SECTION 9

STREET LIGHTING, SIGNALS AND ELECTRICAL SYSTEMS (SL)

9-1 General SL-1
9-2 Traffic Signals SL-1
9-3 Maintaining Existing and Temporary Electrical Systems SL-1
9-4 Foundations SL-2
9-5 Standards, Steel Pedestals and Posts SL-2
9-6 Conduit Material SL-2
9-7 Conduit Installation SL-2
9-8 Pull Boxes SL-2
9-9 Conductors SL-3
9-10 Bonding and Grounding SL-3
9-11 Testing SL-4
9-12 Ground SL-4
9-13 Functional Testing SL-4
9-14 Emergency Vehicle Preemption Equipment SL-4
9-15 Vehicle Signal Faces SL-4
9-16 Signal Sections SL-5
9-17 Vehicle Detectors SL-5
9-18 Pedestrian Push Button Assemblies SL-6
9-19 Light Emitting Diode (LED) Luminaires SL-7
9-20 Removing Electrical Equipment SL-7
9-21 Battery Backup System SL-7
9-22 Street Lighting SL-8
9-23 Conduit Installation SL-8
9-24 Luminaires SL-8
9-25 Service SL-9
9-26 Pull Boxes SL-9
9-27 Conductors SL-9
9-28 Photoelectric Conduits SL-10
9-29 Conduit SL-10
9-30 Electrical Equipment and Work SL-10
9-31 Foundations SL-10
9-32 Poles SL-10
A. Galvanized Steel Poles SL-10
B. Aluminum Poles/Concrete Poles SL-10
9-33 Wiring SL-10
9-34 Fuses SL-11
9-35 Service SL-11
9-36 Painting SL-11
9-37 Cleanup SL-12
9-38 Acceptance Test SL-12
9-39 Street Lighting Details SL-13

PENDING FINAL REVIEW

[THIS PAGE INTENTIONALLY LEFT BLANK]

SECTION 9
STREET LIGHTING, SIGNALS AND ELECTRICAL SYSTEMS (SL)

9-1 **GENERAL** - All improvements within the City of Lincoln will be approved and permitted by the City, and will conform to the City of Lincoln Design Criteria & Procedures Manual. Street lighting, traffic signals and electrical systems will be installed in strict accord with the approved project improvement plans, these Public Facilities Improvement Standards, Caltrans Standard Plans and Standard Specifications, and as recommended by the material manufacturer.

Should conflicts arise between documents, the approved project improvement plans will govern over these Public Facilities Improvement Standards, these Public Facilities Improvement Standards will govern over the Caltrans Standard Specifications. In the event of conflict between applicable documents and/or plans, the most restrictive will prevail.

The manufacturer's guidelines for all materials to be used on the project will be present on the construction site always.

Developers/Contractors will comply with all applicable City, County, State, and Federal laws and regulations relating to construction of the improvements as required.

If the City Engineer determines that any work on private or public property constitutes a hazard to the health, safety, or welfare of the public; endangers property; adversely affects the safety, use or stability of adjacent property; an overhead or underground utility, or a public way, watercourse or drainage channel; or could adversely affect the air quality; or the water quality of any water bodies or water courses; the City Engineer may issue a stop work notice to the owner of the property upon which the condition is located, or other person or agent in control of such property. Upon receipt of such stop work notice, the recipient will, within the period specified therein, stop all work, obtain any necessary permits and conform to the requirements identified in the stop work notice. The City Engineer may require the submission of plans or other reports, detailed construction recommendations, studies, or other engineering data prior to and about any corrective or proposed work or activity.

Street trees shall be placed as follows: No street trees are allowed within 25 ft of street lights on arterial, collector or commercial streets. No street trees within 15 ft of street name, stop or yield signs at curb returns and intersections on residential streets. Distance shall be measured from center of trunk to center of sign post or street light pole. Refer to Section 8 of the City Improvement Standards for additional information.

All improvements within the City of Lincoln will be performed by a contractor licensed in accordance with the California Contractors State License Law, Business and Professions Code Section 7000 et seq.

All persons, firms, partnerships, or corporations doing business of any nature in the City of Lincoln will have a current Business License as stated in Chapter 5.04-License Tax, City of Lincoln Municipal Code. This includes developers, engineers, and contractors.

PENDING FINAL REVIEW

Refer to the City of Lincoln's Design Criteria & Procedures Manual for design information.

9-2 **TRAFFIC SIGNALS** - Sections 9-3 through section 9-20 apply to traffic signal installations.

9-3 **MAINTAINING EXISTING & TEMPORARY ELECTRICAL SYSTEMS** - Roadway closures requiring restrictions of turning movements and/or signal red flash operations at signalized intersections will not be allowed without the written consent of the City Engineer.

9-4 **FOUNDATIONS** - Placement (location) of all traffic signal foundations will be verified by the City Engineer prior to installation.

Signal pole anchor bolts will be aligned to ensure a maximum mast arm offset of 2-degrees from perpendicular to the roadway.

9-5 **STANDARDS, STEEL PEDESTAL AND POSTS** - Install signal heads with 4 or more sections on display using these criteria:

1. 4-section display will be SV-1-T or SV-2-T mounted and the pole will be 13-feet in height. A PVC cap will be provided as a pole cap.

2. 5-section display will be SV-1-T or SV-2-T mounted and the pole will be 14-feet in height. A PVC cap will be provided as a pole cap.

3. Field welding will not be permitted without the permission of the City Engineer. Only persons certified by the pole manufacturer will perform any welding on traffic signal or lighting poles in the City's right of way.

9-6 **CONDUIT MATERIAL** - All conduits will be gray PVC, schedule 40 (min.). All conduits will be at least 2-inches and no more than 3-inches in diameter.

9-7 **CONDUIT INSTALLATION** - All trenches in existing streets will be constructed in accordance with these standards:

All new conduits placed in the roadway, except for the conduit between the detector hand hole and the first pull box, will be buried at a depth of 30-inches below finish grade or 18-inches below finished sub grade.

Unless otherwise specified, all signal interconnect will be installed using 2-inch conduit with 2-foot radius, 90 degree sweeps into No. 6 pull boxes. The bell end of the sweep will be in the pull box.

After conductors, have been installed, the ends of the conduit will be sealed with a duct seal type of sealing compound.

The trench will be a maximum of 6-inches wide and 2-inches wider than the outside diameter of the conduit to be installed. There will be a minimum of 1-inch clearance between the conduit and the trench wall.

PENDING FINAL REVIEW

The trench will be backfilled with Class 2 aggregate base, or controlled density fill (see Section 3-9 for details).

9-8 **PULL BOXES** - Pull boxes will not be placed in a handicap ramp area. The bottom of pull boxes will be bedded in 6-inches of clean crushed rock. The pull box rim will be 1-inch above finish grade in unpaved areas.

Conduit termination in the pull box will be a minimum of 2-inches from the sides of the box, 2-inches above the crushed rock, and at least 8-inches below the bottom of the pull box cover. Conduit will enter and exit the pull box quadrants relative to the direction of the run.

Unless otherwise noted, all pull boxes will be sized to a minimum of No. 5.

Pull box covers will read "TRAFFIC SIGNAL" except pull boxes used solely for traffic signal interconnect which will read "SIGNAL INTERCONNECT".

All pull boxes to be abandoned will be removed and the hole backfilled and compacted with similar material as the surrounding material.

9-9 **CONDUCTORS** - Conductor installation in new conduits will be limited to 26% fill of the conduit maximum area. Conductors installed in existing conduits will be limited to 33% fill of the maximum area.

Equipment grounding conductor will be No. 8 jacketed copper.

Conductors will be identified and marked at each terminal point or as directed by the City Engineer. Conductor for each vehicle and pedestrian phase will be bundled together and banded with plastic tie-wrap labels in all pull boxes and controller cabinet.

Multiple circuit conductors are not permitted.

Signal interconnect cable will consist of six pairs, No. 20 stranded copper conductors. Each pair will be wrapped with an aluminum polyester shield. No splicing of signal interconnect cable is allowed.

Six feet of slack of signal interconnect cable will be provided at each pull box. Fifty feet of slack will be provided in the home run pull box.

Ends of spare conductors will be taped and water sealed with Scotch Kite or approved equal.

Field conductor wiring will not be doubled up on any single wire connector. For conductor wire sizes, larger than No. 10, connections will be spliced using “c” shaped compression connectors as shown in the Caltrans Standard Plans.

9-10 **BONDING AND GROUNDING** - Grounding jumper will be attached by 3/8-inch or larger galvanized bolt in the signal standard or controller pedestal and will be run to the conduit, ground rod or bonding wire in adjacent pull box. Grounding jumper will be visible after cap has been placed on foundation. All ground connections will be watertight.

PENDING FINAL REVIEW

Grounding electrodes will be of copper clad steel rod, not less than 5/8-inch in diameter and 8-feet in length.

A grounding electrode will be installed in all electrical services and controller foundations. They will be spaced a minimum of 6-feet apart.

The grounding electrode rod in the controller assembly will be paralleled with the grounding electrode rod in the service. This connection will consist of a continuous solid No. 6 jacketed conductor. The ground connection will be on the line side of the electrical entrance terminal block.

A continuous No. 6 jacketed copper conductor will connect the ground bus in the electrical service, the grounding electrode in the service, the grounding electrode in the controller, and the ground entrance lug in the controller cabinet.

The equipment-bonding conductor for all standards will be visible and accessible after completion of work.

9-11 **TESTING** - The contractor will contact the City Engineer at least five business days prior to installation of a tested controller assembly and/or electrical service.

9-12 **GROUND** - Before electrical power can be connected, the grounding electrode will be tested for earth ground resistance. The City Engineer will observe this ground resistance testing. The earth ground resistance will be a maximum of 5-ohms.

9-13 **FUNCTIONAL TESTING** - During interconnect cable installation, the Contractor will, in the presence of the City Engineer, perform a high resistance to ground test, DC resistance test and a dB attenuation loss test. The Contractor will supply factory specifications prior to the test. The Contractor will notify the Engineer at least 48-hours prior to interconnect cable installation.

Power interruption and/or damage caused by the public which causes a shutdown to the electrical system will not constitute a discontinuous functional test.

9-14 **EMERGENCY VEHICLE PREEMPTION EQUIPMENT** - The Contractor will supply emergency vehicle preemption equipment, including the required cabling from the optical detector to the discriminator in the controller cabinet assembly.

Where existing signals are being modified, and said signals are already equipped with emergency vehicle preemption equipment, the Contractor will perform any necessary remodel and reinstallation of said equipment as required by the plans or as directed by the City Engineer.

Preemption cables will be labeled in the following manner:

Phase 2 & 5 single gray band
Phase 4 & 7 double gray band
Phase 1 & 6 triple gray band
Phase 3 & 8 quadruple gray band

PENDING FINAL REVIEW

Labels will consist of banded colored tape visible at the preemption detector, signal standard hand hole, adjacent pull box and the controller cabinet. Cables in the Controller Cabinet will have tie wrap labels with appropriate phasing descriptions.

9-15 **VEHICLE SIGNAL FACES** - All signal faces will be aluminum. Mountings for MAT and MAS signal sections will be bronze metal. Signal faces will have 12-inch LED displays, unless otherwise specified.

9-16 **SIGNAL SECTIONS** - All signal sections will be 12-inch mold-cast aluminum.

All vehicle signal sections will include aluminum back plates with perforated louvers.

Pedestrian signals will be aluminum Type "A" with international symbols. Pedestrian head mounts will be clam shell type with bronze mounting hardware. Mounting will include one Allen head screw for opening and all wiring will be quick connect type (plug in).

Pedestrian heads will be mounted on the intersection side of the signal pole unless otherwise directed by the City Engineer.

Terminal compartments (TV & SV) and mast arm slip fitters (MAS & MAT) will be bronze.

Signal mast arm mounted, four (4) section displays will be type MAS-4C.

Extra support will be incorporated whenever the use of a SV-3-TA, SV-3-TB display or if any display on a side mount is larger than a 3-section 12-inch display.

The extra support method will consist of a 1-inch stand-off with 1-1/4-inch x 20 threaded hole. The stand-off will be banded to the signal standard, 3-inchs below the bottom of the top slip fitting of the display's 1-1/2-inch riser. A ¼-inch hole will be drilled in the center of the 1-1/2-inch riser to match the position of the thread hole on the stand-off. The riser will be attached to the standoff with a 1/4-inch x 20 bolt, which will include a lock washer and flat washer.

All signal display mounting assembly top members will be watertight. The watertight sealing method will be a ½-inch thick layer of clear silicone around the top jointing member of all displays. Additional sealant will be installed in the same manner on all plugs installed in the top of any signal display. Rubber washers used for water-sealing the top assembly will not be permitted on any display framework or MAT mounting.

All MAT mounted signal displays will have only one serrated washer installed between the lock nut and the display.

Seal all MAT and MAS mounts will be sealed with approved clear silicone around the tenon attachment area, including the through bolt and tenon openings.

The sealant will be 35-year rated. There will be no substitution for the silicone sealant.

A terminal compartment will be installed on the signal pole at the vehicle display position, when no display is to be installed on that side of pole. All signal display wiring from the signal mast arm will terminate at this location.

PENDING FINAL REVIEW

9-17 **VEHICLE DETECTORS** - The first detector at the limit line will be inductive loop detector Type "Q." All other vehicle detectors will be inductive loop detector Type "A."

Loop wire will be Type 1, RHW-USE, neoprene-jacketed, cross-linked polyethylene insulated, and No. 12 stranded copper.

Lead-in cable will be Type B copper. Tinned copper will not be permitted.

Vehicle detector hand holes will be Type ”B".

Exclusive right tum loops will be type "A" loops.

The City Engineer will verify all loop locations prior to saw cutting. The contractor will give 48-hours’ notice prior to loop verification.

Loop wires will be labeled in the following manner:

Lane 1 -	black
Lane 2 -	red
Lane 3 -	blue
Lane 4 -	white
Lane 5 -	yellow
Right turn lane -	orange

1. Labels will consist of banded colored tape visible in the pull boxes, where the loop wire is spliced to the detector lead-in cable.

2. Loop detectors will be clearly marked to reference their location in relation to the limit lines and lane. The loop closest to the crosswalk in the left most lane will be labeled as loop number 1-1. The second loop in the same lane will be labeled 1-2, and so on.

3. The start and end leads of a loop detector will be clearly marked by a means of plastic tie wrap labels.

During loop installation, the Contractor will, in the presence of the City Engineer, perform a high resistance test and an inductive reactance test. The contractor will notify the City Engineer at least 48-hours prior to loop installation.

All wires for each detector loop will terminate in the nearest pull box, not the hand hole.

Lead-in cables will not be spliced between the termination point (the pull box adjacent to loop detectors) and the controller cabinet terminals.

Adjacent loops on the same sensor unit channel will be wound in opposite directions. All loops will be wound in a manner such that any adjacent loop will be wound in the opposite direction. The loop at the limit line, closest to the center median (lane 1), will be wound in a clockwise direction. The next loop back in the same lane will be wound in a counter-clockwise direction and so on. The loop detector in lane 2 closest to the limit line, will be wound in a counterclockwise direction.

PENDING FINAL REVIEW

9-18 **PEDESTRIAN PUSH BUTTON ASSEMBLIES** - Pedestrian push buttons will be aluminum type with metal international symbol signs. Push buttons will meet all Americans with Disabilities Act (ADA) guidelines and be placed 42-inches above the grade of the closest edge of sidewalk. The push button will be mounted parallel to the crosswalk direction it serves. The assembly will also provide a two-tone audible confirmation in addition to the visual countdown confirmation. Refer to the Caltrans Division of Construction Permanent Pedestrian Facilities ADA Handbook.

9-19 **LIGHT EMITTING DIODE (LED) LUMINAIRES** - Unless otherwise noted, all luminaries at signalized intersections will be Light Emitting Diode (LED) Luminaires and will comply with Caltrans Standard Specification Section 86.

9-20 **REMOVING ELECTRICAL EQUIPMENT** - All existing traffic control devices, lighting devices, signs, and equipment to be removed and not reused in the work will be salvaged, unless otherwise specified or directed by the City Engineer. Salvageable equipment will remain the property of the City. Equipment determined to be unsalvageable by the City Engineer will become the property of the Contractor. The Contractor will deliver salvaged equipment to the City's Corporation Yard or other location determined by the City Engineer.

Damaged conduits deemed to not be reusable will be removed from existing pull boxes and ends plugged solid with grout. Existing conductors will be removed from said conduits prior to plugging. Contractor will dispose of said conductors.

Conduits abandoned for reuse will have all conductors removed, the conduit blown out, and installation of a No. 10 green locator wire prior to sealing and capping the conduit.

9-21 **BATTERY BACKUP SYSTEM** – Unless otherwise specified, all traffic signals will be equipped with a battery backup system and will conform to Caltrans Transportation Electrical Equipment Specifications (TEES) Chapter 4 – Battery Backup System, latest edition. The battery backup system will include an inverter/charger, power transfer relay, manually operated non-electric bypass switch, and all necessary hardware and interconnect wiring.

9-22 **STREET LIGHTING** - Sections 9-23 through section 9-38 apply to street lighting installations.

9-23 **CONDUIT INSTALLATION** - All trenching for street lighting conduits in existing streets will be constructed in accordance with these standards:

All new conduit placed in the roadway will be buried at a depth of 30-inches below finish grade or 18-inches below finished sub grade.

After conductors, have been installed, the ends of the conduit will be sealed with a duct seal type of sealing compound. The trench will be a maximum of 6-inches wide and 2-inches wider than the outside diameter of the conduit to be installed.

There will be a minimum of 1-inch clearance between the conduit and the trench wall.

PENDING FINAL REVIEW

The trench will be backfilled and compacted with Class 2 aggregate base, concrete slurry or Class B concrete.

9-24 **LUMINAIRES** - The type of street light and the appropriate wattage will be specified on the plans. The luminaires will be Light Emitting Diode (LED) type with internal ballasts.

Unless otherwise specified, luminaries will be installed per the tables below:

Street Classification	Type Street Light	Normal Mounting Height	LED Wattage [a]	Spacing (One side only)[b]
Minor Residential	B	14'	40	125
Primary Residential	B	14'	40	125
Collector	A	30'	60	[e]
Industrial/Commercial	A	30'	73	[e]
Minor Arterial	A	30'	60	[e]
Major Arterial	A	30'	60	[e]
Special Thoroughfare	A	30'	73	[e]

Street Classification	Avg. Maintained Foot Candles [c,d]	Avg.:Min ratio (Commercial)	Avg.:Min ratio (Residential)
Minor Residential	0.15		
Primary Residential	0.15		
Collector	0.26	4:1	5:1
Industrial/Commercial	0.26	4:1	
Minor Arterial	0.35	4:1	5:1
Major Arterial	0.56	4:1	
Special Thoroughfare	0.56	4:1	

a. Lamp wattage is for LED only. Design criteria must be submitted for all other lamps.
b. Spacing may be adjusted by ± 20% to accommodate driveways and intersections.
c. Lumens used to calculate the average maintained foot-candle will be based on a 0.8 maintenance factor of initial lumen value as rated by the lamp manufacturer.
d. Light distribution pattern will be Type III with house side of shield unless otherwise specified.
e. Light spacing shall be determined by photometric diagram.

9-25 **SERVICE** - All street light systems will have underground service provided. Service points will be provided within a utility easement immediately adjacent to or within the right-of-way and will be open and easily accessible to the street frontage. Types of service are as follows:

1. A direct underground service consists of one or two lights being served from a single service point. The service point may be in the form of a service pedestal provided by the developer.

2. Multiple service is three or more lights being served from a single service point installed by the developer. The service point will be a pull box. Multiple systems will have a service cabinet located adjacent to the service point between the service point and the light system.

9-26 **PULL BOXES** - All pull boxes, including the size, will be shown and identified on the plans. Pull boxes will be sized to a minimum of No. 5 or No. 6 unless approved by the City Engineer or his/her designee.

Pull boxes will be installed at the following locations:

PENDING FINAL REVIEW

1. Where more than two conduit runs intersect;
2. Where conduit runs are more than 250 feet long;
3. Where shown on the Standard Details;
4. At critical angle points;
5. Behind each light when No. 4. is used;
6. Locations ordered by the City Engineer.

9-27 **CONDUCTORS** - All conductors, including quantity and size, will be identified on the plans. Unless otherwise specified, conductors will be single conductor, solid, or stranded copper, sized in accordance with these Standards and the National Electric Code.

A. On a direct underground service, the minimum conductor will be between a No. 8. and No. 4 conductor.

B. On multiple services, the minimum conductor size from the service point to the service will be No. 8 AWG. The voltage drop along each circuit will not exceed 7% for 2 wire systems and 6% for 3-wire system of the nominal service voltage to the farthest luminaire. The nominal service voltage to be used is 115 volts. Calculations will be submitted substantiating the design criteria for every circuit. Calculations will also be submitted showing the total load in amperes of each circuit at the service cabinet.

Where only one photocell is required in a multiple service system, it will be connected to the service can with three No. 14 conductors.

9-28 **PHOTOELECTRIC CONTROLS** - A single photoelectric receptacle will be provided on the luminaire nearest to the service point for multiple services containing four or more lights. All other light systems will have a photocell in each luminaire. Photocells shall have a rated life of at least 20 years (or as approved by the City Engineer).

9-29 **CONDUIT** - All conduit runs will be shown and identified on the plans, including conduit size.

For a system designed using the 3-wire principle, only 2 circuits (one set of 3 wires) are allowed in any conduit. Further circuits based on 2-wire principle and 3-wire principle will not be mixed in any conduit. All circuits may, however, be mixed in same conduit from cabinet to first pull box.

The design may include more than two circuits in a conduit if the conductors for each circuit (2-wire) or set of conduits (3-wire) are identified by conductor insulation which is a solid color or a basic color with a permanent colored stripe. The identification stripe will be continuous over the entire length of the conductor.

9-30 **ELECTRICAL EQUIPMENT AND WORK** - Control and switching equipment and fusing of all circuits will meet the requirements of the National Electrical Code, the Basic Electrical Regulations, Title 24, Part 3, of the California Administrative Code, the rules of the National Fire Protection Agency, and the City of Lincoln.

PENDING FINAL REVIEW

9-31 **FOUNDATIONS** - Foundations for poles, posts, and pedestals will conform to Section 86–6.02 of the State Specifications except as herein modified. Standard bases will conform to the sizes show on the drawings or as detailed on the plans. All concrete will be Class "A".

9-32 **POLES** - All poles will be galvanized steel or concrete. The type of standard will be as shown on the plans or in the Special Provisions.

A. Galvanized Steel Poles - Type "A" street lights will use the "A" series poles as detailed on the drawings. Galvanizing will be as provided in Section 75-1.02B, "Galvanizing", of the State Standard Specifications. Galvanized Steel Poles will only be used in Industrial Streets and/or Special Thoroughfares as determined by the City Engineer and/or Community Development Director.

B. Concrete Poles - Concrete lighting poles will conform to the American Association of State Highway and Transportation Officials (AASHTO) "Standard Specifications for Structural Supports for Highway Signs, Luminaires, and Traffic Signals", and these Standards.

9-33 **WIRING** - Wiring for street lighting will conform to Section 86 of the State Standard Specifications, except as herein modified. The use of heat shrinkable insulating tubing is not allowed. Splice insulation on 600-volt conductor splices of solid or stranded conductor of No.14 to No. 6, the Contractor may use, at his option, an electrical spring connector of three-part construction. The three-part construction will consist of a zinc coated free expanding steel spring enclosed in a shell, with an outer jacket of polyvinyl chloride. The outer jacket will have a flared skirt, be flexible, and able to withstand 105-degree centigrade temperatures continuously. Each piece must have the spring connector sized in accordance with the manufacturer's recommendations for the number of conductors and gauges being spliced. Wire strip lengths will also be in accordance with the manufacturer's recommendations. The splice will be coated (by submersion) with a corrosive-resistant, solvent-resistant, sealing/bonding, flexible electrical coating, having at least 100-volt/mil electrical strength after the spring connector has been applied to the connection. Upon coating of the splice, the flared skirt end will be positioned in an upright alignment and maintained there until the electrical coating is dry. In addition to the requirements of Section 86-1.02N, "Fused Splice Connectors", of the State Standard Specifications, the standard midget ferrule type fuse will be further interpreted as being rated at 30-amps at 600-volts.

9-34 **FUSES** - Luminaires with up to 175-watt bulbs will have 6-amps fuses installed. All fuses will be the fast blowing type.

9-35 **SERVICE** - The service will conform to the provisions of Section 87 of the State Standard Specifications, except as herein modified. The service will be a three-wire No. 5 or as shown on the plans and drawings. It will contain main breakers, auxiliary breakers, test switch, and contactor in accordance with the drawings. The contractor will supply three No. 14 conductors from the service pedestal to the photoelectric unit. The location of service points will be as shown on the plans with the concurrence and approval of the serving utility.

All components within the service box will be clearly marked with the manufacturer's name and part number with a metallic or permanently marked engraved stencil for future

PENDING FINAL REVIEW

identification. All control and switching equipment and fusing of the circuits will meet the requirements of the National Electrical Code, the Electrical Safety Orders of the Industrial Accident Commission of the State of California, the rules of the National Fire Protection Agency, and the City of Lincoln.

9-36 **PAINTING** - Painting of electrical equipment and materials will conform to the provisions in Section 59, "Structural Steel Coatings", of the State Standard Specifications, with the following additions and modifications:

A. Paint material for electrical installations, unless otherwise specified, will conform to the provisions in Section 91, "Paint", of the State Standard Specifications. Color will be Pantone Color 363.

B. In lieu of the temperature and seasonal restrictions for painting as provided in Section 59, "Structural Steel Coatings", of the State Standard Specifications, paint may be applied to equipment and materials for electrical installations at any time approved by the City Engineer.

C. All ferrous surfaces to be pained will be cleaned as provided in Section 59, "Structural Steel Coatings", of the State Standard Specifications prior to applying the vinyl wash primer or prime coat. Blast cleaning of galvanized metal surfaced in good condition, as determined by the City Engineer, will not be permitted.

D. Existing equipment to be painted in the field will be washed with a stiff bristle brush using a solution of water containing 2-tablespoonfuls of heavy-duty detergent powder per gallon. After rinsing, all surfaces higher than 8-feet above ground level will be wire brushed with a coarse, cup shaped, power driven brush to remove all poorly bonded paint, rust, scale, corrosion, grease, or dirt. Any dust or residue remaining after wire brushing will also be removed prior to priming. All surfaces between the ground level and 8-feet in height will have all paint, rust, scale, corrosion, grease, and dirt removed to bare metal.

E. Immediately after cleaning, all bare metal in corrosive atmospheres, all galvanized surfaces, and all nonferrous metal surfaces will be coated with Pre-Treatment, Vinyl Wash Primer followed by two prime coats of Zinc Chromate Primer for metal in non-corrosive atmospheres. Pre-Treatment, Vinyl Wash Primer may be omitted on bare metal surfaces and the prime coats will be applied immediately after cleaning.

F. Equipment previously finished as specified will be given a spot-finishing coat on newly primed areas, followed by a finishing coat over the entire surface.

G. All paint coats may be applied either by hand brushing or by approved spraying machine in the hands of skilled operators. The work will be done in a neat and workmanlike manner. The City Engineer reserves the right to require the use of brushes for the application of paint should the work done by the paint spraying machine prove unsatisfactory or objectionable, as determined by the City Engineer.

9-37 **CLEANUP** - During the progress of the work, the Contractor will keep the entire job site in a clean and orderly condition. Spillage resulting from hauling operations along or across existing streets or roads will be removed immediately by the contractor.

PENDING FINAL REVIEW

9-38 **ACCEPTANCE TEST** - After completion of the installation of the street lights the contractor will test all streetlights in the presence of the City Engineer. The contractor will furnish all material and equipment for such testing. The street light system will be energized for a period of one hour per circuit. The test will identify light distribution patterns; acceptability of the ballasts, fixtures, and lamps for electrical and noise standards; to verify that all connections are electrically and mechanically sufficient; and other purposes as directed by the City Engineer.

PENDING FINAL REVIEW

STREET LIGHTING DETAILS

Street Light Pole and Symbols SL-1
Foundation Location Street Lights SL-2
Street Light Service Wiring Diagram SL-3
Service Cabinet and Meter Socket Front View SL-4
Service Cabinet and Meter Socket Side View and Notes SL-5

PENDING FINAL REVIEW

[THIS PAGE INTENTIONALLY LEFT BLANK]

	STREET LIGHT TYPE	NORMAL MOUNTING HEIGHT	LED WATTAGE[a]	SPACING (ONE SIDE ONLY)[b]	AVG MAINTAINED FC[c,d]	AVG: MIN RATIO (COMMERCIAL)	AVG: MIN RATIO (RESIDENTIAL)
MINOR RESIDENTIAL	B	14'	40	125	0.15		
PRIMARY RESIDENTIAL	B	14'	40	125	0.15		
COLLECTOR	A	30'	60	e	0.26	4:1	5:1
INDUSTRIAL/COMMERCIAL	A	30'	73	e	0.26	4:1	
MINOR ARTERIAL	A	30'	60	e	0.35	4:1	5:1
MAJOR ARTERIAL	A	30'	60	e	0.56	4:1	
SPECIAL THOROUGHFARE	A	30'	73	e	0.56	4:1	

a. LAMP WATTAGE IS FOR LED ONLY. DESIGN CRITERIA MUST BE SUBMITTED FOR ALL OTHER LAMPS
b. SPACING MAY BE ADJUSTED BY ±20% TO ACCOMMODATE DRIVEWAYS AND INTERSECTIONS.
c. LUMENS USED TO CALCULATE THE AVERAGE MAINTAINED FOOT-CANDLE SHALL BE BASED ON A 0.8 MAINTENANCE FACTOR OF INITIAL LUMEN VALUE AS RATED BY THE LAMP MANUFACTURER.
d. LIGHT DISTRIBUTION PATTERN SHALL BE TYPE III WITH HOUSE SIDE SHIELD UNLESS OTHERWISE SPECIFIED.
e. LIGHT SPACING SHALL BE DETERMINED BY PHOTOMETRIC DIAGRAM.

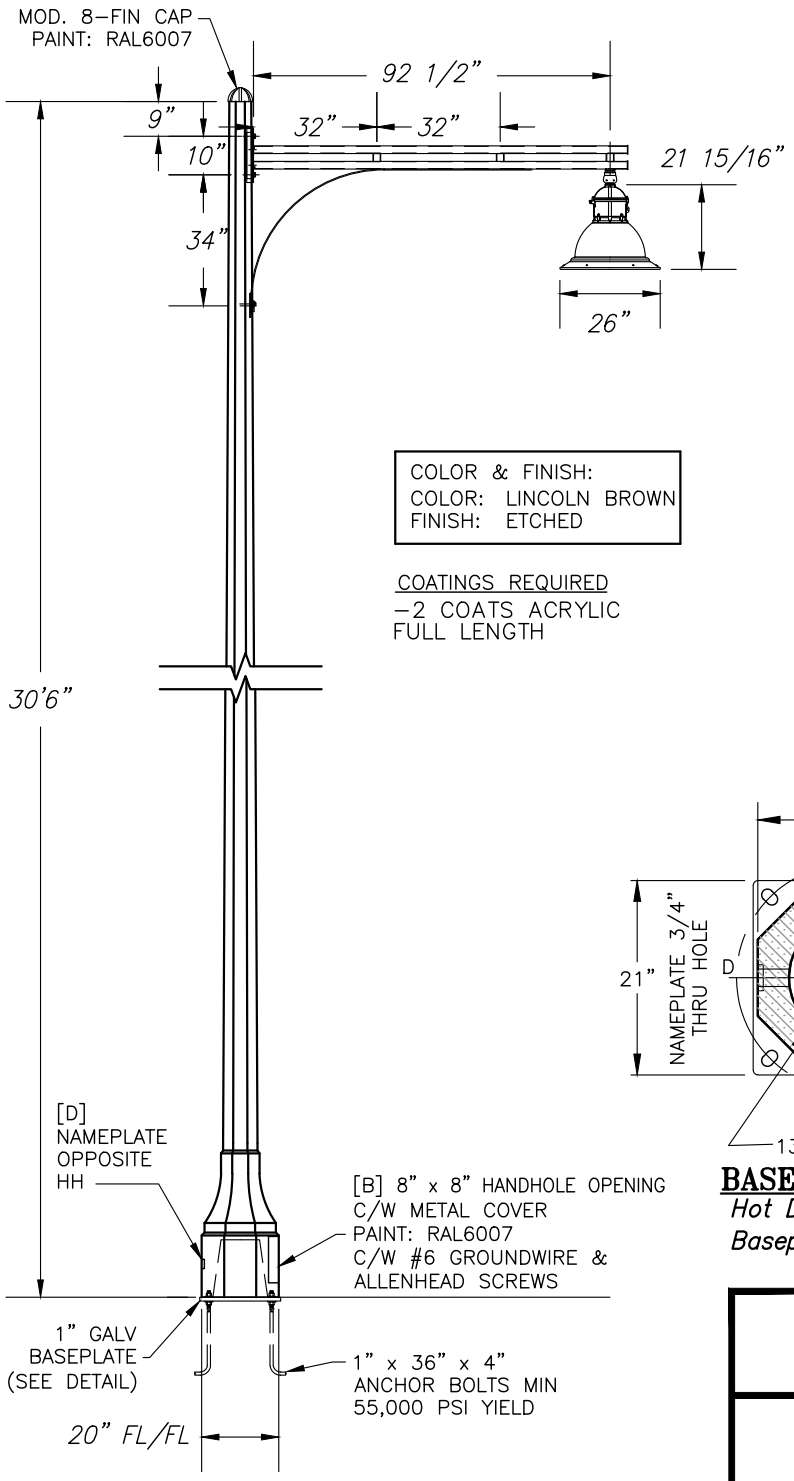

COLOR & FINISH:
COLOR: LINCOLN BROWN
FINISH: ETCHED

COATINGS REQUIRED
-2 COATS ACRYLIC
FULL LENGTH

LUMINAIRE SPECIFICATIONS

CATALOG NO.:	K829-P4FL-III-60(SSL) -8060-120:277V-KPL10
OPTICAL SYSTEM:	FLAT ARRAY, FLAT LENS
IES LTG. CLASS.:	TYPE III
WATTAGE:	60W SOLID STATE LIGHTING
SERIES:	8060
CCT/DIODE:	4000K/HE5
LINE VOLTAGE:	120:277V
PAINT:	RAL6007
OPTIONS:	KPL10 LEVELING DEVICE

ARM SPECIFICATIONS

CATALOG NO.:	SPECIAL KA55-S-8'
MATERIAL:	ALUMINUM
PAINT:	RAL6007

POLE SPECIFICATIONS:

CATALOG NO.:	KCT2-30.5-G-E43-FBP C/W FC
SECTION:	OCTAGONAL
COLOR:	LINCOLN BROWN
FINISH:	ETCHED
POLE TOP:	5 11/16" FL/FL
POLE BUTT:	20" FL/FL
POLE LENGTH:	30' 6"
APPROX. WGT.:	1820 LBS
MIN RACEWAY:	1 1/8" ø
ANCHOR BOLTS:	(4) 1" x 36"
MIN. YIELD STRENGTH:	55,000 psi
OPTIONS:	STANDARD LIFETIME WARRANTY STANDARD MIN. 8000PSI CONCRETE STRENGTH

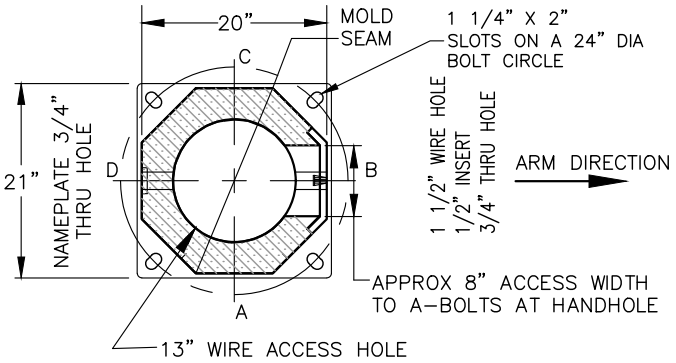

BASEPLATE DETAIL
Hot Dipped Galvanized
Baseplate 1" x 21" sq

CITY OF LINCOLN
ENGINEERING DEPARTMENT

TEAR DROP
STREET LIGHT

REVISIONS:	DATES:	APPROVED:
		CITY ENGINEER DATE

SCALE: NONE
DATE: SEPTEMBER 2019
DRAWN BY: C.G.

SL-1A

	STREET LIGHT TYPE	NORMAL MOUNTING HEIGHT	LED WATTAGE[a]	SPACING (ONE SIDE ONLY)[b]	AVG MAINTAINED FC[c,d]	AVG: MIN RATIO (COMMERCIAL)	AVG: MIN RATIO (RESIDENTIAL)
MINOR RESIDENTIAL	B	14'	40	125	0.15		
PRIMARY RESIDENTIAL	B	14'	40	125	0.15		
COLLECTOR	A	30'	60	e	0.26	4:1	5:1
INDUSTRIAL/COMMERCIAL	A	30'	73	e	0.26	4:1	
MINOR ARTERIAL	A	30'	60	e	0.35	4:1	5:1
MAJOR ARTERIAL	A	30'	60	e	0.56	4:1	
SPECIAL THOROUGHFARE	A	30'	73	e	0.56	4:1	

a. LAMP WATTAGE IS FOR LED ONLY. DESIGN CRITERIA MUST BE SUBMITTED FOR ALL OTHER LAMPS
b. SPACING MAY BE ADJUSTED BY ±20% TO ACCOMMODATE DRIVEWAYS AND INTERSECTIONS.
c. LUMENS USED TO CALCULATE THE AVERAGE MAINTAINED FOOT-CANDLE SHALL BE BASED ON A 0.8 MAINTENANCE FACTOR OF INITIAL LUMEN VALUE AS RATED BY THE LAMP MANUFACTURER.
d. LIGHT DISTRIBUTION PATTERN SHALL BE TYPE III WITH HOUSE SIDE SHIELD UNLESS OTHERWISE SPECIFIED.
e. LIGHT SPACING SHALL BE DETERMINED BY PHOTOMETRIC DIAGRAM.

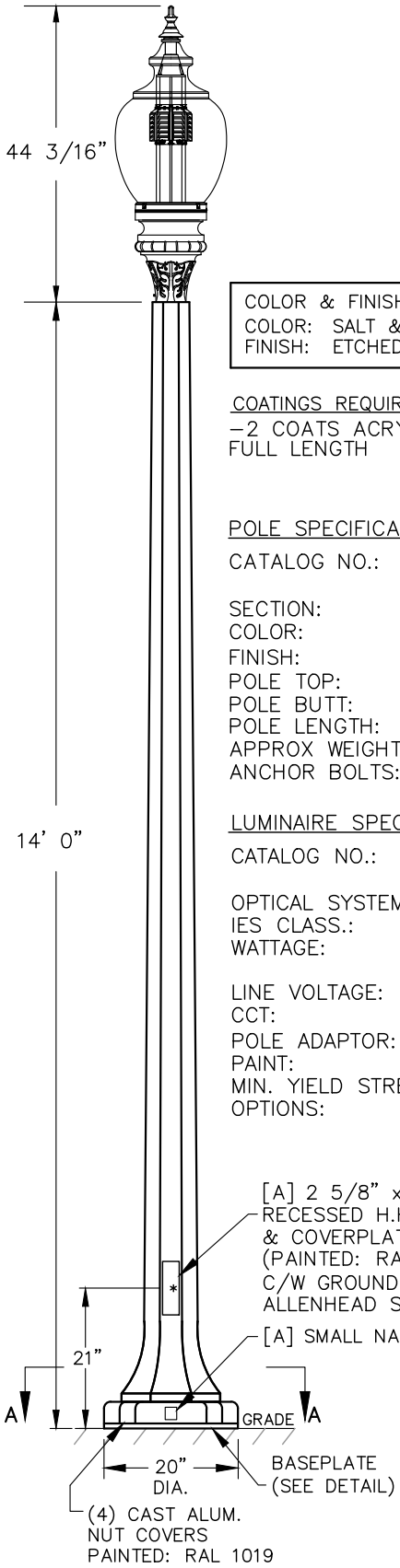

COLOR & FINISH:
COLOR: SALT & PEPPER
FINISH: ETCHED

COATINGS REQUIRED
-2 COATS ACRYLIC
FULL LENGTH

POLE SPECIFICATIONS

CATALOG NO.:	KS14-G-RBP-E30 C/W 140-35/35
SECTION:	OCTAGONAL
COLOR:	SALT & PEPPER
FINISH:	ETCHED
POLE TOP:	5 1/2" FLAT TO FLAT
POLE BUTT:	20" ø
POLE LENGTH:	14' 0"
APPROX WEIGHT:	840 lbs.
ANCHOR BOLTS:	3/4" x 27" (BY OTHERS)

LUMINAIRE SPECIFICATIONS

CATALOG NO.:	K118R-B2AR-III-40(SSL) -1042-120:277V-K13-4K
OPTICAL SYSTEM:	BAFFLED ARRAY ACRYLIC RIPPLED
IES CLASS.:	TYPE III
WATTAGE:	40W (1042 SERIES) SOLID STATE LIGHTING
LINE VOLTAGE:	120:277V
CCT:	4000K
POLE ADAPTOR:	K13
PAINT:	TEXTURED RAL 1019
MIN. YIELD STRENGTH:	55.000 psi
OPTIONS:	STANDARD LIFETIME WARRANTY STANDARD MIN. 8000PSI CONCRETE STRENGTH

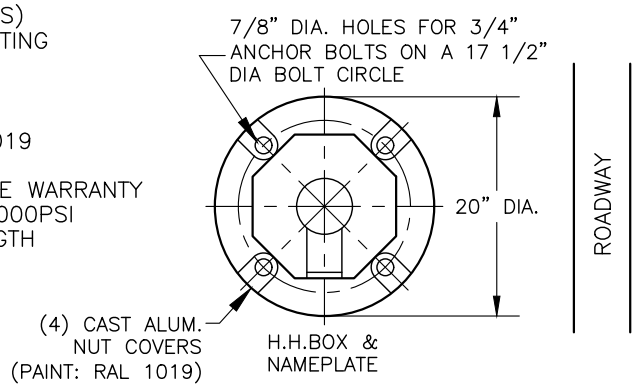

BASEPLATE DETAIL (SECTION A-A)
MAT'L: 3/4" THICK GALV. STL.

CITY OF LINCOLN
ENGINEERING DEPARTMENT

POST TOP STREET LIGHT

REVISIONS:	DATES:	APPROVED:
		CITY ENGINEER DATE

SCALE: NONE
DATE: SEPTEMBER 2019
DRAWN BY: C.G.

SL-1B

POLE TYPE	POLE DATA			
	A HEIGHT	Min OD		WALL THICKNESS
		BASE	TOP	
15	30'–0"	8"	3 11/16"	0.1196"

BASE PLATE DATA				CIDH PILE FOUNDATION	
C	BC = BOLT CIRCLE	THICKNESS	ANCHOR BOLT SIZE	Dia	DEPTH
1'–0"	1'–0"	1 1/2"	1" Á x 36" *	2'–6"	6'–0"

* FOR BARRIER RAIL BOLTS, SEE REVISED STANDARD PLAN RSP ES–6B.

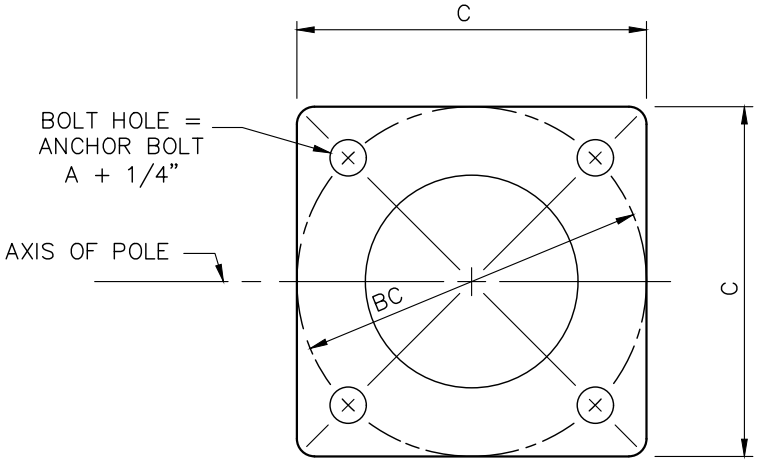

BASE PLATE
DETAIL A

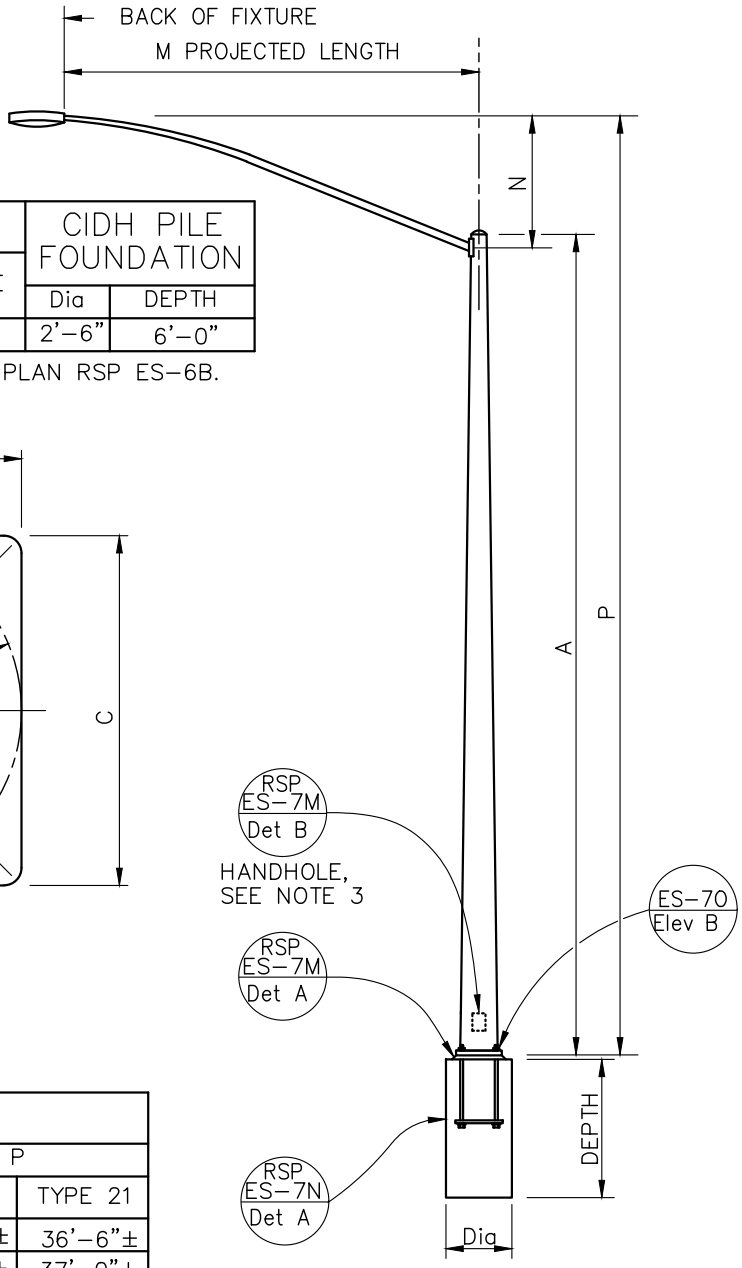

TYPE "15"
ELEVATION A

LUMINAIRE MAST ARM DATA					
M PROJECTED LENGTH	N RISE	Min OD AT POLE	NOMINAL THICKNESS	P	
				TYPE 15	TYPE 21
6'–0"	2'–0"±	31/4"	0.1196"	31'–6"±	36'–6"±
8'–0"	2'–6"±	31/2"		32'–0"±	37'–0"±
10'–0"	3'–3"±	37/8"		32'–9"±	37'–9"±
12'–0"	4'–3"±			33'–9"±	38'–9"±
15'–0"	4'–9"±	41/4"		34'–3"±	39'–3"±

NOTES:

1. ☐ INDICATES MAST ARM LENGTH TO BE USED UNLESS OTHERWISE NOTED ON THE PLANS.
2. FOR TYPE 15–SB, USE TYPE 15 STANDARD WITH TYPE 30 SLIP BASE PLATE DETAILS, SEE STANDARD PLAN ES–6F.
3. HANDHOLE SHALL BE LOCATED ON THE DOWNSTREAM SIDE OF TRAFFIC.
4. FOR ADDITIONAL NOTES AND DETAILS, SEE REVISED STANDARD PLANS RSP ES–7M AND RSP ES–7N.

CITY OF LINCOLN
ENGINEERING DEPARTMENT

CALTRANS "TYPE 15" STREET LIGHTS

REVISIONS:	DATES:	APPROVED:
		CITY ENGINEER DATE

SCALE: NONE
DATE: SEPTEMBER 2019
DRAWN BY: C.G.

SL-1C

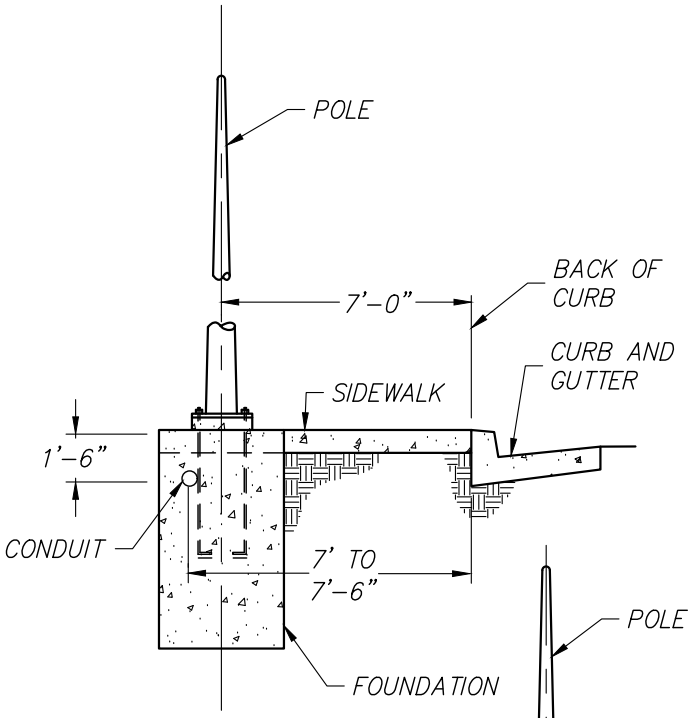

6' SIDEWALK

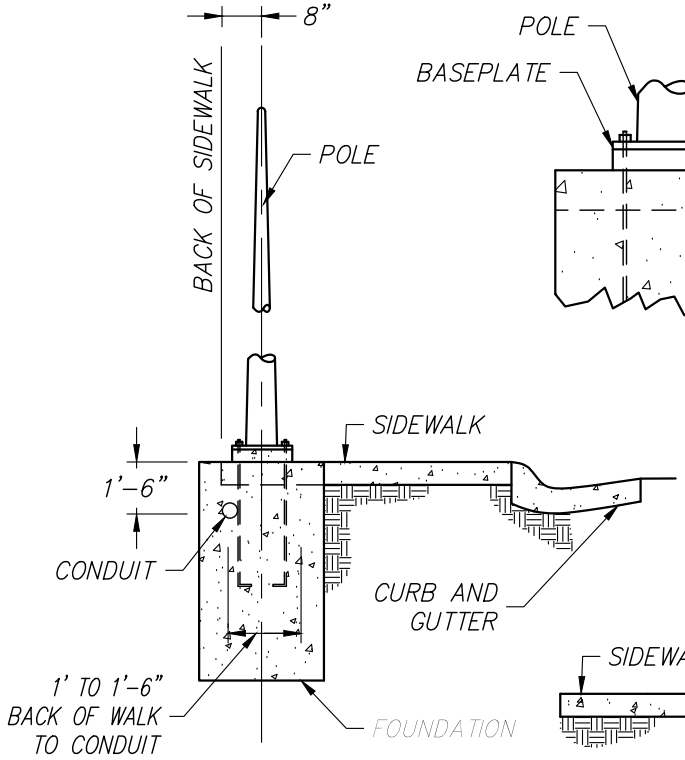

VARIABLE SIDEWALK WIDTH (OVER 6')

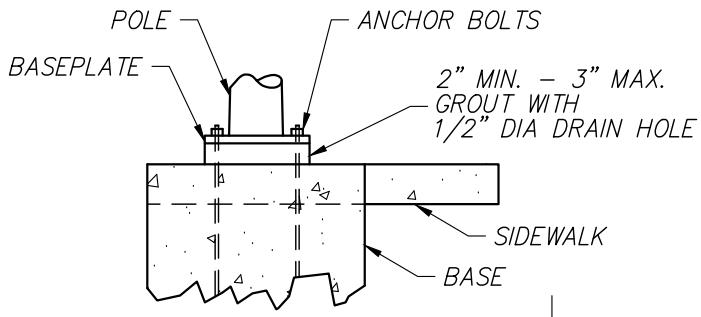

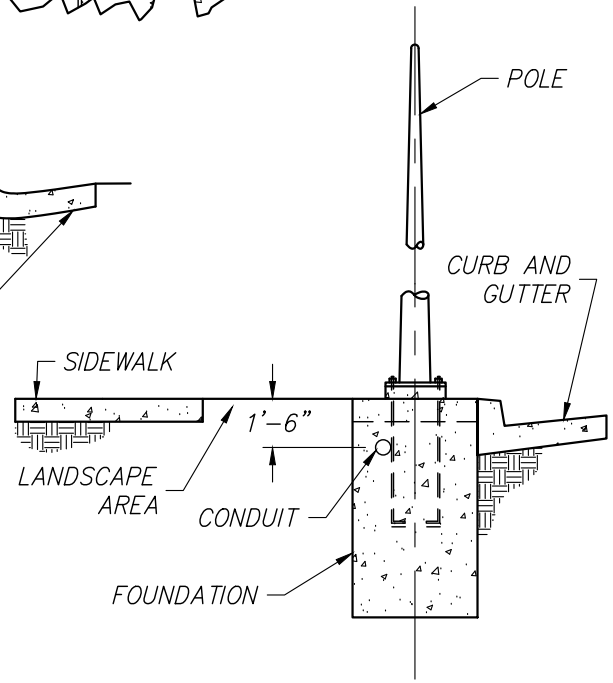

CURB SEPARATED FROM SIDEWALK

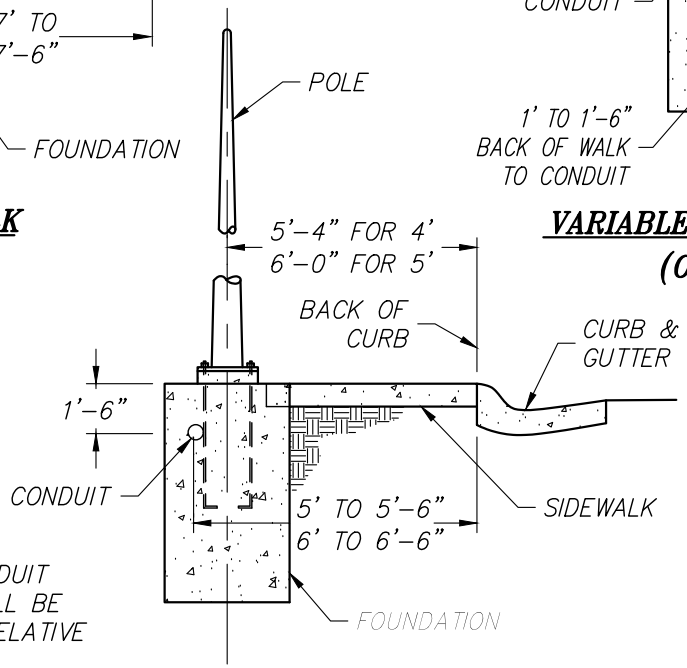

4' & 5' SIDEWALK

NOTES:

1. BEHIND SIDEWALK CONDUIT TRENCH BACKFILL SHALL BE COMPACTED TO 90% RELATIVE COMPACTION.
2. UNDER STREET CONDUIT TRENCH BACKFILL SHALL BE COMPACTED TO 95% RELATIVE COMPACTION.
3. FOUNDATION DIMENSIONS PER IMPROVEMENT PLAN.

REVISIONS:	DATES:	APPROVED:
		CITY ENGINEER DATE

CITY OF LINCOLN
ENGINEERING DEPARTMENT

FOUNDATION LOCATION STREET LIGHTS

SCALE: NONE
DATE: SEPTEMBER 2019
DRAWN BY: C.G.

SL-2

2-WIRE SYSTEM

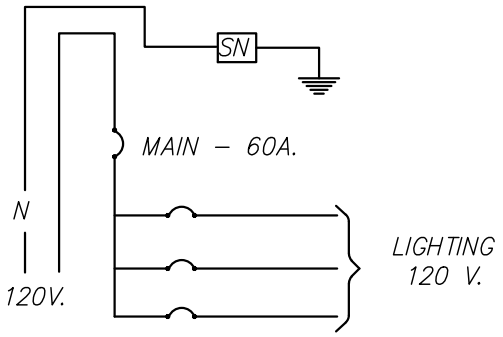

DIAGRAM – A
(UNMETERED)

USE ON MULTIPLE LIGHTING SYSTEMS WITH LESS THAN 4 LIGHTS ON EACH CIRCUIT. ALL LIGHTS SHALL HAVE PHOTO CELLS.

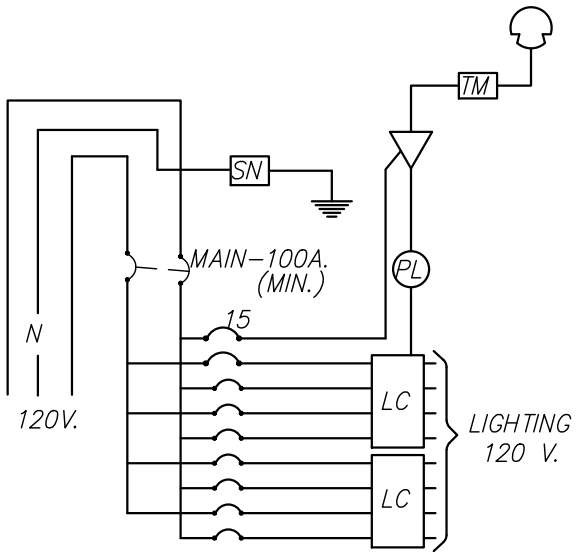

DIAGRAM – C

USE ON MULTIPLE LIGHTING SYSTEMS WITH FOUR OR MORE LIGHTS ON EACH CIRCUIT.

3-WIRE SYSTEM

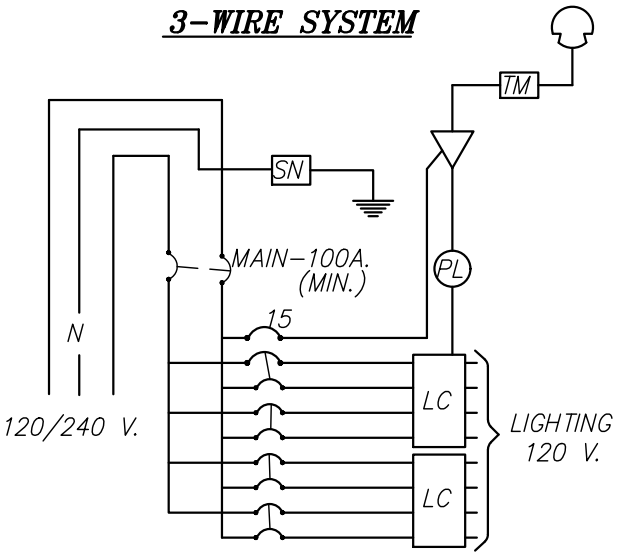

DIAGRAM – E

USE ON MULTIPLE LIGHTING SYSTEMS WITH FOUR OR MORE LIGHTS ON EACH CIRCUIT.

CITY OF LINCOLN
ENGINEERING DEPARTMENT

STREET LIGHT SERVICE WIRING DIAGRAM

REVISIONS:	DATES:	APPROVED:
		CITY ENGINEER DATE

SCALE: NONE
DATE: SEPTEMBER 2019
DRAWN BY: C.G.

SL-3

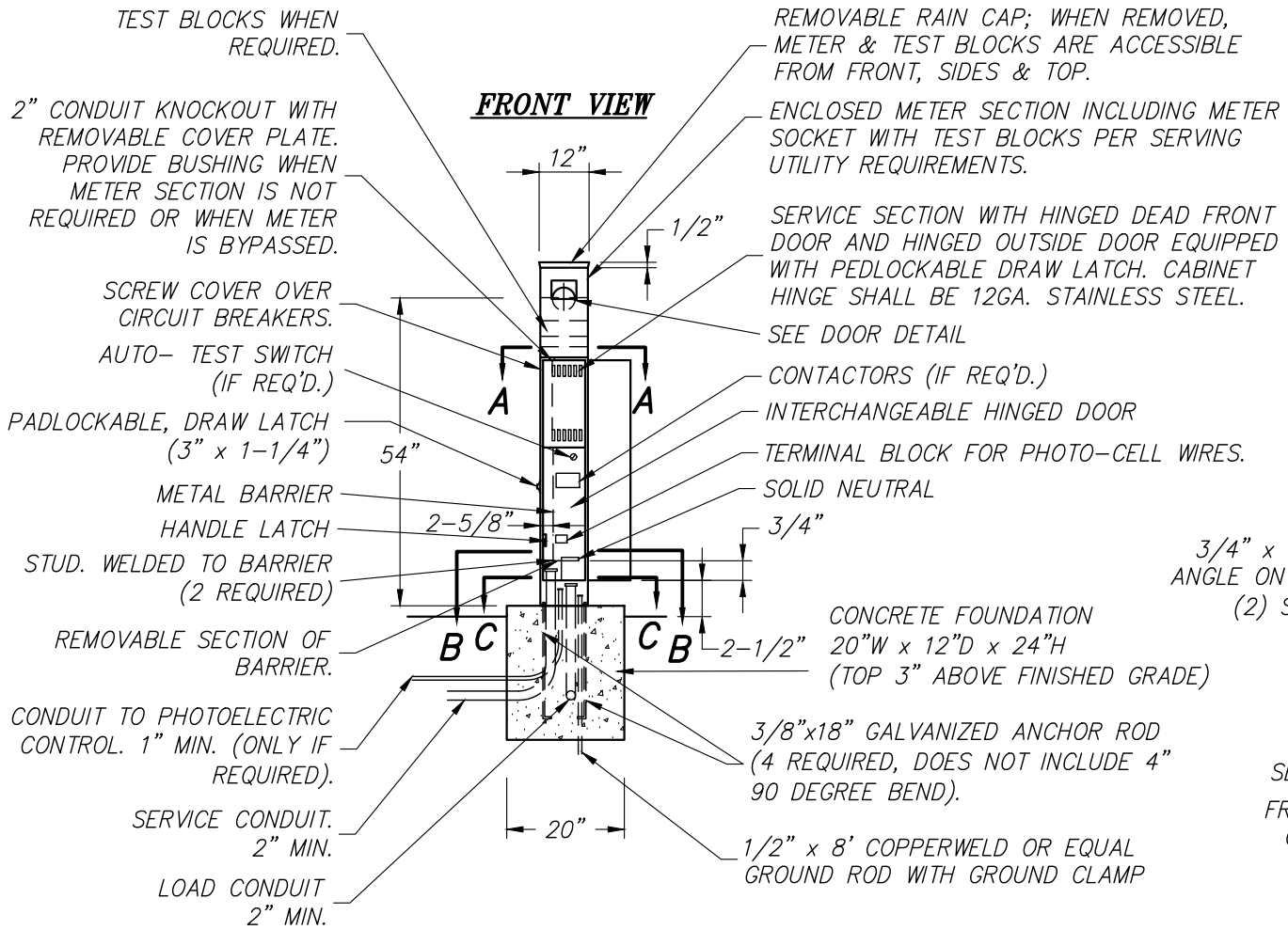

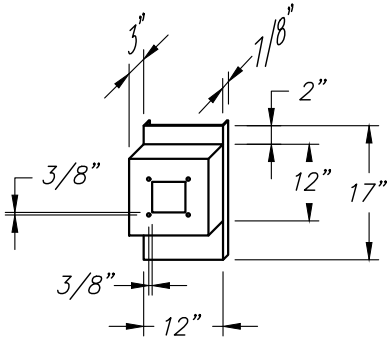

DOOR DETAIL

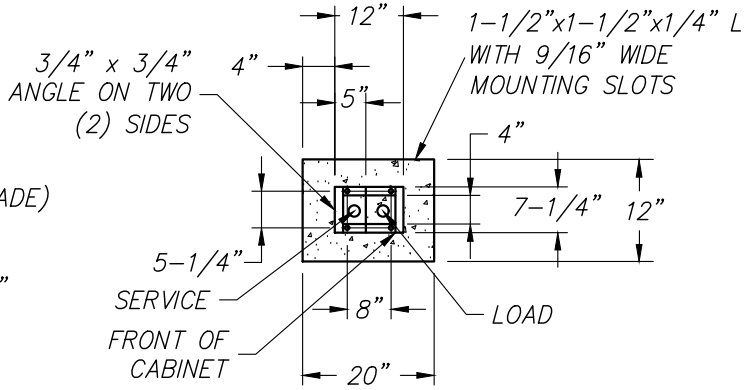

SECTION C-C

NOTE: GENERAL NOTES LISTED ON SL-5.

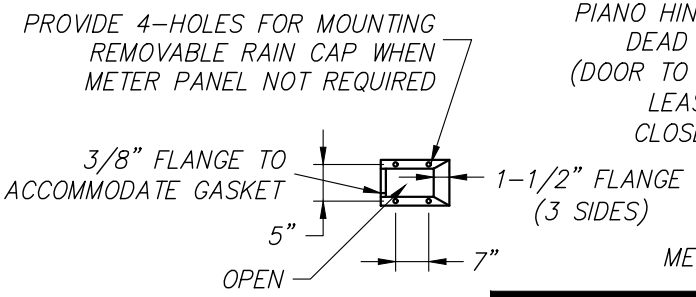

SECTION A-A

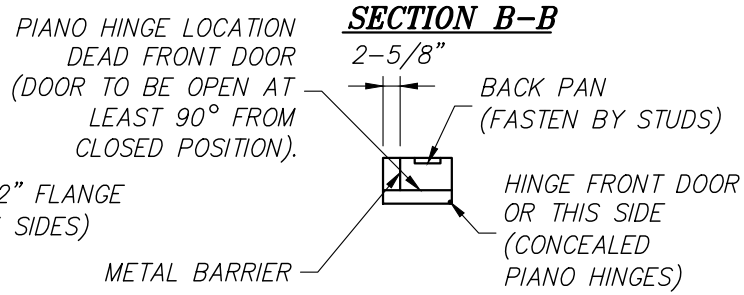

SECTION B-B

CITY OF LINCOLN
ENGINEERING DEPARTMENT

SERVICE CABINET & METER SOCKET FRONT VIEW

REVISIONS:	DATES:	APPROVED:
		CITY ENGINEER DATE

SCALE: NONE
DATE: SEPTEMBER 2019
DRAWN BY: C.G.

SL-4

SIDE VIEW

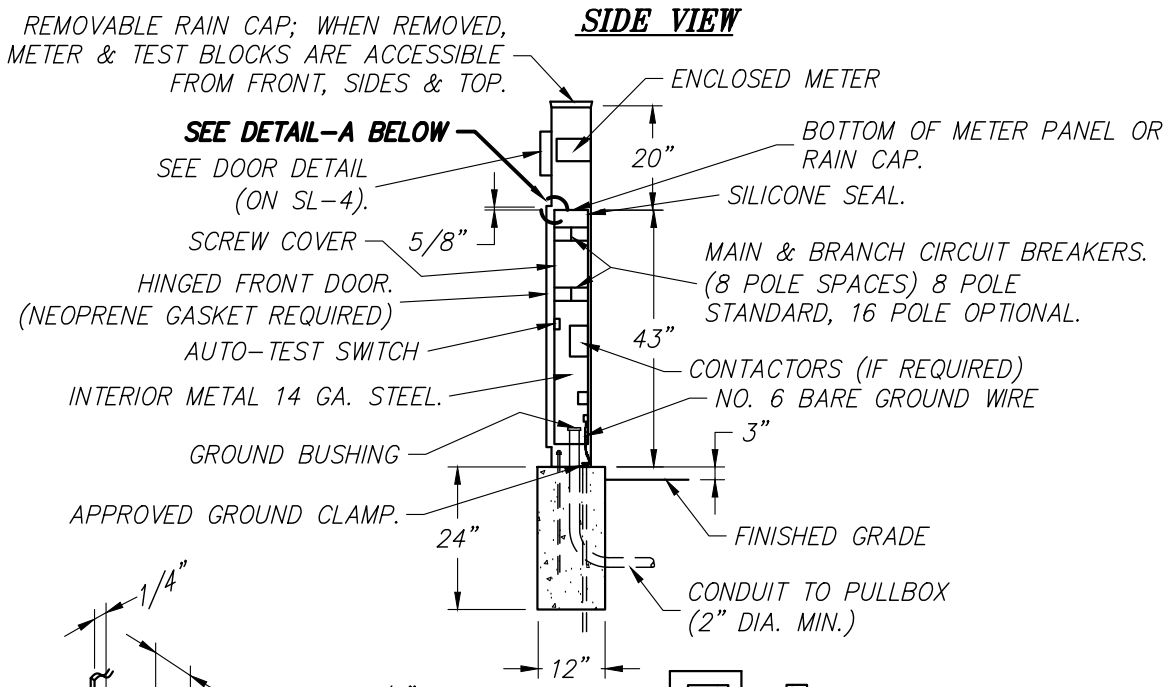

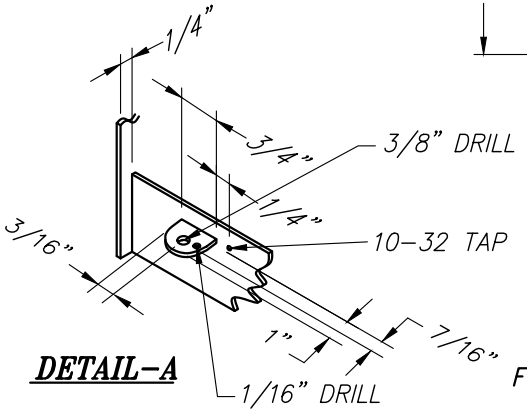

DETAIL-A

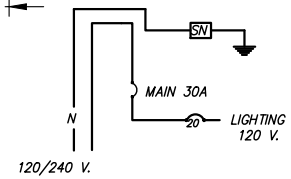

DIAGRAM - B
(UNMETERED)
FOR MAX. OF 3 STREET LIGHTS.

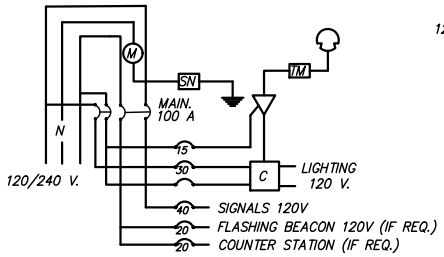

DIAGRAM - B
(METERED & UNMETERED)

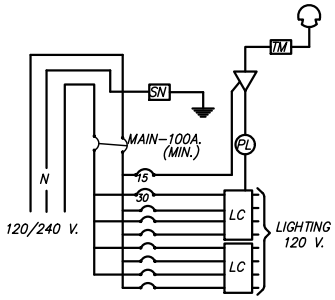

DIAGRAM - C
(STREET LIGHT)

WIRING DIAGRAM SYMBOLS

- (M) METER SECTION WITH MANUAL CIRCUIT CLOSING DEVICE
- [C] CONTACTOR (LIGHTING) - 30A
- [LC] ELECTRICALLY HELD CONTACTOR - 30 A
- PHOTOELECTRIC UNIT (BY OTHERS)
- ▽ AUTO-TEST SWITCH
- [SN] SOLID NEUTRAL BUS
- [TM] TERMINAL BLOCK FOR PHOTOCELL WIRES

GENERAL NOTES:

1. SERVICE PEDESTAL SHALL CONFORM TO THE PROVISIONS IN SECTIONS 96-2.11 "SERVICE" OF THE STATE OF CALIFORNIA.
2. SEE PLANS FOR CONDUIT AND WIRE SIZE.
3. PAINT SERVICE CAN AND METER SECTION.
4. SERVICE EQUIPMENT CABINET SHALL BE PRE-WIRED AND SHALL CONFORM TO N.E.M.A. CLASS 2 C STANDARDS.
5. ALL CONTROL WIRING SHALL BE AWG 14 PED TW 19 STRAND WIRE UNLESS OTHERWISE NOTED.
6. EACH SERVICE EQUIPMENT CABINET SHALL BE PROVIDED WITH "PHENOLIC" NAME PLATE ON THE DEAD FRONT PANEL FOR EACH BREAKER INSTALLED. ALL NAME PLATES TO BE SCREWED ON.
7. A PLASTIC COATED WIRING DIAGRAM SHALL BE PROVIDED AND ATTACHED TO THE INSIDE OF THE FRONT DOOR.
8. ALL SERVICE EQUIPMENT CABINETS SHALL BE NEMA 3-R.
9. FACTORY BUSSED (300 AMP) UNDERGROUND PULL SECTION WITH ALUMINUM BODIED LANDING LUGS WITH MULTIPLE SECONDARY LUGS FOR PRE WIRED METERED AND UNMETERED CIRCUITS.
10. ALL EQUIPMENT SUPPLIED SHALL BE A CURRENTLY MANUFACTURED ITEM.
11. DIAGRAM-B THE SERVICE EQUIPMENT CABINET SHALL BE SPLIT BUSSED TO PERMIT METERED AND UNMETERED BRANCH CIRCUITS.
12. DIAGRAM-C FOR SMALLER SERVICE WHEN SHOWN. THE UNUSED COMPONENTS WILL NOT BE REQUIRED.

CITY OF LINCOLN
ENGINEERING DEPARTMENT

SERVICE CABINET & METER SOCKET SIDE VIEW & NOTES

REVISIONS:	DATES:	APPROVED:
		CITY ENGINEER DATE

SCALE: NONE
DATE: SEPTEMBER 2019
DRAWN BY: C.G.

SL-5

TYPICAL VOLTAGE DROP CALCULATION FOR 2-WIRE SYSTEM

VOLTAGE DROP (COPPER CONDUCTOR) = $\frac{DxAxNx22}{\text{CIRCULAR MILS}}$

D = LENGTH OF SECTION, ON FEET.
A = LINE OPERATING AMPERES DRAWN BY ONE LIGHT.
N = NUMBER OF LIGHTS IN THE CIRCUIT BEYOND THE SECTION.

SIZE WIRE	AERA(CIRCULAR MILS)
14	4,110
12	6,530
10	10,380
8	16,510
6	26,250
4	41,740

LINE OPERATING AMPERES FOR HIGH PRESSURE SODIUM LUMINAIRES
100 WALTS....1.25 AMPS
150 WALTS....1.80 AMPS
250 WALTS....2.90 AMPS

EXAMPLE:

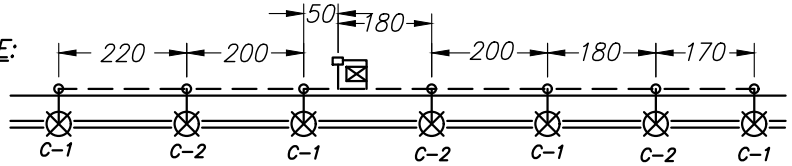

FIND TOTAL VOGTAGE DROP IN CIRCUIT #1 (115 VOLT SYSTEM)

SECTION .... $\frac{30(2.9x4)(22)}{16,510} = 0.46$

SECTION .... $\frac{360(2.9x2)(22)}{10,380} = 4.43$

SECTION .... $\frac{220(2.9x1)(22)}{10,380} = 1.35$

TOTAL VOLTAGE DROP = 6.24

LEGEND:

- 250w HIGH PRESSURE SODIUM LUMINAIRES
- C-1 CIRCUIT #1
- SERVICE CAN
- CONDUIT

NOTES:

1. DESIGN MUST BE BASED ON A TWO (2) WIRE SYSTEM, EVEN THOUGH THREE (3) WIRES (w/ A SINGLE COMMON WIRE) ARE ACTUALLY USED.
2. MAXIMUM VOLTAGE DROP ALLOWED = 8.05 VOLTS.
3. USE 56' R/W STANDARDS FOR R/W LESS THEA 56'.

WIRE SIZE FOR 2-WIRE MULTIPLE STREET LIGHTING SYSTEM

HIGH PRESS SODIUM LAMP WATTAGE	STREET CLASSIFY CATION	MC LIGHTS DIM SAME CIRCUIT	MAXIMUM DISTANCE 440	600	660	720	800	860	900	1000	1080	1100	1200	1320	1440	1500	1540	1600	1760	1800	2000	2100	2160	2400	2420	2640	2840	3000
250w	MAJOR ART. 96'	2			10																							
		3	10					6					6															
		4						6																				
150w	MAJOR IND. 84'	2	14		12																							
		3	12				10					8																
		4					8										6											
		5				8								6														
150w	MINOR ART. 74'	2			12					10				8														
		3						8											6									
		4									6																	
150w	MINOR IND. & COLLECT 96'	2			12					10							8											
		3							8														6					
		4								6																		
100w	RES. 56'	2		14						12						10												
		3						10											8				6					
		4							8															6				
		5											6															

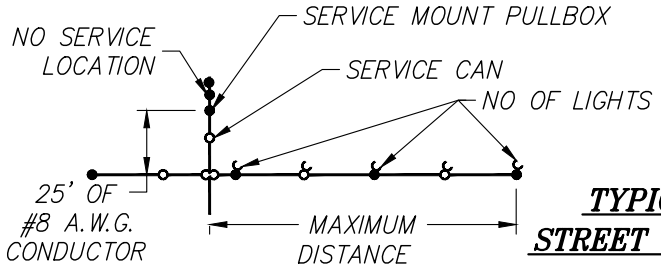

TYPICAL MULTIPLE STREET LIGHTING SYSTEM

CITY OF LINCOLN
ENGINEERING DEPARTMENT

STREET LIGHT WIRE SIZE CHART

REVISIONS:	DATES:	APPROVED:
		CITY ENGINEER DATE

SCALE: NONE
DATE: SEPTEMBER 2019
DRAWN BY: C.G.

SL-7

TYPICAL VOLTAGE DROP CALCULATION FOR 3-WIRE SYSTEM

$$\text{VOLTAGE DROP (COPPER CONDUCTOR)} = \frac{D \times A \times N \times 11}{\text{CIRCULAR MILS}}$$

D = LENGTH OF SECTION, ON FEET.
A = LINE OPERATING AMPERES DRAWN BY ONE LIGHT.
N = NUMBER OF LIGHTS IN THE CIRCUIT BEYOND THE SECTION.

SIZE WIRE	AERA(CIRCULAR MILS)
14	4,110
12	6,530
10	10,380
8	16,510
6	26,250
4	41,740

LINE OPERATING AMPERES FOR HIGH PRESSURE SODIUM LUMINAIRES
100 WALTS....1.25 AMPS
150 WALTS....1.80 AMPS
250 WALTS....2.90 AMPS

EXAMPLE:

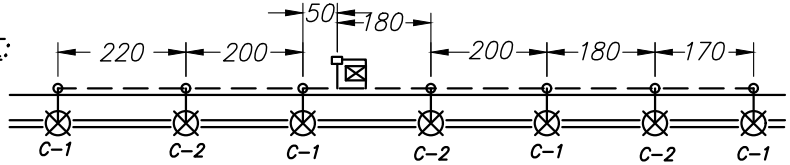

FIND TOTAL VOGTAGE DROP IN CIRCUIT #1 (115 VOLT SYSTEM)

SECTION A... $\frac{30(2.9 \times 4)(11)}{16,510} = 0.23$

SECTION B... $\frac{360(2.9 \times 2)(11)}{6,530} = 3.52$

SECTION C... $\frac{220(2.9 \times 1)(11)}{6,530} = 1.71$

TOTAL VOLTAGE DROP = 5.46

LEGEND:

- 250w HIGH PRESSURE SODIUM LUMINAIRES
- C-1 CONDUIT #1
- SERVICE CAN
- CONDUIT

NOTE: MAXIMUM VOLTAGE DROP ALLOWED 7.0 VOLTS

WIRE SIZE FOR 3-WIRE MULTIPLE STREET LIGHTING SYSTEM

H P S LAMP WATTAGE	STREET CLASSIFY CATION	LIGHTS SAME CIRCUIT x	MAXIMUM DISTANCE 660	880	1000	1100	1200	1320	1440	1540	1600	1760	1800	1920	1980	2160	2200	2400	2640	2700	2860	2880	3080	3120	3300	3520	3840	4000	4080	4400
250w	MAJOR ART. xx'	2	12																											
		3	12	10	8																									
		4	8					6																						
		5	8				6																							
150w	MAJOR IND. 84'	2	14																											
		3	12	10																										
		4	8												6															
		5	8							6																				
150w	MAJOR ART. 74'	2	14	12																										
		3	12		10				8																					
		4	10					8							6															
		5	8									6																		
150w	MINOR IND. & COLLECT xxxxx	2	14	12			10																							
		3	10						8																					
		4	8												6															
		5	6																											
100w	RES. 56'	2	14		12																									
		3	12						10																					
		4	10							8																				
		5	8															6												

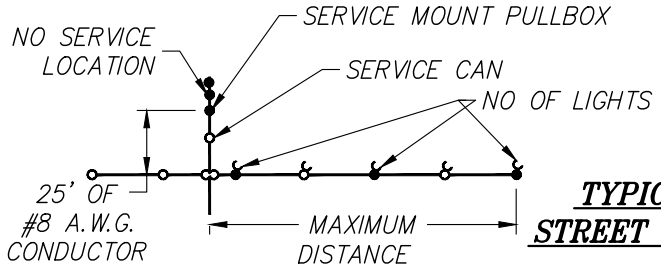

TYPICAL MULTIPLE STREET LIGHTING SYSTEM

CITY OF LINCOLN
ENGINEERING DEPARTMENT

STREET LIGHT WIRE SIZE CHART 2

REVISIONS:	DATES:	APPROVED:
		CITY ENGINEER DATE

SCALE: NONE
DATE: SEPTEMBER 2019
DRAWN BY: C.G.

SL-8

CONDUIT SIZING

CONDUIT SIZE	1"	1 1/2"	2"	2 1/2"	3"	3 1/2"
EQUIVALENT NUMBER OF #14 A.W.G. CONDUCTORS*	8	19	31	44	69	91

* 1-#12 CONDUCTOR = 1.2-#14 CONDUCTORS
1-#10 CONDUCTOR = 1.5-#14 CONDUCTORS
1-#8 CONDUCTOR = 2.3-#14 CONDUCTORS
1-#6 CONDUCTOR = 3-#14 CONDUCTORS
1-#4 CONDUCTOR = 4-#14 CONDUCTORS

CONDUIT BREAKER SIZING

CONDUCTOR SIZE A.W.S.	MAXIMUM CIRCUIT BREAKER AMPERAGE
#2	100
#4	80
#6	50
#8	40
#10	30

NOTE: THE BREAKER SIZE SHALL BE DETERMINED FROM THE SMALLEST CONDUCTOR IN THE CIRCUIT.

CITY OF LINCOLN
ENGINEERING DEPARTMENT

STREET LIGHT CONDUIT AND BREAKER SIZES

REVISIONS:	DATES:	APPROVED:
		CITY ENGINEER DATE

SCALE: NONE
DATE: SEPTEMBER 2019
DRAWN BY: C.G.

SL-9

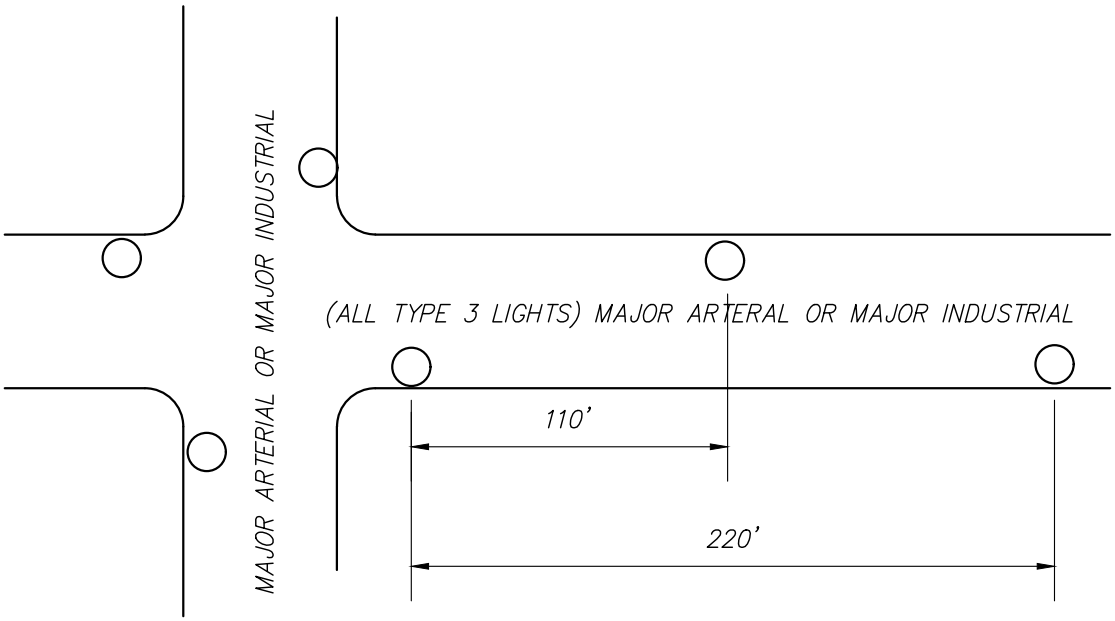

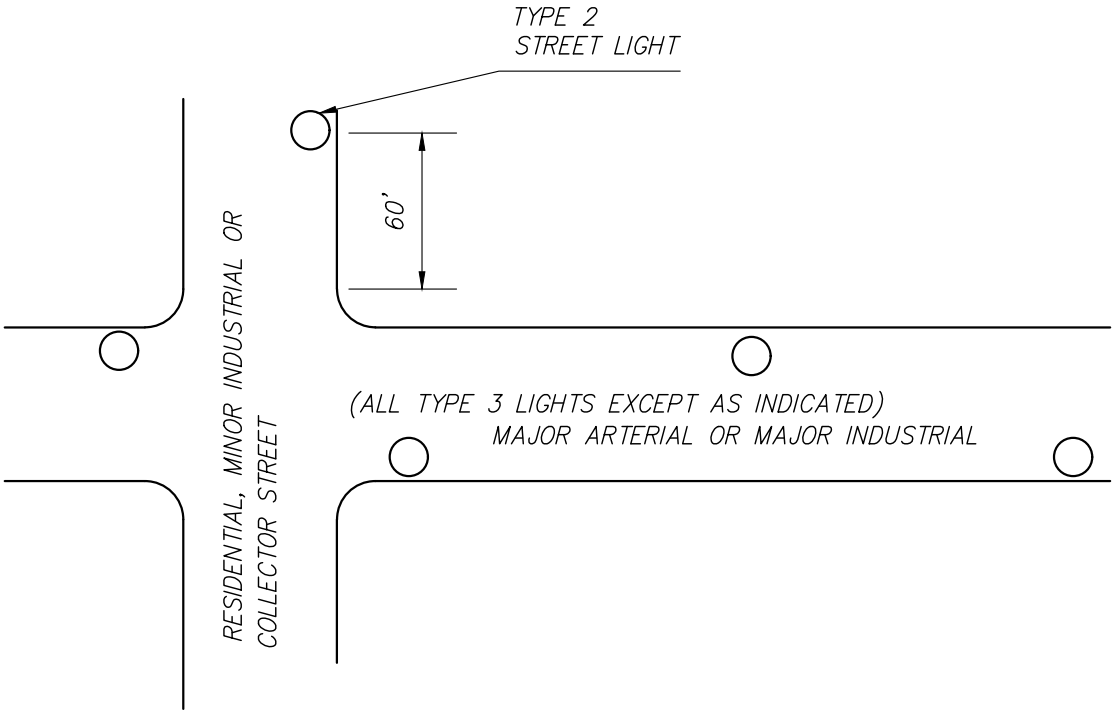

NOTES: ANY MODIFICATIONS REQUIRE APPROVAL OF CITY ENGINEER.

CITY OF LINCOLN
ENGINEERING DEPARTMENT

STREET LIGHT LOCATIONS AT MAJOR ARTERIALS & MAJOR INDUSTRIAL

REVISIONS:	DATES:	APPROVED:
		CITY ENGINEER DATE

SCALE: NONE
DATE: SEPTEMBER 2019
DRAWN BY: C.G.

SL-10