SECTION 5

SANITARY SEWER SYSTEM (SS)

5-1 General SS-1
5-2 Connection to Existing Facilities SS-2
A. System Tap SS-2
B. Existing Sewer Stubs SS-2
5-3 Construction Staking SS-3
5-4 Trench Work SS-3
A. Existing Pavement SS-3
B. Water in Trench SS-3
C. Unsuitable Trench Bottom SS-4
D. Steel Trench Plates SS-4
E. Temporary Resurfacing SS-5
F. Open Trench SS-5
G. Trench Width SS-5
5-5 Pipe Bedding SS-5
A. Pipe Support SS-5
B. Saturated Trench SS-5
C. Bell Holes SS-5
5-6 Concrete Cradles, Arches, & Encasements SS-6
A. Pipe Support SS-6
B. Concrete SS-6
5-7 Pipe Installation SS-6
A. Pipe Cleanliness SS-6
B. Placing Pipe SS-6
C. Joining Pipe SS-6
D. Covering Pipe SS-6
E. Manufacturer's Recommendations SS-6
F. Vitrified Clay Pipe (VCP) Installation SS-7
G. Polyvinyl Chloride (PVC) Installation SS-7
H. High Density Polyethylene (HDPE) Installation SS-7
I. Ductile Iron Pipe (DIP) Installation SS-7
J. Transitions between VCP and PVC or HDPE SS-7
K. Boring SS-7
1. Excavation SS-7
2. Installation of Conductor SS-7
3. Placing Pipe in Conductor SS-8
4. Backfill of Voids SS-8
5. Ground Loss SS-8
5-8 Force Main Installation SS-8
A. Force Main Standards SS-8
B. Force Main Pipe SS-9
5-9 Manhole Installation SS-9
A. Top of Manhole in Pavement SS-9
B. Top of Manhole Off-Site SS-9
C. Top of Manhole Landscape Area SS-9
D. VCP Entering Manhole SS-9
E. Lids SS-9
F. Existing SS-10
G. Bases SS-10
H. Adjusting Manholes SS-10

I. Joints SS-10
J. Ladder Steps SS-11
K. Epoxy Manhole SS-11
L. Metering Manhole SS-12
1. Packaged Manhole SS-12
M. Manhole Structure Backfill SS-12
5-10 Lateral Installation SS-13
5-11 Pipe Backfill QA/QC SS-13
A. Performance Based QA/QC (Non-Testable Materials) SS-13
B. Design Based QA/QC (Testable Materials) SS-14
C. Trench Backfill Material SS-14
D. Pipe Zone Backfill SS-15
E. Compaction Test Methods SS-15
F. Testing Frequencies SS-15
G. Warning Tape SS-16
H. Marking in Unpaved Areas SS-16
5-12 Testing of Installed Improvements SS-16
A. Sewer Mains and Services SS-16
1. Air Pressure Test SS-17
2. Closed Circuit TV Inspection SS-17
B. Manholes SS-18
5-13 Punch List Process SS-18
5-14 Repairing Installed Improvements SS-19
A. Repairing Vitrified Clay Pipe SS-19
5-15 Materials SS-19
A. Approved Equal SS-19
1. Product SS-19
2. Contact SS-19
3. Reference SS-19
B. Unapproved Materials SS-20
C. Backfill Material SS-20
D. Sewer Main and Service Laterals SS-20
E. Cleanout SS-20
F. Manholes SS-20
1. Barrels, Cones and Lids SS-20
a. 48-inch Manhole Material SS-20
b. 60-inch Manhole Material SS-20
c. 72-inch Manhole Material SS-20
2. Manhole Frame and Cover SS-21
3. Precast Manhole Base SS-21
G. Appurtenances SS-21
1. Air Release Valve SS-21
2. Clay to Concrete Sealant SS-21
3. Cleanout Caps SS-21
4. Couplings SS-21
5. Flange Gaskets SS-21
6. Joint Sealing Compound SS-21
7. Locations Stakes SS-21
8. Mortar SS-21
9. Silicone SS-21
10. Sulfide Protection SS-21
11. Wastewater Marking Tape SS-21
12. Parshall Flumes SS-21
5-16 Sanitary Sewer Details SS-22

SECTION 5

SANITARY SEWER SYSTEM (SS)

5-1 **General** – All improvements within the City of Lincoln will be approved and permitted by the City, and will conform to the City of Lincoln Design Criteria & Procedures Manual. All sewer pipe, fittings, and related appurtenances will be installed in strict accordance with the approved project improvement plans, these Public Facilities Improvement Standards, certain sections of the latest editions of the Caltrans Standard Plans and Caltrans Standard Specifications, and as recommended by the material manufacturer.

Should conflicts arise between documents, the approved project improvement plans and specifications will govern over these Public Facilities Improvement Standards. These Public Facilities Improvement Standards will govern over the Caltrans Standard Specifications. In the event of conflict between applicable documents and/or plans, the most restrictive will prevail.

The manufacturer's guideline for all materials to be used on the project will be present at the construction site at all times.

The Developers and Contractors will comply with all applicable City, County, State, and Federal laws and regulations relating to construction of the improvements as required.

If the City Engineer determines that any work on private or public property constitutes a hazard to the health, safety, or welfare of the public; endangers property; adversely affects the safety, use or stability of adjacent property; an overhead or underground utility, or a public way, watercourse or drainage channel; or could adversely affect the air quality; or the water quality of any water bodies or water courses; the City Engineer may issue a stop work notice to the owner of the property upon which the condition is located, or other person or agent in control of such property. Upon receipt of such stop work notice, the recipient will, within the period specified therein, stop all work, obtain necessary permits and conform to the requirements identified in the stop work notice. The City Engineer may require the submission of plans or other reports, detailed construction recommendations, studies, or other engineering data prior to and in connection with any corrective or proposed work or activity.

All improvements within the City of Lincoln will be performed by a contractor licensed in accordance with the California Contractors State License Law, Business and Professions Code Section 7000 et seq.

All persons, firms, partnerships, or corporations doing business of any nature in the City of Lincoln will have a current Business License as stated in Chapter 5.04-License Tax, City of Lincoln Municipal Code. This includes developers, Engineers, and contractors.

Refer to the City of Lincoln's Design Criteria & Procedures Manual for design information.

All projects will be in compliance with the State Water Quality requirements for Erosion and Sedimentation Control at all times.

5-2 **Connection to Existing Facilities** – Connection to existing City sewer facilities may be made upon approval of City Engineer.

A. System Tap – The City Engineer has the option of making any system tap required on the plans. Should the City Engineer elect to perform the tap, the Contractor will pay for such work. The City will determine the cost of work on a time and materials reimbursement basis or by the fee(s) as established in the City's fee ordinance. The Contractor will be responsible for the following tasks associated with the tap, and as determined by the City Engineer:

1. Coordinating the work requested with the Sewer Division and the City Engineer. This will include discussions on provisions for materials and equipment required to complete the work.

2. Acquire an encroachment permit from the City Engineer as required.

3. Provide traffic control as required by the City Engineer.

4. Excavate the work area, as agreed upon by the City Engineer.

5. Provide sheeting/shoring as required to provide a safe and workable area.

6. Provide lighting as required if the tap is to be performed at night.

7. Backfill and compact the excavations(s) upon tap completion.

B. Existing Sewer Stubs – The Contractor will excavate and connect to an existing sewer stub in the presence of the City Engineer or his/her designated representative.

5-3 **Construction Staking** – The sewer main will be staked prior to installation. Such staking will provide the station and offset to the sewer main, as well as the cut to the nearest tenth of a foot, 0.1-foot. Stakes will be provided at a minimum of every 50-feet in tangent sections and every 25-feet in curved sections, and every 10-feet in vertical curve sections.

5-4 **Trench Work** – Earthwork required to construct sanitary sewer facilities will be performed to the lines and grades shown on the approved project improvement plans. At all times, the trench and work area surrounding the trench will be kept in a safe manner to adequately protect the public and the workers. The person designated as the project "superintendent" will be onsite during all work activity. The specified trench width will be maintained to a height of one-foot over the top of the pipe for all trench wall geometry cross-sections including: vertical walls steeped vertical walls, V-walls, and combined vertical-V-walls.

Prior to placing both trench backfill materials and pipes on the trench bottom subgrade surface, the trench bottom will be: relatively free of loose materials, have a relatively smooth appearance, have a relatively constant grade, and be firm and relatively unyielding.

The location of cut-off walls shown on the plans may be adjusted in the field if directed by the on-site geotechnical engineer and/or the City Engineer.

Refer to Detail SS-1 and Section 5-11 of these Public Facilities Improvement Standards Section for additional information on trench materials.

A. Existing Pavement – When the trench is in an existing surfaced area, the pavement will be sawed or scored and broken ahead of the trenching operations. The pavement will be cut accurately on neat and parallel lines. Before the final asphalt concrete patch is placed, the edges of the asphalt concrete will be re-sawcut at least one-foot wider than the width of the trench ("T trench") to create a smooth parallel edge (see Standard Detail H-25). All cuts in Portland cement concrete pavements will be sawcut with approved equipment.

B. Water in the Trench – When water is encountered in the trench, the owner's/developer's geotechnical consultant will be contacted by the contractor to provide input to the City Engineer. The City requires that a dewatering work plan be prepared and submitted for review prior to implementation in areas where dewatering will be anticipated. The trench will be kept dry in a manner approved by the City Engineer until placement of the approved bedding material, laying and jointing of the pipe, and placement of the shading material has been completed and approved.

The City will consider, on a case-by-case basis, the use of conventional, in-trench, sump-dewatering methods provided that the trench is backfilled with washed, crushed rock or equivalent to at least a height of 3-feet higher than the local ground water table or perched water whichever is at a higher elevation. The crushed rock may require wrapping with a geotextile filter fabric as determined by the owner's/developer's geotechnical consultant or required by City Engineer. Installation of ground water monitoring wells can be used to determine the elevation of the water table and/or perched groundwater.

The owner's/developer's geotechnical consultant should develop a dewatering work plan for review and approval by the City Engineer or his/her designated representative prior to implementation. The City requires a dewatering system be designed and implemented in all areas where trenches will be excavated and native backfill will be placed below the local ground water table and/or perched ground water. Installation of ground water monitoring wells can be used to determine the elevation of the water table and/or perched ground water. The dewatering system may include but is not limited to: drive well point screens and vacuum extraction systems, or other dewatering methods. Use of in-trench sumps will not be allowed as the sole dewatering method.

The manner employed to dispose of water pumped from an excavation will be subject to the approval of the City Engineer and will conform to all water pollution constraints of the City and other agencies. Ground water pumped from the trench will be disposed of in a manner to not cause injury to public or private property, or to constitute a nuisance or menace to the public.

C. **Unsuitable Trench Bottom** - If in the opinion of the owner's/developer's geotechnical consultant, or the City Engineer, the bottom of the trench is soft, yielding, or otherwise unsuitable as a foundation for the pipe, the unsuitable material will be removed to the depth necessary to provide a stable and satisfactory foundation. Three-quarter-inch (3/4") crushed rock will be placed in the trench to provide a stable foundation. The rock is in addition to the required pipe bedding used in the pipe zone. All rock will be wrapped with geotextile fabric (see standard detail SS-1, Type "C" Material).

D. **Steel Trench Plates** - Steel trench plates will not be used over open trench areas without the approval of the City Engineer. All steel plates will be adequately restrained to eliminate shifting. Trench plates do not eliminate the need for shoring when required. Temporary asphaltic plant mix ("cut-back") at least one-foot in width will be used for a transition on each edge of the plate. "Steel Plate Ahead" signs (W8-24) will be installed 200-feet on each side before the steel plate. The sign will only be mounted to an operable, lighted barricade for a maximum of 24-hours. The sign will be mounted to a 4-inch x 4-inch post if the placement of steel trench plates will exceed 24-hours.

E. Temporary Surfacing - In roadway areas, a temporary asphalt plant mix "cut-back" surface not less than 2-inches in thickness may be placed immediately after the top backfill has been completed and compacted. This temporary surface will be maintained at a level surface until removal. The temporary surfacing material will be removed just prior to placing the permanent surface material.

F. Open Trench - The trench will be in a safe condition at all times.

1. In roadway areas and locations accessible to the public, trenches will be excavated only as far in advance of pipe laying as can be backfilled in the same day. In addition, the maximum total length of open trench will be no more than 50-feet ahead of the pipe laying operation, or 50-feet behind the pipe laying operation. A trench in an existing roadway that is not to be regraded is defined as "open" until backfilled to existing grade.

2. In new developments and areas not accessible to the public, trenches will be excavated only as far in advance of pipe laying as can be backfilled in the same day. In addition, the maximum total length of open trench will be no more than 300-feet ahead of the pipe laying operation, or 200-feet behind the pipe laying operation. A trench in an existing roadway that is not to be regraded is defined as "open" until backfilled to existing grade.

G. Trench Width - The trench bottom width will be 12-inches to 24-inches greater than the diameter of the pipe and will extend to 24-inches above top of pipe and will comply with Improvement Standard Detail SS-1 or as approved by the City Engineer.

5-5 PIPE BEDDING - Conform to Standard Detail SS-1 and the following:

A. Pipe Support - Bedding will provide uniform and continuous support along the barrel of the pipe. The minimum depth of bedding material will be provided under the bell. Blocking of the pipe is not permitted. Loose material will be removed from the trench bottom and replaced with imported material.

B. Saturated Trench - Where a saturated trench condition is encountered, the trench wall and pipe will be lined with a geotextile fabric as shown on Standard Detail SS-1, and to the satisfaction of the City Engineer.

C. Bell Holes - Bell holes will be excavated per the manufacturer's recommendations. The minimum depth of bedding material will be provided under the bell. Care will be taken to ensure that the bell hole is no larger than necessary to accomplish proper joint assembly.

5-6 **CONCRETE CRADLES, ARCHES & ENCASEMENTS** - Concrete cradles, arches and encasements will only be allowed at the discretion of the City Engineer and will conform to the Standard Details and these improvement standards:

A. Pipe Support - The pipe will be placed in proper position on temporary supports consisting of concrete block or bricks. When necessary, the pipe will be rigidly anchored or weighted to prevent flotation when the concrete is placed.

B. Concrete - Concrete for cradles, arches or encasements will be placed uniformly along the pipe. Concrete placed beneath the pipe will be sufficiently workable to fill the voids without excessive vibration. The concrete will be allowed to cure and remain undisturbed for 24-hours prior to backfill and compaction of the trench. Water will not be permitted to enter, seep, or run onto the concrete while curing.

5-7 **PIPE INSTALLATION** - The sewer system outfall(s) will be plugged and remain plugged until final acceptance. Sewer pipe will be installed in accordance with the following provisions:

A. Pipe Cleanliness - The Contractor will keep the pipe interior free from foreign materials and in a clean and sanitary condition until acceptance by the City. At times when pipe laying is not in progress, the open pipe end will be sealed with a tight cap or plug to prevent foreign matter from entering the pipe. Provisions will apply to the lunch-hour as well as overnight.

B. Placing Pipe - Pipe will be lowered into the trench and carefully placed on the bedding material with the use of lifting equipment and nylon straps. Chains are not permitted. The pipe will be laid carefully to the lines and grades shown without grade breaks, unless designed with such. At the discretion of the City Engineer or his/her representative, any pipe damaged during placement will be removed. If field conditions exist such that the pipe may not be laid to the specified grade, the approved plans will require revisions, approved by the City Engineer, prior to proceeding with construction.

C. Joining Pipe - Pipe sections will be closely jointed to form a smooth flowline. Care will be taken in placing the pipe and making field joints.

D. Covering Pipe - Improvements installed without proper inspection will be exposed and inspected as required by the City Engineer.

E. Manufacturer's Recommendations – All installations will follow manufacturer's recommendations unless otherwise noted on the approved plans. The manufacturer's installation guide will be on the job site at all times.

F. **Vitrified Clay Pipe (VCP) Installation** - Pipe laying will proceed upgrade with the bell end of the pipe placed upstream, and will follow manufacturer's guidelines and the National Clay Pipe Institute (NCPI) Vitrified Clay Pipe Engineering Manual, ASTM C12 and the NCPI Installation and Inspection Handbook for installation.

G. **Polyvinylchloride Pipe (PVC) Installation** – Pipe laying will proceed upgrade with the bell end of the pipe placed upstream and will follow manufacturer's guidelines and ASTM standards. See Section 5-8 for details on force main installation.

H. **Ductile Iron Pipe (DIP) Installation** – DIP may be used as an upgraded pipe material when Division of Drinking Water separation requirements cannot be met. DIP for sewer applications shall be coated on the inside with "Protecto 401" ceramic epoxy, (or approved equal) unless otherwise specified on the approved plans. DIP shall be encased in polyethylene as specified in the standard for "Polyethylene Encasement for Ductile Iron Piping for Water and Other Liquids" (ANSI/AWWA C-105/A21.5). DIP sewer systems shall be constructed per the manufacturer's recommendations.

I. **High Density Polyethylene (HDPE) Installation** – Pipe laying and butt fused joint welding will follow manufacturer's guidelines and ASTM standards. See Section 5-8 for details on force main installation.

J. **Transitions between VCP and DIP, PVC or HDPE** - When specified on the approved Improvement Plans transitions between VCP and DIP, PVC or HDPE shall be made using a manhole.

K. **Boring -** The equipment, method and sequence of operation and conductor pipe grades shall be approved by City Engineer. A minimum of 72-hours' notice shall be given prior to the start of work.

1. **Excavation -** Excavation for the boring operation shall be the minimum necessary to satisfactorily complete the work. Bracing and shoring shall be adequate to protect workers and any adjacent structure or roadbed.

2. **Installation of Conductor** - The conductor shall closely follow the boring operation. The bored hole shall not be more than 0.10-foot larger in diameter than the outside diameter of the conductor. Guide rails shall be accurately set to line and grade to ensure installation of the conductor within allowable limits. The conductor diameter shall be sufficient to allow adjustment of line and grade of the conducted pipe to meet allowable tolerances and to allow sand to be placed between the conductor and the conducted pipe.

The inside diameter of the conductor shall be a minimum of 10- inches larger than the outside diameter of the conducted bell pipe or joint, as approved by City Engineer. A minimum of 4- inches of clearance shall be required between the conducted pipe and the casing, taking the skids into consideration.

3. **Placing Pipe in Conductor** - Conductor pipe shall be supported by a minimum of three sets of synthetic skids per stick of pipe, or as required by City Engineer. Pipe sections will be joined outside of the conductor. The skids and casing entrance will be lubricated prior to sliding the conducted pipe into place. The height of the skids may be adjusted to meet specified grades.

4. **Backfill of Voids** - The annular space between the conducted pipe and conductor will be completely filled with clean, dry, silica sand, blown into place. The method of placing sand in the void will be approved by City Engineer. Both ends of the casing will be plugged with non-shrink grout a minimum of 12-inches into the casing.

5. **Ground Loss** - Whenever, in the opinion of the City Engineer or owner's/developer's geotechnical consultant, the nature of the soil indicates the likelihood of ground loss which would result in a greater space between the outer surface of the conductor than allowed, the Contractor will take immediate steps to prevent such occurrences by installing a jacking head extending at least 18-inches from the leading edge of the conductor.

   The jacking head will cover the upper two-thirds of the conductor and project not more than ½-inch beyond the conductor outer surface. Excavation will not be made in advance of the jacking head. Voids greater than allowable will be filled with sand, soil cement, grout, or as approved by City Engineer. Where voids are suspected, the owner's/developer's geotechnical or engineering consultant may direct the Contractor to drill the conductor, to pressure inject grout to refusal and repair the drilled hole. Grouting pressure will not exceed 50-psi at the nozzle.

5-8 **FORCE MAIN INSTALLATION** – Force mains will be installed in accordance with these improvement standards:

A. Force Main Standards - The force main will be constructed and tested in accordance with AWWA standards and the water pressure pipe standards established in Section 4, Domestic Water Supply System, of these Improvement Standards, with these deviations:

1. The force main will not require disinfecting or water quality testing. The main shall be pre-flushed and flushed again with a properly sized "pig" after the pressure test. Flushing shall occur in the presence of the City Engineer.

2. Backfill tape shall be 12-inch wide green plastic stating "Buried Sewer Force Main".

B. Force Main Pipe – The force main will be constructed of the following materials:

1. Force Mains less than 6” will be constructed of PVC Schedule 80.

2. Force mains 6” or larger will be constructed of High Density Polyethylene (HDPE) with butt-fused joints and wall thickness of not less than DR11.

Any alternate force main pipe not listed in this section must be approved by the City Engineer prior to installation.

5-9 MANHOLE INSTALLATION - Manholes will be installed in accordance with the Improvement Standard Details and these improvement standards:

A. Top of Manhole in Pavement - Frames and covers will be set flush with finish grade, unless otherwise noted on the approved plans. Per the Standard Details, a 12-inch deep by 12-inch wide concrete collar with a #4 rebar ring will be placed around the casting, covered by 2-inches of asphalt concrete paving.

B. Top of Manhole Off-Site - Manholes placed in off-site, unimproved areas will be constructed with the top of the casting cover a minimum of 12-inches above the final surrounding grade. A minimum 12-inch wide Class "A” concrete collar with a #4 rebar ring will be constructed around the casting and 6-inches below finish grade.

C. Top of Manhole Landscape Area - Manholes placed in landscape areas adjacent to City improvements will be constructed with the top of the casting cover a minimum of 6-inches above the final surrounding grade. A minimum 12-inch wide Class “A” concrete collar with a #4 rebar ring will be constructed around the casting and 6-inches below finish grade.

D. VCP Entering Manhole - VCP pipe entering a sewer manhole will have a flex joint at the manhole base. A flex joint consists of a bell and spigot joint at the manhole and a bell and spigot joint located 12-inches to 24-inches outside of the manhole.

E. Lids - Manhole lids and castings will be 24-inch diameter with or without bolt-down capability with two cast-in-place bars and a gas detector probe hole. Lids will have no pick holes. Lids will be bolted when a manhole is constructed outside a paved area or as specified on the approved plans.

F. **Existing** - Sewer mains or lateral services entering an existing manhole will be core drilled, without exception. Any work on an existing sewer manhole will require the manhole to pass a vacuum test as described in section 5-12 of these Improvement Standards. The work completed will remain exposed until the vacuum test has been accepted by the City Engineer.

G. **Bases** - Concrete manhole bases will be pre-cast unless approved by the City Engineer. Pre-cast bases will conform to the Materials section of these Improvement Standards. Unused channels will be grouted with mortar to form a smooth bottom. Cast-in-place manholes will be constructed in accordance with the details provided in these Improvement Standards:

1. Concrete will be vibrated to reduce porosity for vacuum testing. Concrete will be Class A, 6-sack mix.

2. Belled pipes set in the manhole base wall will be set flush with the exterior of the wall. The "speed-seal" on the spigot end will be cut off prior to setting.

3. Unless specified on the approved plans, there will be a 0.10-foot drop constructed across the manhole base.

4. The top of the base will be formed to accept the first barrel section. Wet setting is not permitted. RAM-NEK® will be installed on this first joint after the Director of Public Works/City Engineer has approved the manhole base for stacking.

5. The concrete will cure a minimum of 24-hours before stacking the barrel sections.

6. The bedding will consist of a minimum of 4-inches of compacted crushed rock placed on a geotextile isolation layer.

7. Flow through manholes will have the pipe laid continuously as a whole pipe with flex joints and a minimum 0.1-foot drop, or as approved. After the initial 24-hour curing period, the top half of the pipe will be carefully cut off without cracking the bottom. The sides will be mortared smooth.

H. **Adjusting Manholes** - The manhole neck and frame will be adjusted to grade. Use of metal grade rings is not permitted. The finished manhole will conform to Standard Detail SS-4, or as approved by the City Engineer.

I. **Joints** - All joints between the frame, grade rings, dome, barrels and base will be sealed with non-shrink mortar, or an approved plastic sealing material. Inside the manhole, all joints where the sealing material is not flush with the inside wall will be grouted with non-shrink mortar and finished/wet-brushed.

J. Ladder Steps - Manhole steps shall be installed per CalOSHA Title 8. Steps shall not exceed 14-inches or less than 10-inches between the step surfaces of the rungs and shall be uniform through the length of the ladder.

K. Epoxy Manholes – Sewer manholes in force mains, lift stations or as required by the City Engineer, requiring epoxy coating will first pass a vacuum test and will then be constructed as follows:

1. The exterior of the manhole will be coated with an asphaltic material and wrapped in 8-mil polyethylene prior to backfilling.

2. All voids and imperfections in the interior of the manhole will be mortared or "sacked" smooth with a cement paste composed of 50% Portland cement and 50% sand. The mortar mixture will be manually worked into the dampened surface with sufficient pressure to completely fill voids and imperfections. The surface will then be finished smooth. This process will be continued until the entire manhole surface (base, barrel, cone, neck and joints) is smooth and free of imperfections.

Upon receiving City Engineer approval of the sacking, the outlet channel(s) of the manhole to be epoxied and the first upstream manhole will be mechanically plugged to prevent water flow. The newly sacked manhole will cure for a period of 28-days.

3. The epoxy coating may be applied after the 28-day curing period has ended. An accepted method of epoxy application is as follows:

a. Mask off the metal frame.

b. Sandblast the interior concrete surfaces of the sewer manhole.

c. Apply a sealer/primer and allow to cure per the manufacturer's recommendations. Application may be withheld if, in the opinion of the City Engineer, the walls of the manhole exceed the recommended moisture content.

d. Apply an approved epoxy to obtain a minimum thickness of 80 mils and allow to cure per the manufacturer's recommendations.

e. Submit a report to verify the thickness and adherence of the coating by coring samples, to the satisfaction of the City Engineer.

f. Repair the sampled areas and allow the repairs to cure.

g. Use the Holiday Detection Test ("Spark test") on the entire epoxy surface area. The electrode will provide a minimum of 10,000 volts. Areas failing the spark test will be removed, repaired and retested.

h. After approval from the City Engineer, remove the masking from the metal frame and use "Sikaflex®" (or approved equal) sealant to caulk the transition joint between the epoxy coating and the metal frame.

i. Use "Sikaflex®" (or approved equal) sealant at the concrete VCP Interface.

j. Remove the plugs.

L. Metering Manhole – Metering manholes will be a Plasti Fab Fiberglass Packaged Metering Manhole with a Parshall flume. Parshall flume size will be approved by the City Engineer prior to installation.

1. Packaged Unit – Packaged metering manhole will be a completely integral unit consisting of: a corrosion resistant fiberglass reinforced plastic manhole with sealed fiberglass bottom, concentric manway opening, fiberglass access ladder, metering flume and accessories as required.

Packaged metering manhole concentric manway opening shall be designed to withstand a 16,000 lb. vertical dynamic wheel load (H-20), plus lateral forces from earth loading, ground water and frozen soil. The manhole opening shall be a 5' barrel with 36" opening; manway for use with a cast iron cover, suitable for H-20 highway loading.

The Packaged Metering manhole will be installed in accordance with the engineer's specifications and local codes and in a manner consistent with the installation instructions and recommendations of the manufacturer.

M. Manhole Structure Backfill – These notes and Detail SS-1A apply unless noted otherwise on the approved project improvement plans:

1. Only Caltrans Class 2 Aggregate (AB) Rock will be used as backfill to a minimum horizontal distance of 5-feet around all manhole structures constructed within the City right-of-way. The Caltrans Class 2 AB Rock will extend vertically upwards from the pipe zone to the overlying asphalt concrete (AC) pavement layer. Manholes installed at a depth greater than 5-feet will be backfilled with Type "E" Material to a depth of 5-feet below finished grade and to a horizontal distance of 5 feet around the manhole. Backfill between the Type E Material and roadway structural section will be Caltrans Class 2 Aggregate Base as described above.

2. The manhole structure backfill will be moisture conditioned to within 3 percentage points of the ASTM D1557 optimum moisture content, placed in maximum 12-inch-thick loose vertical lifts (layers), and then compacted with a walk behind jumping jack type compactor.

3. The manhole structure trench backfill will be tested in place to determine its moisture, density and percent relative compaction using the following American Society for Testing and Materials (ASTM) field and laboratory test methods: D1557 Modified Proctor compaction curve, D2922 density (nuclear method), D3017 moisture (nuclear method).

4. The manhole structure backfill will be compacted to a minimum relative compaction of 95 percent in the underlying bedding zone, and in the surrounding 5-foot horizontal zone extending from the bedding zone top to the bottom of the overlying AC pavement layer.

5-10 **LATERAL INSTALLATION –** Sewer service laterals will be installed in accordance with Standard Details SS-6, SS-10, SS-11, and SS-12. Sewer laterals originating from sewer mains 14-feet in depth or greater will have the crotch on the VCP "wye" fitting filled with Class "A" or "B" concrete or as recommended by the National Clay Pipe Institute.

5-11 **PIPE BACKFILL QA/QC –** Pipe backfill will conform to Standard Details SS-1 and these Improvement standards. Construction quality assurance and quality control (QA/QC) of all utility trench backfill will be performed by the owner's/developer's geotechnical engineering consultant. A performance-based QA/QC specification will be developed and used for placement and compaction of all non-testable trench backfill materials. A design-based QA/QC specification will be used for placement and compaction of all testable trench backfill material.

A. **Performance Based QA/QC (Non-Testable Materials) –** Non-testable trench backfill materials generally consist of locally derived mixtures of cobbles with a sandy matrix and/or breccia (volcanic rock) with a sandy matrix. The non-testable backfill materials should have a maximum particle size of 6-inches (greatest dimension). Use of non-testable trench backfill materials will be approved by the City on a case-by-case basis.

A performance-based specification criteria will be used to evaluate the suitability of placed and compacted non-testable trench backfill materials. The property owner's/developer's geotechnical engineering consultant must prepare a work plan that describes a proposed site-specific performance-based specification for review and approval by the City prior to commencement of work. The work plan must include, but is not be limited to:

1. Maximum loose lift (layer thickness) prior to compaction.

2. Moisture content range to be achieved prior to compaction.

3. Minimum number of passes and coverage of specified compaction equipment.

4. Specified compaction equipment to be used.

B. **Design Based QA/QC (Testable Materials) –** Testable trench backfill materials generally consist of on-site native earth materials and imported earth materials that can be classified as soils according to the American Society for Testing and Materials (ASTM) Unified Soil Classifications System guideline procedures (ASTM D2487 and D2488). These soils materials can be easily tested to determine if they meet the project design based on QA/QC specifications for percent relative compaction by the following ASTM test methods:

ASTM D1556, Standard test method for in place density and unit weight of soil and soil-rock mixtures by the Sand-Cone Method.

ASTM D2922, Standard test method for in place density and unit weight of soil and soil-rock mixtures by the Shallow Depth Nuclear Method.

ASTM D3017, Standard test method for in place water content of soil and soil-rock mixtures by the Shallow Depth Nuclear Method.

C. **Trench Backfill Material –** The City requires designed based construction QA/QC testing and observation services to be performed by the owner's/developer's geotechnical engineering consultant to document that trench backfills meet or exceed the minimum material properties and minimum relative percent compaction requirements of the City specifications. The general trench backfill material types, and relative percent compaction are presented below.

1. **Type "B" Material:** Class 2 Aggregate Base Rock per Caltrans Standard Specifications.

2. **Type "C" Material:** Material will consist of gravel or crushed rock. Material will be screened and non-washed with a minimum sand equivalent of 30 per CTM217. All material will be free of wood, roots, or other deleterious material. Material to be ½" minus for 12-inch pipe or smaller and ¾" for pipe greater than 12-inches in diameter. Groundwater conditions will require ¾" uniform crushed rock regardless of pipe diameter. Drain rock will be wrapped in a layer of geotextile fabric.

3. **Type "D" Material:** Crushed rock or soil-rock mixture (native) not to exceed 3 inches. Up to a 6 inch minus material may be used with special considerations and conditions approved by the City and Geotechnical

Engineer. The material will be completely free of wood, roots, or other deleterious materials. Material not to be used within 24-inches of top of pipe without City Engineer's approval. Compaction will be by vibratory equipment or other approved devices. The City may require that the material be screened. A layer of geotextile fabric will be placed between the pipes and intermediate backfill zone. Material will only be used with geotechnical engineer's recommendation and with approval of the City Engineer.

4. **Type "E" Material:** A low strength, concrete slurry type backfill material made with a mixture of cement, fly-ash, and aggregate. To be used for intermediate zone backfill at depths greater than 5-feet below finished grade. For reference, refer to Section 3-9 "Materials".

D. **Pipe Zone Backfill –** For pipe 12-inches in diameter and smaller, no more than one-half of the pipe will be covered prior to shovel slicing (forcing rock backfill into the lower quadrants of the pipe) For pipe greater than 12-inches in diameter, no more than 6-inches will be covered prior to shovel slicing. At the discretion of the City Engineer or his/her representative, any pipe damaged during backfill will be removed.

Shovel slicing will be witnessed by the City Engineer prior to shading the pipe. Proposed bedding, hunching and initial backfill (pipe backfill) materials will be approved by soils engineer and submitted to the City Engineer with sieve analysis and sand equivalent test results. California Test Methods will include 216, 217, 301, and 302. Compaction equipment will not make direct contact with the pipe.

E. **Compaction Test Methods –** The percent relative compaction of all testable trench backfill soil are determined by a combination of the following ASTM test methods:

ASTM D1557, Modified Proctor Compaction Curve.

ASTM D1556, In-place Soil Density by The Sand Cone Replacement Method.

ASTM D2216, Soil Moisture Content by the Convection Oven Method.

ASTM D2922, In-place Soil Density by Nuclear Method.

ASTM D3017, In-place Soil Moisture Content by Nuclear Method.

ASTM D4643, Soil Moisture Content by the Microwave Oven Method

ASTM D4959, Soil Moisture Content by the Direct Heating Method.

F. **Testing Frequencies –** All field testable trench backfill materials, that are classified according to the Unified Soils Classification System using ASTM D2487 and D2488 procedures as CL, ML, SC, SM, GC, GM, GP and GW by ASTM tests

D422 (Particle Size Gradation) and D4318 (Atterberg Plasticity Indices), will be tested for percent relative compaction using a minimum frequency of one compaction test per maximum 12-inch-thick loose lift (layer) per 250-linear-feet of trench length or material change, whichever condition requires the greatest number of tests. Generally, minimum requirements include 12-inch loose lifts; moisture conditioned to at or above optimum moisture and compacted with 8 to 10 passes/lifts by a sheepsfoot wheel mounted on a Cat 225 or equivalent. At the discretion of the City Engineer, City may require alternative compaction equipment combined with thinner lifts.

All field testable trench backfill materials, that are classified according to the Unified Soils Classification System using ASTM D2487 and D2488 procedures as CL, CH, ML and MH by ASTM tests D422 (Particle Size Gradation) and D4318 (Atterberg Plasticity Indices), should be tested for percent relative compaction using a minimum frequency of one compaction test per maximum 12-inch-thick loose lift (layer) per 100-linear-feet of trench length or material change, which ever condition requires the greatest number of tests.

G. **Warning Tape –** A 12-inch wide metallic backfill tape with the warning "Buried Sewer Main" will be placed in the trench lines of all mains and services, 24- inches above the top of pipe within road areas and 18-inches above the top of pipe within non-road areas.

H. **Markings in Unpaved Areas –** Mains in unpaved areas will be marked every 125 lineal feet with a green composite utility marker with a decal stating "Caution Buried Sewer Pipeline". Mains in landscaped areas will be delineated with a brass marker set in an 8-inch diameter concrete cylinder. The brass marker will state "City of Lincoln Sewer Main".

5-12 **TESTING OF INSTALLED IMPROVEMENTS** - Sewer mains, laterals, and manholes will be tested by these procedures:

A. **Sewer mains and services –** Sewer mains and services will be air pressure tested and Closed-Circuit Television (CCTV) inspected by the City Engineer after installation of the joint trench utility crossings and subgrade elevations have been met. 72-hour written notification is required to the City Engineer, without exception. The City shall require sewer mains and services to be re-tested prior to the completion of the one-year warranty. The Contractor is responsible for the costs associated with this re-testing.

1. **Air Pressure Test –** Sewer mains and lower laterals to be pressure tested according to these standards, NCPI Low-Pressure Air Test Booklet (Ver. 2016), and ASTM C828, Table 1:

   a. Add air to the lines until the pressure is stabilized at 3.5-psi, using a liquid filled test gauge capable of testing up to 15-psi and graduated to 1/10-psi.

   b. For mains installed in an area where the water table is higher than the pipe, the test pressure will be increased 0.5-psi per foot of water over the pipe.

   c. Determine the test time from Table 1 (minimum time 60 seconds)

TABLE 1 – Minimum Test Time for Various Pipe Sizes (Pressure drop from 3½-psi to 2½-psi)

Size	Time per 100-feet	Size	Time per 100-feet	Size	Time per 100-feet
4-inch	0.3-min	10-inch	1.5-min	18-inch	2.4-min
6-inch	0.7-min	12-inch	1.8-min	21-inch	3.0-min
8-inch	1.2-min	15-inch	2.1-min	24-inch	3.6-min

2. **Closed Circuit Television Inspections** – CCTV inspections will be performed by the Contractor. Costs for said inspection will be borne by the Contractor. Preliminary inspections may be performed by outside contractors, but will not be accepted by the City Engineer as an official record. The City Engineer, will be notified in writing 72-hours in advance of testing, without exception and will be present during television inspection. Without prior notification, the City reserves the right to reject all final T.V inspections.

   The sewer system will be completely cleaned by an approved method prior to TV inspection. The sewer system will be rejected if any of these conditions exist:

   a. Standing water or sags greater than ½ - inch in depth.

   b. Standing water in services.

   c. Offset joints.

   d. Cracked pipe.

   e. Infiltration.

   f. Protruding laterals.

Refer to the NASSCO Pipeline Assessment Standards for performance standards, including general information and definitions, quality standards, record keeping requirements, digital data formatting, appropriate screen text information and narrations and special CCTV procedures.

B. Manhole – Sewer manholes will pass a vacuum test consisting of the following criteria and procedures. The City Engineer will be notified 72-hours in advance to be present during testing, without exception.

1. The test will be performed after assembly of the manhole, but prior to backfilling. The Contractor will perform the test and supply all test equipment. The City Engineer will witness the test results.

2. Lift holes will be filled with non-shrink grout and allowed to cure prior to testing.

3. All pipes entering and exiting the manhole will be plugged. Securely brace the plugs to prevent them from being drawn into the manhole. Unused channels will be permanently plugged with a plastic or clay stopper and be filled and grouted.

4. A vacuum of 10-inches of mercury will be drawn to start the test. The amount of time required for the vacuum to drop to 9-inches will be measured. The manhole will pass the test if the amount of elapsed time is greater than 60-seconds for a 48-inch manhole, 75-seconds for a 60-inch manhole, 90-seconds for a 72-inch manhole and 120-seconds for an 84-inch manhole. A liquid vacuum gauge will be used for testing.

5. If the manhole fails the initial test, necessary repairs will be made with a non-shrink grout while the vacuum is still being drawn. Retesting will proceed until the elapsed times are satisfactory.

6. After passing the vacuum test, all joints will then be mortared, inside and out. Outside mortared joints will be allowed to dry before backfilling.

7. In cases where groundwater is anticipated to be encountered either presently or in the future, the City Engineer may require a leak test to be performed per the “Green Book”.

5-13 **PUNCH LIST PROCESS** - After the sewer manholes have been raised to finished grade, the sewer system will be flushed in the presence of the City Engineer. When the Contractor feels all improvements are substantially complete, a punch list inspection of final outstanding items can be requested by the contractor. The City Engineer or his/her delegated representative will be notified 48-hours in advance to be present during punch list inspection.

5-14 REPAIRING INSTALLED IMPROVEMENTS – Sewer mains, services, manholes and appurtenances will be repaired per the Improvement Standards:

A. Repairing Vitrified Clay Pipe (VCP)

1. Damaged pipe will be exposed and replaced in-kind by "bridging" the new pipe into place. Coupling devices will not be used.

2. Sagging or misaligned pipe will be exposed and corrected in place if possible. If the pipe is defective, then a new pipe will be bridged in place.

3. After the correction has been completed, the excavation will be backfilled and compacted to grade as specified. The repairs will then be retested per the requirements of these Improvement Standards.

5-15 MATERIALS

All steel and iron materials furnished for incorporation into sanitary sewer work will be manufactured in the United States. A Certification of Compliance, conforming to the provisions in Section 6-2.05, "Buy America", of the Caltrans Specifications will be furnished for steel materials. The certificates, in addition to certifying that the materials comply with the Specifications, will also specifically certify that all manufacturing processes for the materials occurred in the United States.

A. Approved Equal – The words "approved equal" will mean any material deemed by the City Engineer to be acceptable for use within the City's sewer system as compared to products of specified manufacturers. Specifications for materials (submittals) to be used on the project will be submitted to the City Engineer prior to the start of construction. The submittal will include a letter with:

1. **Product –** A description of the product and the appropriate materials specification section number.

2. **Contact –** The name and telephone number of the contact person for the proposed product.

3. **Reference –** A list of other agencies who are using the proposed product (include names and telephone numbers)

   Address the letter to the City of Lincoln Engineering Department at 600 Sixth Street, Lincoln, CA 95648, ATTN: City Engineer. City staff may request a sample of the product for review.

   Criteria and designs standards for review of the system components will be as outlined in Lincoln Design Criteria & Procedures Manual. The Contractor will

submit all material for review 35-days prior to construction. All submittals will include documentation verifying contract award date and start date. Contractors will allow 2 to 4 weeks of review time by the City Engineer or his/her delegated representative.

B. **Unapproved Materials –** Materials not approved for use on the project will be removed from the site within 24-hours if requested by the City Engineer.

C. **Backfill Material –** Detailed specifications for backfill material are provided in Section 5-11.

D. **VCP Sewer Main and Service Laterals** - Unless noted on the approved plans, all pipes will be Extra Strength Class Vitrified Clay Pipe Bell and Spigot (VCP), conforming to ASTM C700-C301, C828, C425, and C12 Standards. For diameters greater than 15-inch, pipe bell and spigot to be new High Strength Class. The VCP will not be dipped in a solution to enhance air pressure tests.

E. **PVC Sewer Force Main –** Force Mains less than 6" will be constructed of PVC Schedule 80.

F. **HDPE Sewer Force Main –** Force Mains 6" in diameter or larger will be constructed of High Density Polyethylene (HDPE) with butt-fused joints and wall thickness of not less than DR11.

G. **Cleanout** - Cleanout access boxes in paved areas will be Christy G5, Christy F08 valve box or equal. Cleanout access boxes in roadways and driveways will be traffic-rated. Cleanout access boxes in landscaped areas will be Carson 910 or equal.

H. **Manholes** - Manholes, frames and covers are to be in accordance with Standard Details SS-3, SS-4 and SS-5. All materials used in cast-in-place concrete or precast concrete will conform to ASTM C-150 Specifications with Type V cement for sulfate protection.

1. **Barrels, Cones and Lids** (all materials to be USA made)

   a. **48-inch Manhole Material**: Jensen Precast, Oldcastle Precast, or approved equal

   b. **60-inch Manhole Material:** Jensen Precast, Oldcastle Precast, or approved equal

   c. **72-inch Manhole Material**: Jensen Precast, Oldcastle Precast, or approved equal

2. **Manhole Frame and Cover:** D & L Supply or approved equal

3. **Precast Manhole Base:** Jensen Precast or approved equal

J. Appurtenances

1. **Air Release Valve –** APCO Model 450 or approved equal.

2. **Clay to Concrete Sealant –** Sikaflex® or approved equal.

3. **Cleanout Caps –** ABS.

4. **Couplings –** For 4-inch lines, use Flex Seal Repair Couplings for ABS. Cap only, or approved equal. For 4-inch to 12-inch lines, use Mission Rubber Repair Coupling or approved equal. Couplings may not be used in new construction.

5. **Flange Gaskets -** All flange gaskets to be neoprene rubber or red rubber, USSO Standard B.16.21 insulation flange kits - Calpico Type E full-face gasket with two-side insulation.

6. **Joint Sealing Compound -** RAM-NEK®, Con Seal Compound or approved equal

7. **Location Stakes -** Carsonite CRM3 072 07 with anchor barb kit or approved equal with caution stickers attached and organization identification decal stating: CITY OF LINCOLN - CALL BEFORE DIGGING (916) 434-2450.

   For pressurized sewer mains, use decal 1977CPS-A or approved equal. For gravity sewer mains, use decal 225CS-A or approved equal.

8. **Mortar -** Non-shrink grout during manhole vacuum testing and as specified. Standard mortar mix for all other applications.

9. **Silicone -**100% silicone with a 25-year life or approved equal.

10. **Sulfide Protection -** Hydro Pox 204 or approved equal.

11. **Wastewater Marking Tape -** 12” wide detectable warning tape; Northtown Company, Christy, or approved equal. #10 insulated copper tracer wire to be used on PVC or HDPE sewer force main pipe.

12. **Parshall Flume -** Plasti-Fab or equal. City will specify the size and location of the flume on a case-by-case basis.

[THIS PAGE INTENTIONALLY LEFT BLANK]

SEWER DETAILS

Sewer Trench Detail *SS-1*
Manhole Backfill Detail *SS-1A*
Inside Drop Connection Detail *SS-2*
Sewer Manhole Cover *SS-3*
Eccentric Manhole Detail (6”-24” Diameter Pipe) *SS-4*
Shallow Manhole Detail (6”-24” Diameter Pipe) *SS-5*
Cleanout to Grade (Sewer Connected to Wye) *SS-6*
ABS, PVC, VCP Cleanout to Grade (Sewer Connected to Riser) *SS-7*
Cut-Off Wall Detail *SS-8*
Concrete Encasement Detail *SS-9*
Sanitary Sewer and Water Main Separation Details *SS-10*
Sewer Tee Details *SS-11*
Sewer Lateral Details *SS-12*
Backwater Overflow System and Standard 4” Cleanout Detail *SS-13*
Anchor Detail *SS-14*
Standard 60” & 72” Diameter Sewer Manholes *SS-15*
Saddle Manhole *SS-16*
Deep Sewer Trench Detail *SS-17*

[THIS PAGE INTENTIONALLY LEFT BLANK]

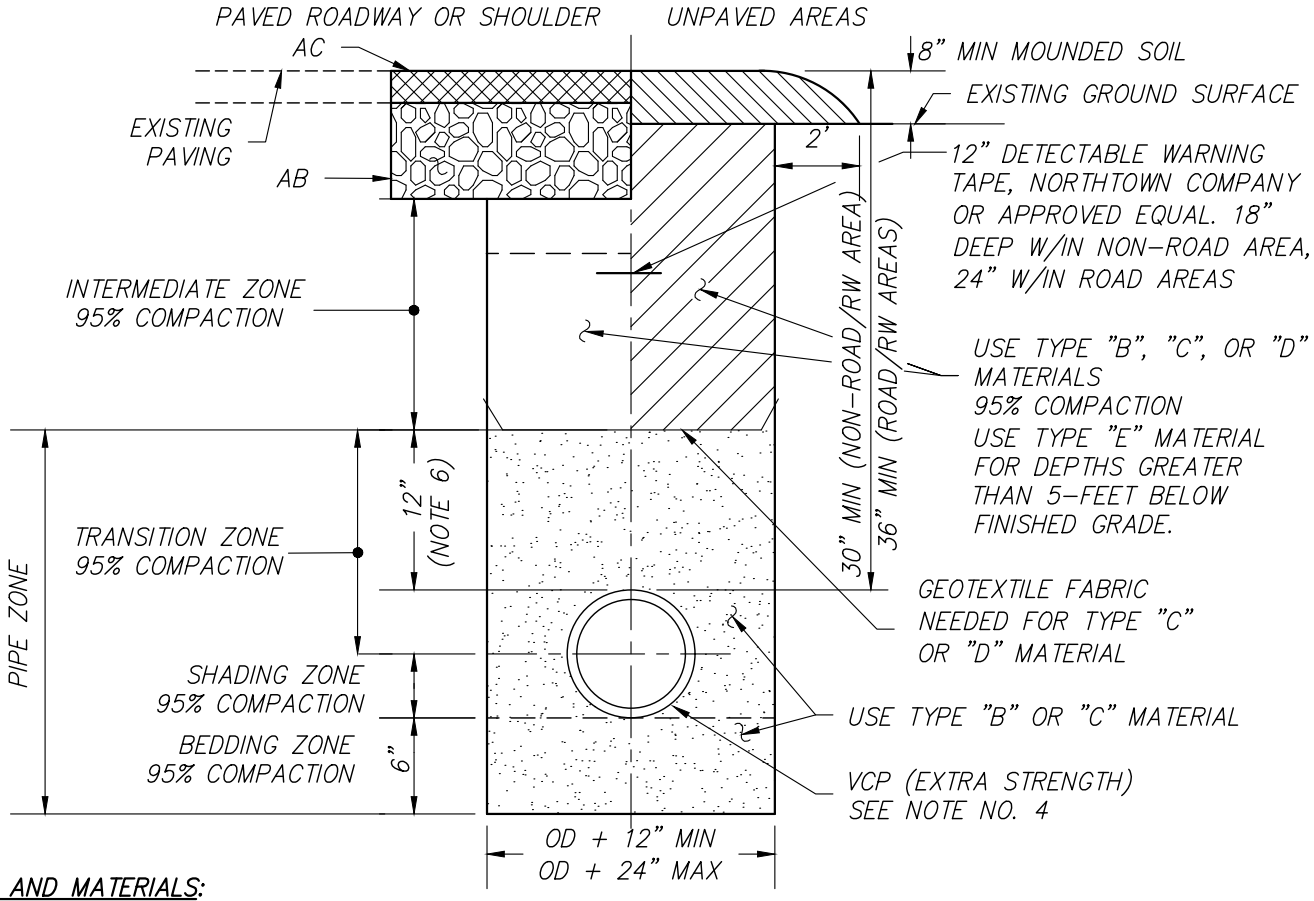

BEDDING AND MATERIALS:

TYPE "B" MATERIAL: CLASS 2 AGGREGATE BASE PER CALTRANS STANDARD SPECIFICATIONS.

TYPE "C" MATERIAL: MATERIAL WILL CONSIST OF GRAVEL OR CRUSHED ROCK. MATERIAL WILL BE SCREENED AND NON-WASHED WITH A MINIMUM SAND EQUIVALENT OF 30 PER CTM217. ALL MATERIAL WILL BE FREE OF WOOD, ROOTS, OR OTHER DELETERIOUS MATERIAL. MATERIAL TO BE 1/2" MINUS FOR 12-INCH PIPE OR SMALLER AND 3/4" MINUS FOR PIPE GREATER THAN 12-INCHES IN DIAMETER. GROUNDWATER CONDITIONS WILL REQUIRE 3/4" UNIFORM CRUSHED ROCK REGARDLESS OF PIPE DIAMETER. DRAIN ROCK WILL BE WRAPPED IN A LAYER OF GEOTEXTILE FABRIC.

TYPE "D" MATERIAL: CRUSHED ROCK OR SOIL-ROCK MIXTURE (NATIVE) NOT TO EXCEED 3". UP TO A 6" MINUS MATERIAL MAY BE USED WITH SPECIAL CONSIDERATIONS AND CONDITIONS APPROVED BY CITY AND GEOTECHNICAL ENGINEER. THE MATERIAL WILL BE COMPLETELY FREE OF WOOD, ROOTS OR OTHER DELETERIOUS MATERIAL. MATERIAL NOT BE USED WITHIN 24" OF TOP OF PIPE WITHOUT CITY ENGINEERS APPROVAL. COMPACTION WILL BE BY VIBRATORY EQUIPMENT OR OTHER APPROVED DEVICES. THE CITY MAY REQUIRE THAT THE MATERIAL BE SCREENED. A LAYER OF GEOTEXTILE FABRIC WILL BE PLACED BETWEEN THE PIPES AND INTERMEDIATE BACKFILL ZONE. MATERIAL WILL ONLY BE USED WITH GEOTECHNICAL ENGINEER'S RECOMMENDATION AND WITH APPROVAL OF THE CITY ENGINEER.

TYPE "E" MATERIAL: A LOW STRENGTH, CONCRETE SLURRY TYPE BACKFILL MATERIAL MADE WITH A MIXTURE OF CEMENT, FLY-ASH, SAND, AND AGGREGATE. TO BE USED FOR INTERMEDIATE ZONE BACKFILL AT DEPTHS GREATER THAN 5-FEET BELOW FINISHED GRADE. FOR REFERENCE, REFER TO SECTION 3-9 "MATERIAL".

NOTES:

1. CREEK CROSSING OR SHALLOW TRENCH SHALL REQUIRE SPECIAL PIPE PER APPROVAL OF CITY ENGINEER.
2. BEDDING FOR OTHER APPROVED PIPE TO BE APPROVED BY CITY ENGINEER AND PER ASTM C12.
3. CITY WILL REQUIRE CUT-OFF WALLS IN TRENCHES TO CONTROL PERMEABILITY AND/OR REQUIRE GEOTEXTILE BARRIER WRAP FOR MATERIAL NOT MEETING A TYPE "A" OR "B" MATERIAL SPEC.
4. PIPE TO BE VCP (EXTRA STRENGTH) OR 12" DIA. OR LESS HIGH STRENGTH FOR 15" DIA. OR GREATER, EXCEPT AS REQUIRED BY CITY ENGINEER
5. SHOVEL SLICING TO BE USED ALONG WITH MECHANICAL (VIBRATORY) AT 12" MAX LOOSE LIFTS.
6. TYPE "D" MATERIAL REQUIRES 24" INCHES BACKFILL ABOVE PIPE.
7. TYPE "C" AND "D" MATERIALS MAY ONLY BE USED WITH CITY ENGINEER APPROVAL AND GEOTECHNICAL ENGINEER RECOMMENDATION.

CITY OF LINCOLN
ENGINEERING DEPARTMENT

SEWER TRENCH DETAIL

REVISIONS:	DATES:	APPROVED:
		CITY ENGINEER DATE

SCALE: NONE
DATE: SEPTEMBER 2019
DRAWN BY: C.G.

SS-1

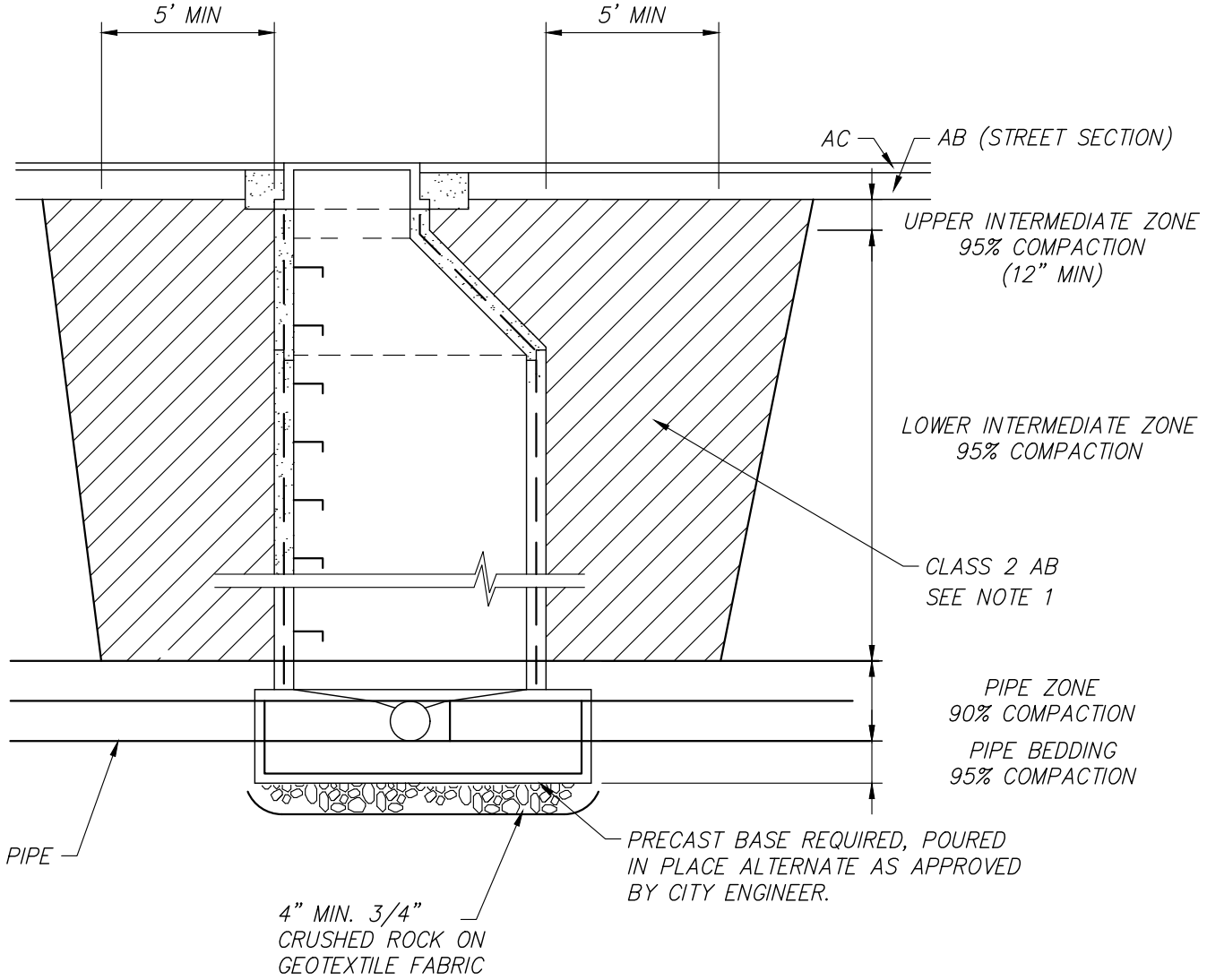

NOTES:

1. FOR DEPTHS GREATER THAN 5-FEET BELOW FINISHED GRADE, BACKFILL WITH TYPE "E" MATERIAL (SEE DETAIL SS-1).

CITY OF LINCOLN
ENGINEERING DEPARTMENT

MANHOLE
BACKFILL DETAIL

REVISIONS:	DATES:	APPROVED:	SCALE: NONE DATE: SEPTEMBER 2019 DRAWN BY: C.G.	SS-1A
		CITY ENGINEER DATE		

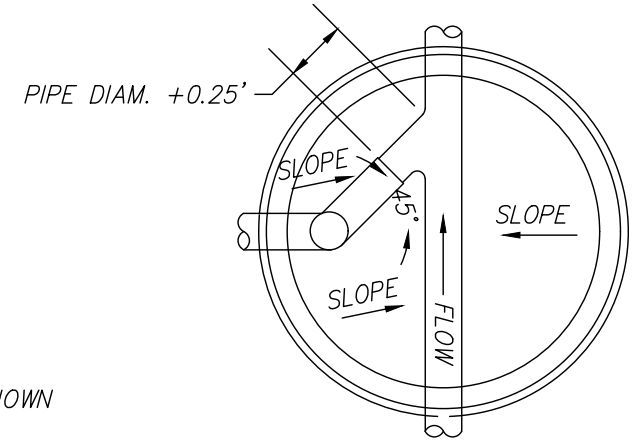

PLAN

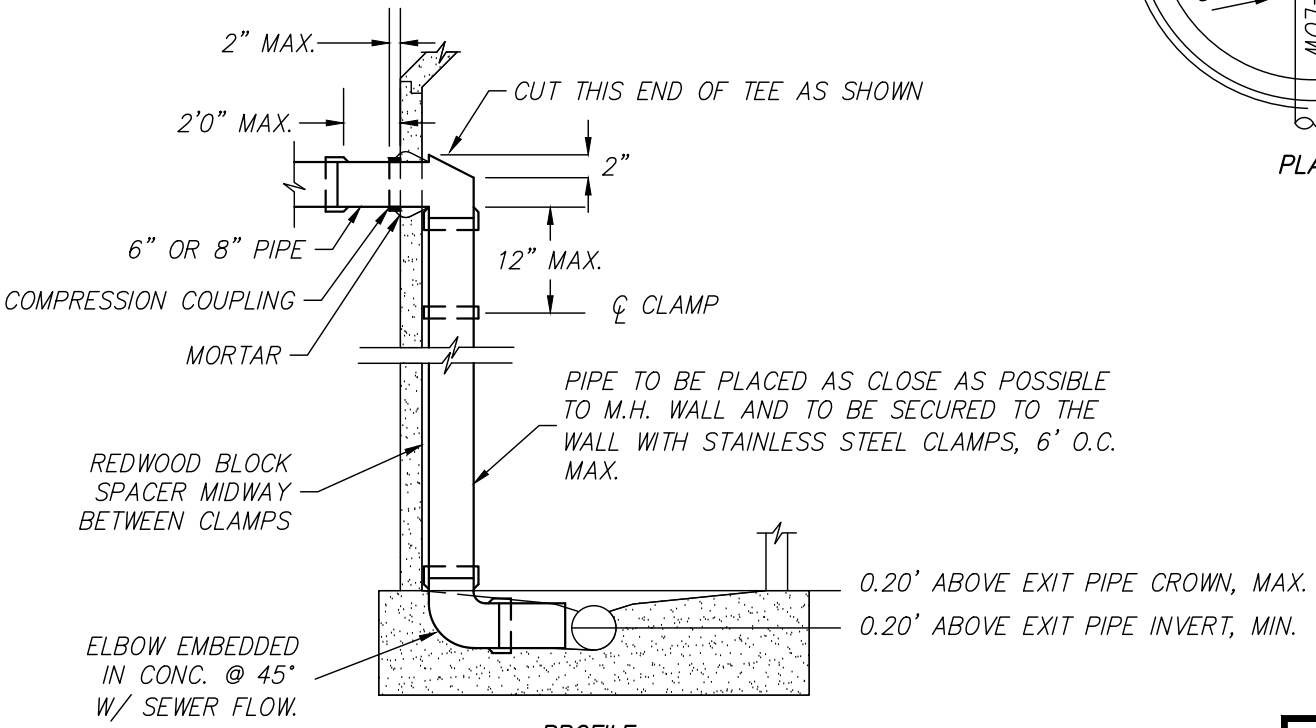

PROFILE

NOTE:

1. ALL INSIDE DROP PIPING TO BE P.V.C. OR A.B.S.
2. CEMENT ALL JOINTS.
3. DROP CONNECTION PIPE AND FITTINGS TO BE SAME SIZE AS ENTERING PIPE. CLAMPS TO BE 11/2:x12 GAUGE
4. STAINLESS STEEL, ANCHORED TO M.H. WALL WITH 2-1/2" CADMIUM PLATED BOLTS.

CITY OF LINCOLN
ENGINEERING DEPARTMENT

INSIDE DROP CONNECTION DETAIL

REVISIONS:	DATES:	APPROVED:
		CITY ENGINEER DATE

SCALE: NONE
DATE: SEPTEMBER 2019
DRAWN BY: C.G.

SS-2

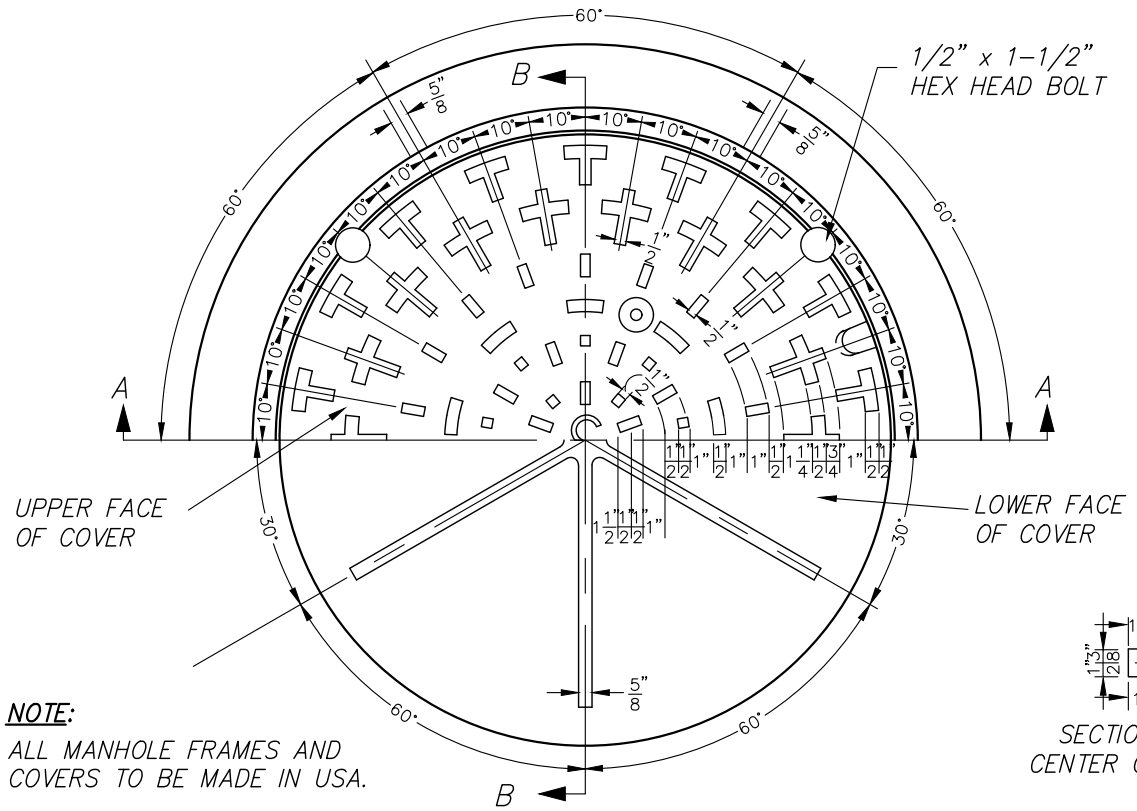

NOTE:
ALL MANHOLE FRAMES AND COVERS TO BE MADE IN USA.

HALF PLAN OF HEAD AND COVER

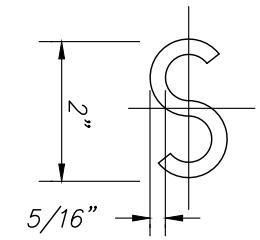

LETTER 'S' AT
CENTER OF COVER

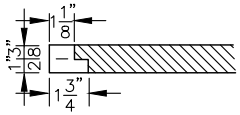

SECTION THROUGH
CENTER OF PICK HOLE

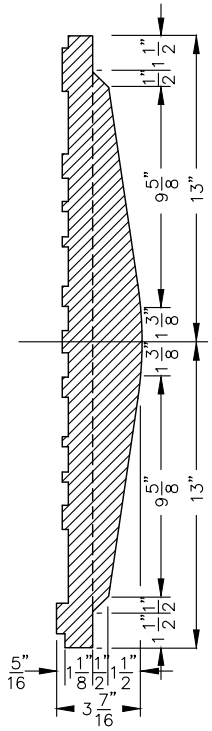

SECTION B-B

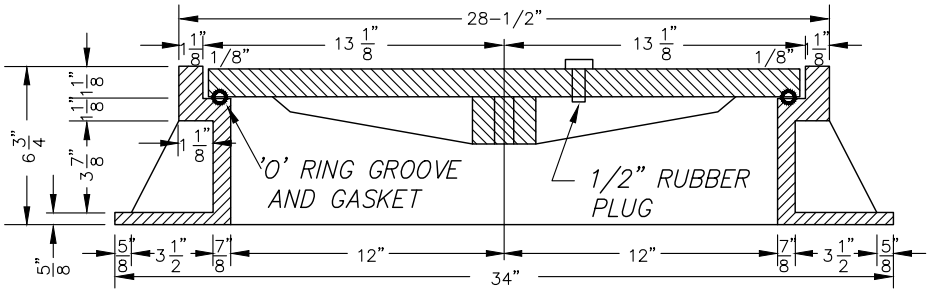

SECTION A-A

CITY OF LINCOLN
ENGINEERING DEPARTMENT

SEWER MANHOLE COVER

REVISIONS:	DATES:	APPROVED:
		CITY ENGINEER DATE

SCALE: NONE
DATE: SEPTEMBER 2019
DRAWN BY: C.G.

SS-3

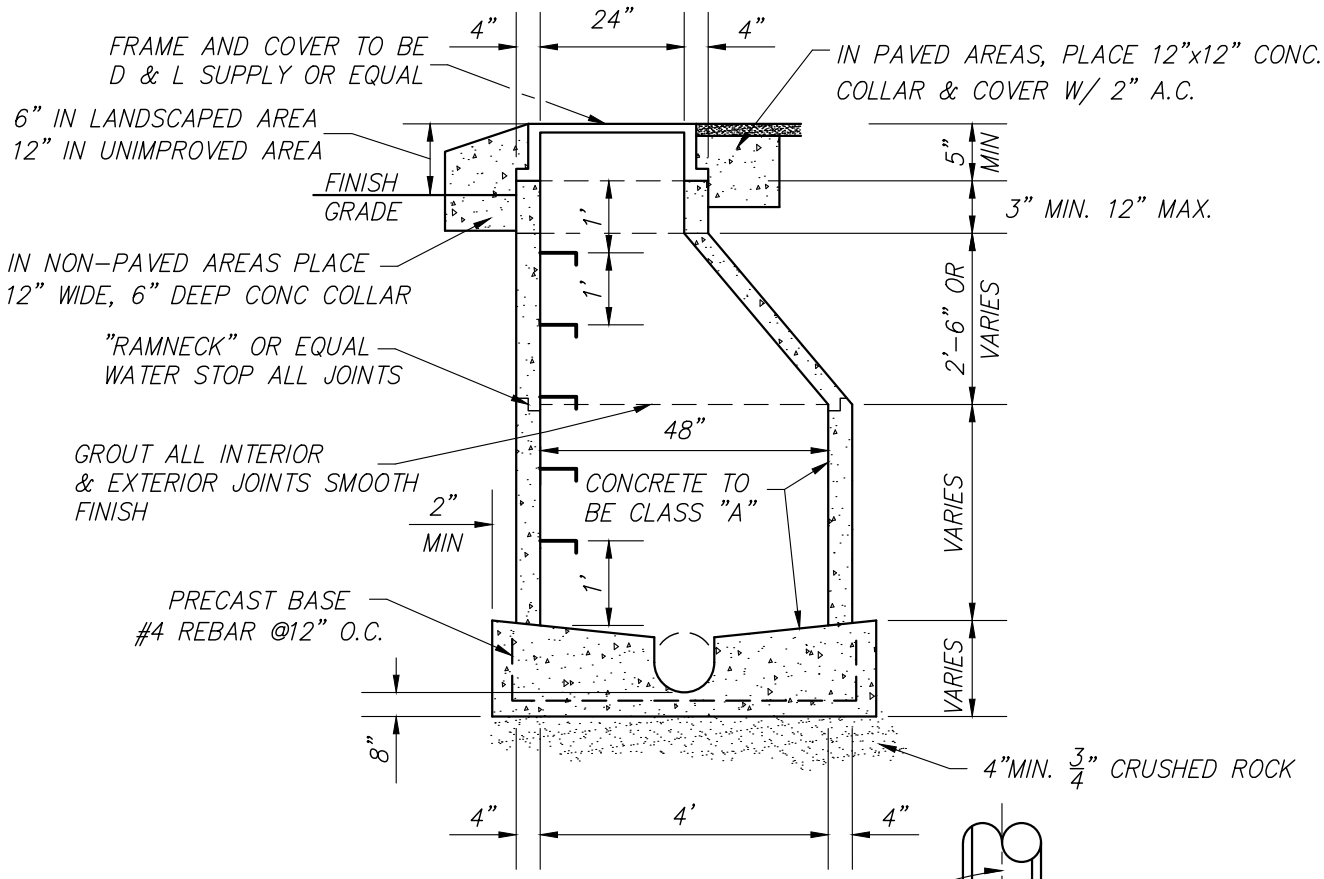

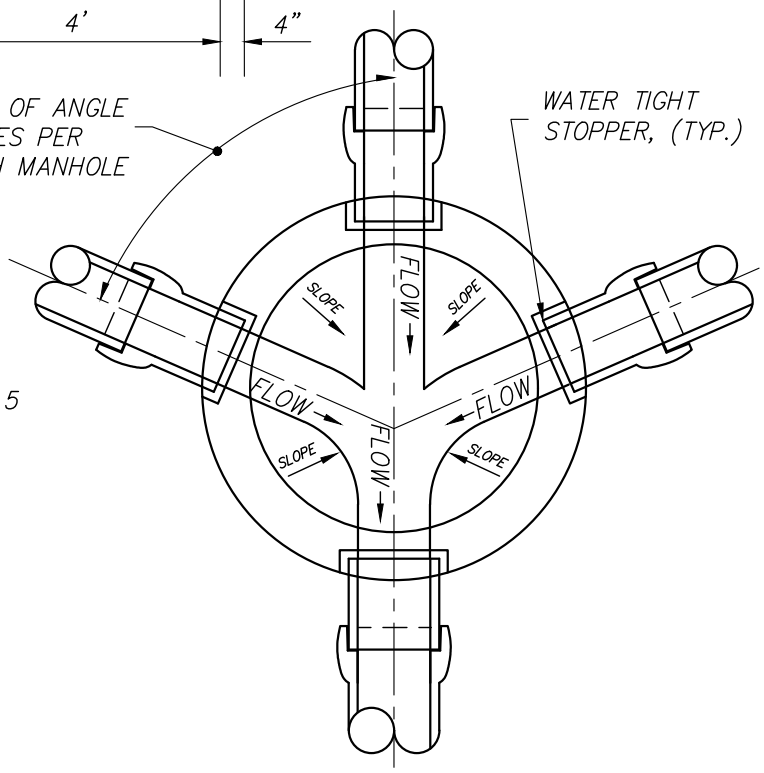

NOTES:

1. ECCENTRIC CONE FOR DEPTHS GREATER THAN 5 FEET AND PLACE OPENING OVER UPSTREAM INVERT OF MANHOLE.
2. ALL MANHOLE BASES TO BE PRECAST UNLESS OTHERWISE APPROVED BY CITY ENGINEER.
3. BASE TO HAVE 0.1' FALL FROM INVERT INLET TO INVERT EXIT.
4. CLASS "A" CONCRETE 3000 P.S.I. MIN. 28 DAYS.
5. M.H. LIDS SHALL BE SEALED WITH AN APPROVED RUBBER GASKET.
6. FIXED POLYPROPYLENE LADDERS TO BE 14" WIDE INSTALLED IN WALLS OF MANHOLE,
7. ALL M.H. JOINTS TO BE TONGUE AND GROOVE.
8. SEE SS-1A FOR BACKFILL REQUIREMENTS.

CITY OF LINCOLN
ENGINEERING DEPARTMENT

ECCENTRIC MANHOLE DETAIL
(6"-24" DIAMETER PIPE)

REVISIONS:	DATES:	APPROVED:
		CITY ENGINEER DATE

SCALE: NONE
DATE: SEPTEMBER 2019
DRAWN BY: C.G.

SS-4

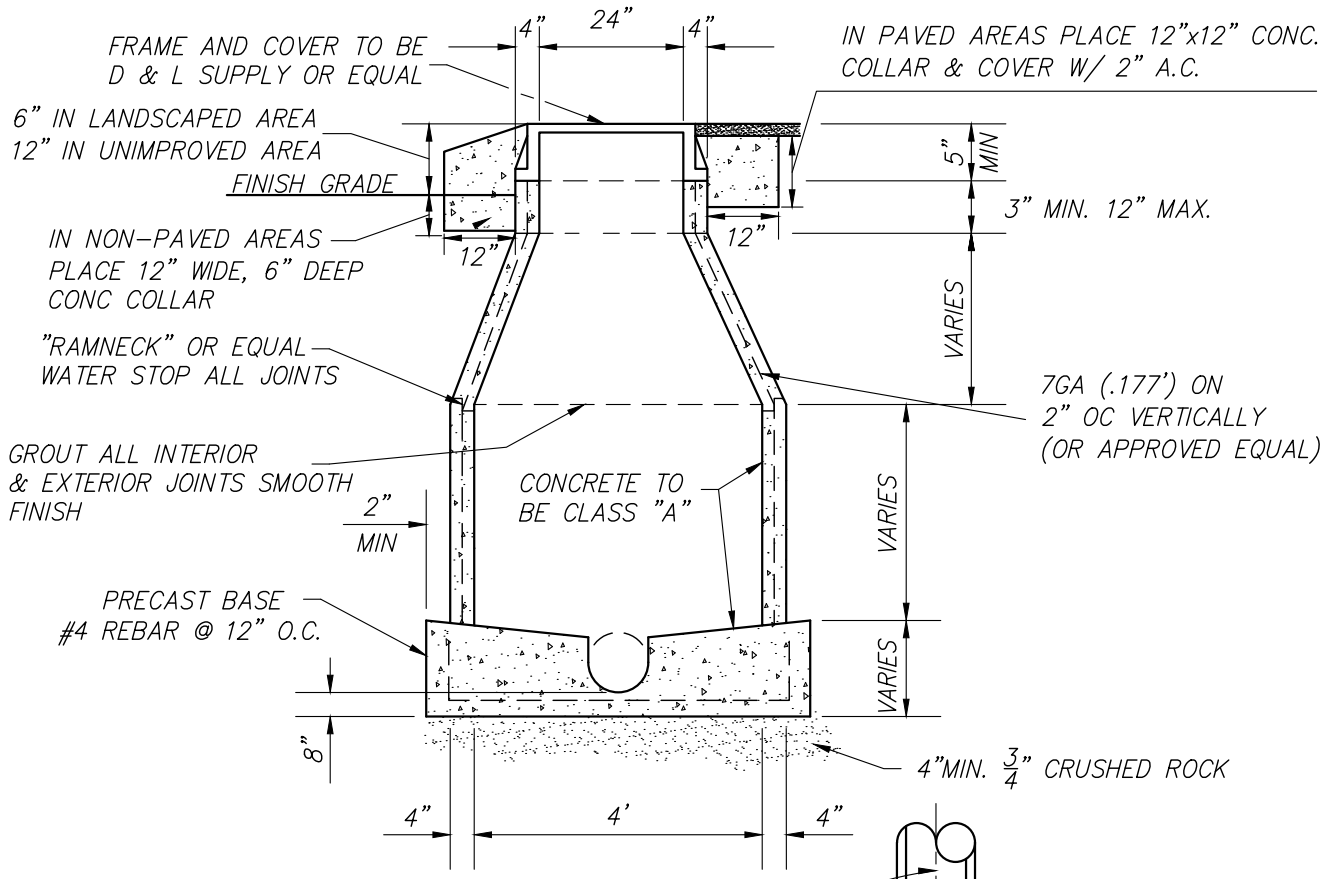

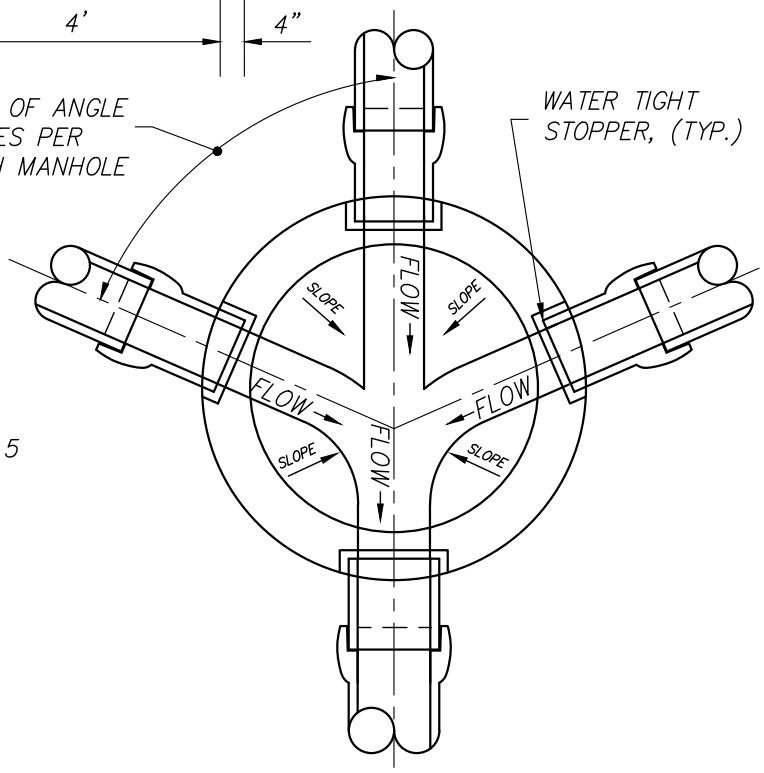

NOTES:

1. ECCENTRIC CONE FOR DEPTHS GREATER THAN 5 FEET (SEE SS-4).
2. ALL MANHOLE BASES TO BE PRECAST UNLESS OTHERWISE APPROVED BY CITY ENGINEER.
3. BASE TO HAVE 0.1' FALL FROM INVERT INLET TO INVERT EXIT.
4. CLASS "A" CONCRETE 3000 P.S.I. MIN. 28 DAYS.
5. 60" MANHOLES TO BE USED FOR PIPES GREATER THEN 24" IN DIAMETER.
6. NO CAULDER OR REPAIR COUPLINGS SHALL BE USED FOR NEW CONSTRUCTION.
7. ALL M.H. JOINTS TO BE TONGUE AND GROOVE
8. SEE SS-1A FOR BACKFILL REQUIREMENTS.

CITY OF LINCOLN
ENGINEERING DEPARTMENT

SHALLOW MANHOLE DETAIL
(6"-24" DIAMETER PIPE)

REVISIONS:	DATES:	APPROVED:
		CITY ENGINEER DATE

SCALE: NONE
DATE: SEPTEMBER 2019
DRAWN BY: C.G.

SS-5

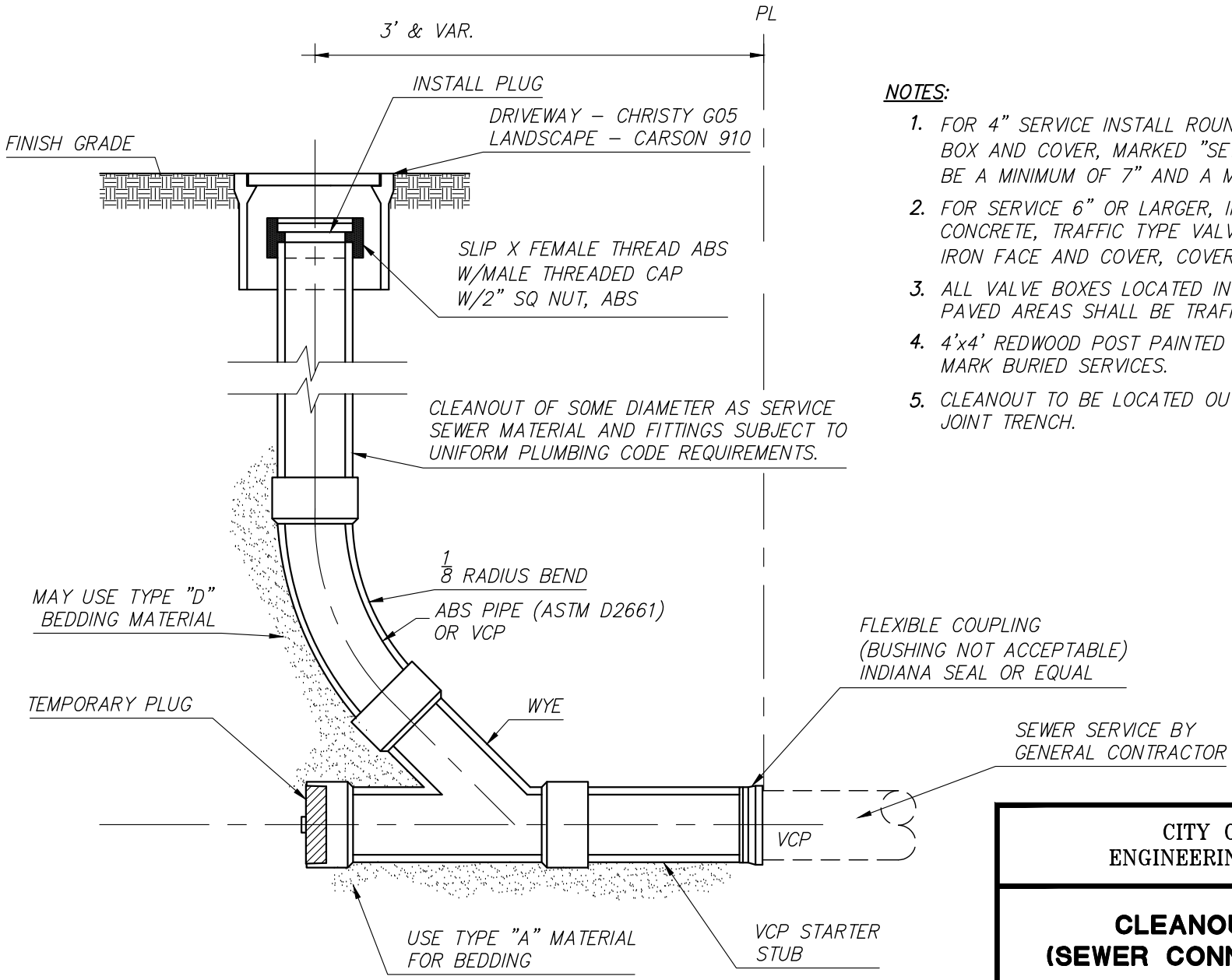

NOTES:

1. FOR 4" SERVICE INSTALL ROUND, CONCRETE OR PVC VALVE BOX AND COVER, MARKED "SEWER". INSIDE DIAMETER TO BE A MINIMUM OF 7" AND A MAXIMUM OF 10".
2. FOR SERVICE 6" OR LARGER, INSTALL ROUND, CONCRETE, TRAFFIC TYPE VALVE BOX WITH CAST IRON FACE AND COVER, COVER TO BE MARKED "SEWER".
3. ALL VALVE BOXES LOCATED IN CONCRETE OR ASPHALT PAVED AREAS SHALL BE TRAFFIC TYPE.
4. 4'x4' REDWOOD POST PAINTED GREEN MAY BE USED TO MARK BURIED SERVICES.
5. CLEANOUT TO BE LOCATED OUTSIDE OF DRY UTILITY JOINT TRENCH.

CITY OF LINCOLN
ENGINEERING DEPARTMENT

CLEANOUT TO GRADE
(SEWER CONNECTED TO "WYE")

REVISIONS:	DATES:	APPROVED:
		CITY ENGINEER DATE

SCALE: NONE
DATE: SEPTEMBER 2019
DRAWN BY: C.G.

SS-6

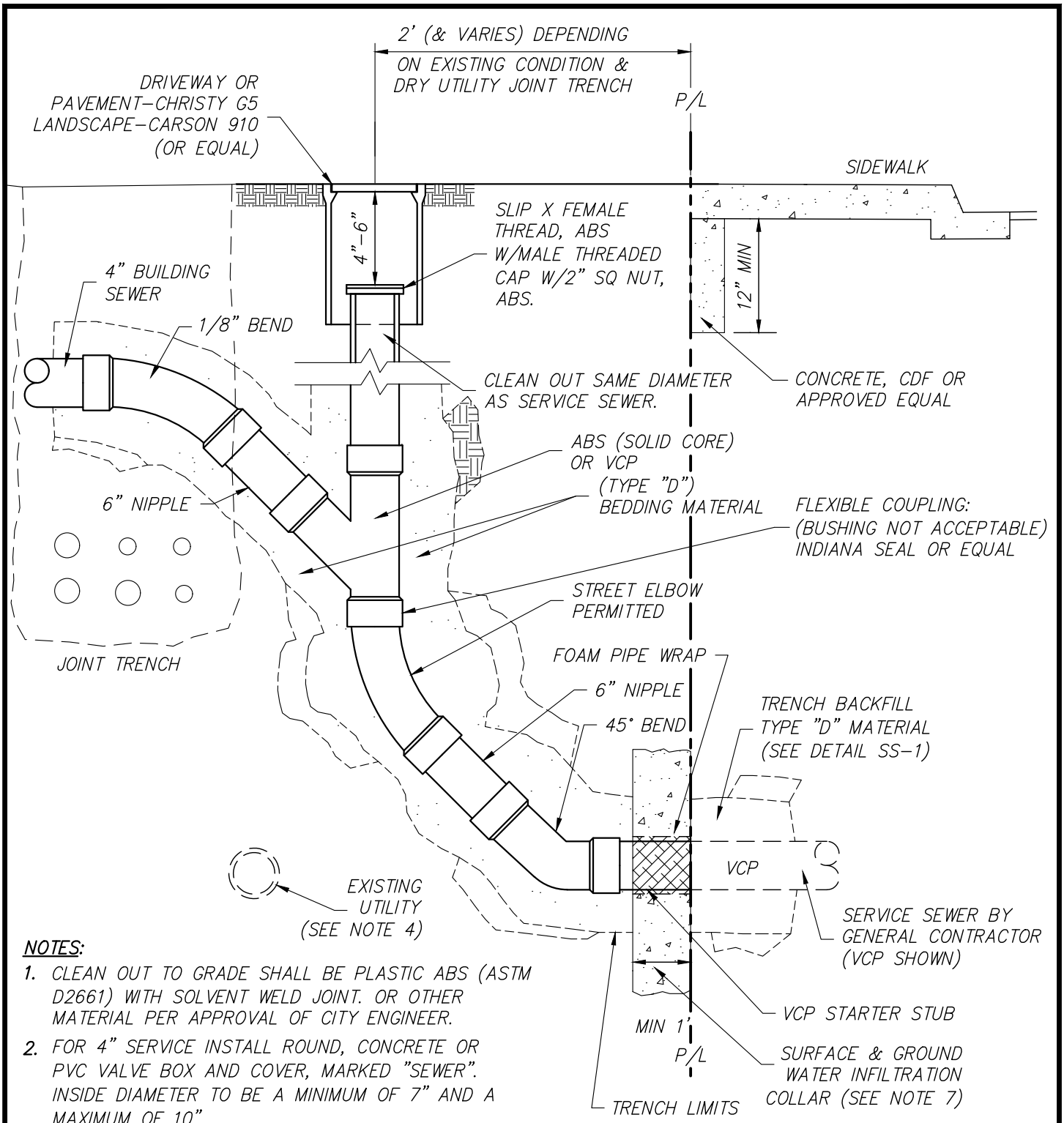

NOTES:

1. CLEAN OUT TO GRADE SHALL BE PLASTIC ABS (ASTM D2661) WITH SOLVENT WELD JOINT. OR OTHER MATERIAL PER APPROVAL OF CITY ENGINEER.
2. FOR 4" SERVICE INSTALL ROUND, CONCRETE OR PVC VALVE BOX AND COVER, MARKED "SEWER". INSIDE DIAMETER TO BE A MINIMUM OF 7" AND A MAXIMUM OF 10".
3. FOR SERVICE 6" OR LARGER, INSTALL ROUND, CONCRETE, TRAFFIC TYPE VALVE BOX WITH CAST IRON FACE AND COVER, COVER TO BE MARKED "SEWER".
4. INSTALLATION TO AVOID EXISTING UTILITY ONLY.
5. CLEANOUT TO BE PLACED AT A MINIMUM 4' DEPTH AND AT A MAXIMUM 5' DEPTH.
6. 4'x4' REDWOOD POST PAINTED GREEN MAY BE USED TO MARK BURIED SERVICES.
7. USE EITHER CONTROLLED DENSITY FILL, BENTONITE, OR APPROVED EQUAL.

CITY OF LINCOLN
ENGINEERING DEPARTMENT

ABS, PVC, OR VCP
CLEANOUT TO GRADE
(SEWER CONNECTED TO RISER)

REVISIONS:	DATES:	APPROVED:
		CITY ENGINEER DATE

SCALE: NONE
DATE: SEPTEMBER 2019
DRAWN BY: C.G.

SS-7

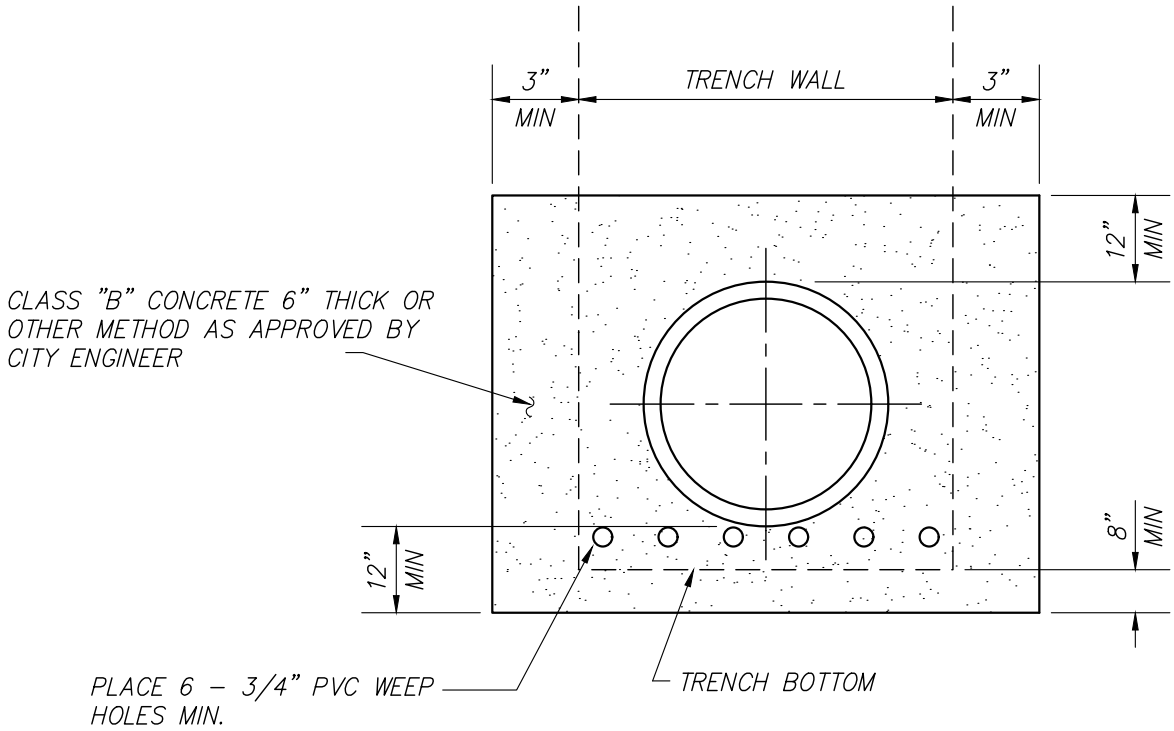

CUT-OFF WALL DETAIL

NOTES:

1. CUT-OFF WALL TO BE PLACED 3' MIN. AWAY FROM PIPE JOINT.
2. CUT-OFF WALL TO BE INSTALLED PER DIRECTION OF GEOTECHNICAL ENGINEER AND/OR CITY ENGINEER.
3. ALL CUT OFF WALLS TO BE SPACED AT A MINIMUM 1000' SPACING.
4. OPTIONAL MATERIALS TO BE 2 SACK SAND CEMENT SLURRY OR BENTONITE CLAY, AND MUST BE APPROVED BY THE CITY ENGINEER.
5. CUT-OFF WALLS REQUIRED IN TRENCHES WITH A SLOPE GREATER THAN 2%.
6. CUT-OFF TRENCHES TO BE REQUIRED BY CITY ENGINEER AT SPECIFIED LOCATIONS TO DIVERT TRENCH WATER.

CITY OF LINCOLN
ENGINEERING DEPARTMENT

CUT-OFF WALL DETAIL

REVISIONS:	DATES:	APPROVED:
		CITY ENGINEER DATE

SCALE: NONE
DATE: SEPTEMBER 2019
DRAWN BY: C.G.

SS-8

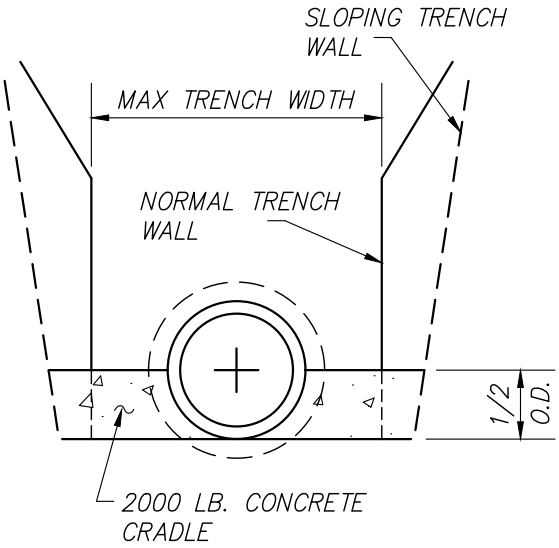

CRADLE FOR EXCESSIVE TRENCH BOTTOM WIDTH

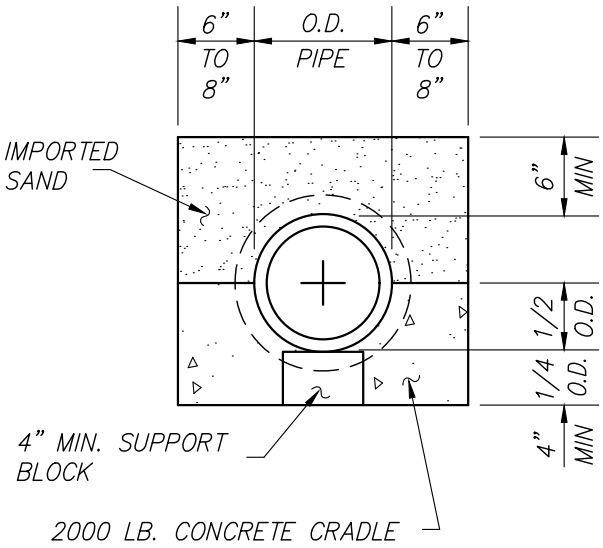

CONCRETE BLOCK

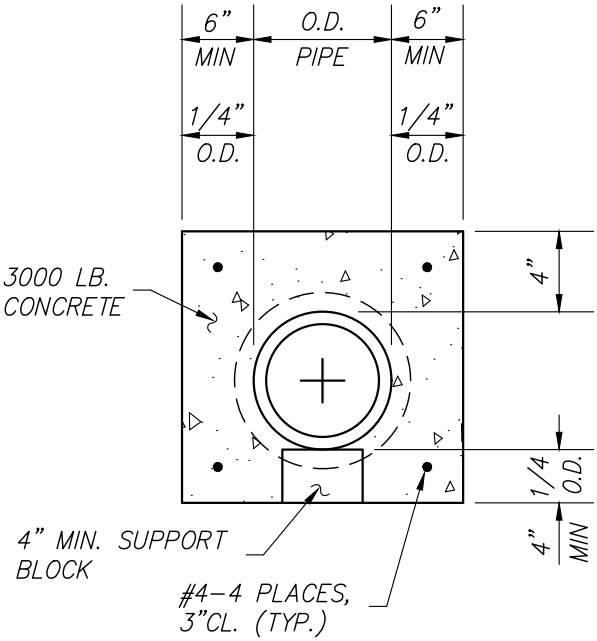

CONCRETE ENCASEMENT

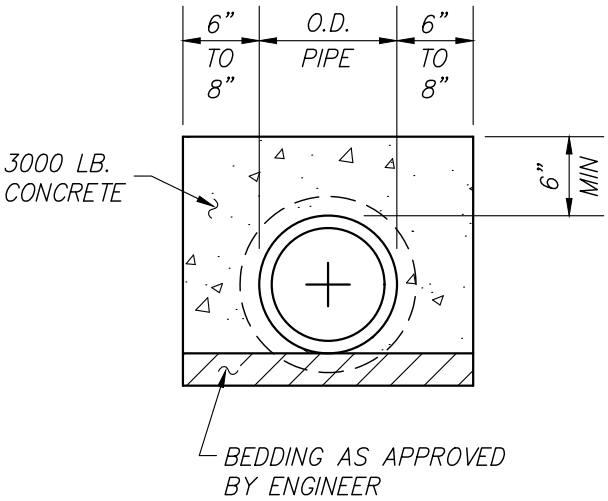

CONCRETE JACKET

NOTES:

1. ALL PIPING VITRIFIED CLAY PIPE (VCP) AND POLY WRAPPED UNLESS OTHERWISE SPECIFIED BY CITY ENGINEER.
2. SUBSTITUTE MATERIALS CAN BE USED FOR CONCRETE JACKETS AND ENCASEMENT PER APPROVAL BY THE CITY ENGINEER.

CITY OF LINCOLN
ENGINEERING DEPARTMENT

CONCRETE ENCASEMENT DETAIL

REVISIONS:	DATES:	APPROVED:
		CITY ENGINEER DATE

SCALE: NONE
DATE: SEPTEMBER 2019
DRAWN BY: C.G.

SS-9

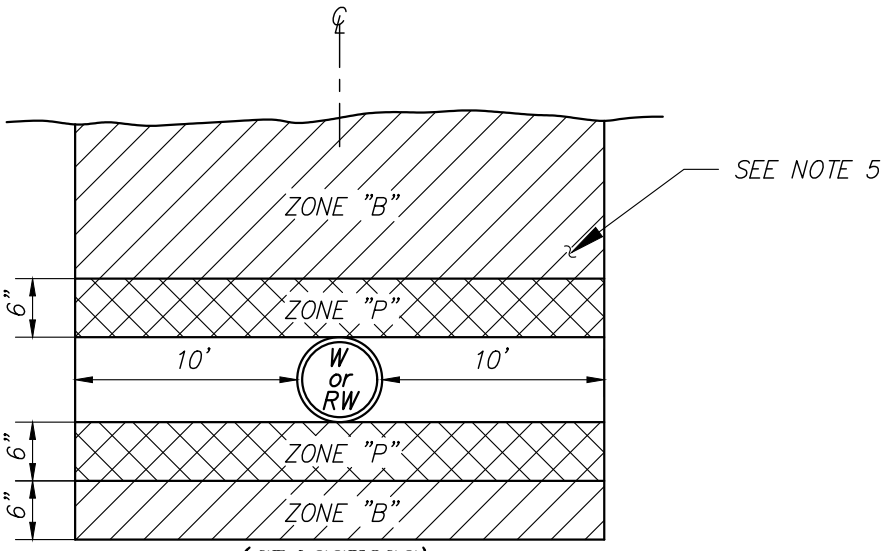

(CROSSINGS)

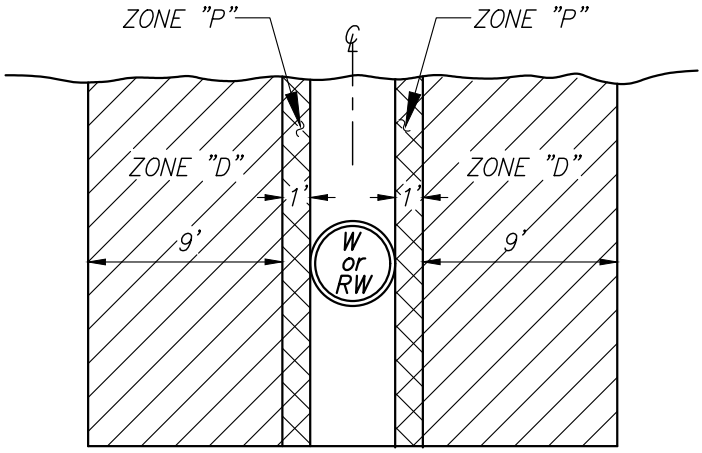

(PARALLEL CONSTRUCTION)

SANITARY SEWER & WATER OR RECYCLED WATER MAIN DETAIL

NOTES:

1. ALL ZONES REQUIRE REVIEW BY CITY ENGINEER.
2. ZONE "B" SPECIAL PIPE REQUIRED, NO JOINTS, REQUIRES CITY AND DIVISION OF DRINKING WATER APPROVAL.
3. ZONE "D" SPECIAL PIPE REQUIRED, REQUIRES CITY AND DIVISION OF DRINKING WATER APPROVAL.
4. ZONE "P" PROHIBITED, NO PIPES.
5. NO JOINTS TO BE WITHIN 10' OF EDGE OF WATER MAIN EXCEPT AS APPROVED BY CITY ENGINEER AND DIVISION OF DRINKING WATER.

CITY OF LINCOLN
ENGINEERING DEPARTMENT

SANITARY SEWER AND WATER OR RECYCLED WATER MAIN SEPARATION DETAILS

REVISIONS:	DATES:	APPROVED:
		CITY ENGINEER DATE

SCALE: NONE
DATE: SEPTEMBER 2019
DRAWN BY: C.G.

SS-10

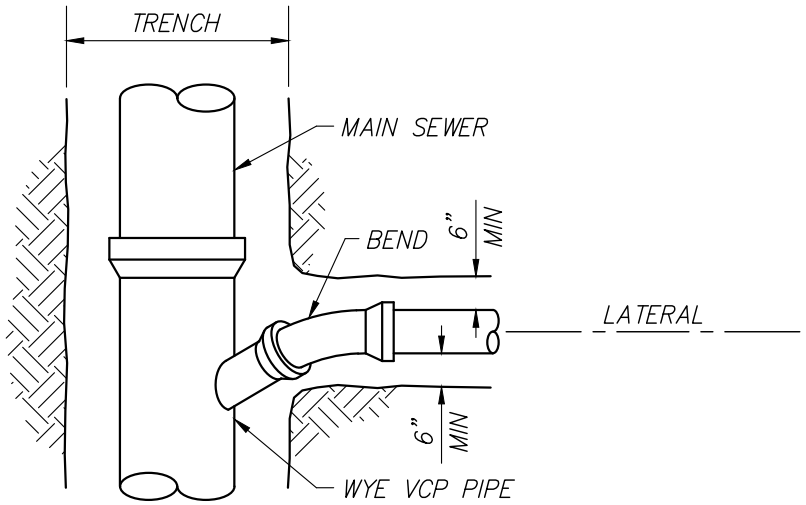

PLAN

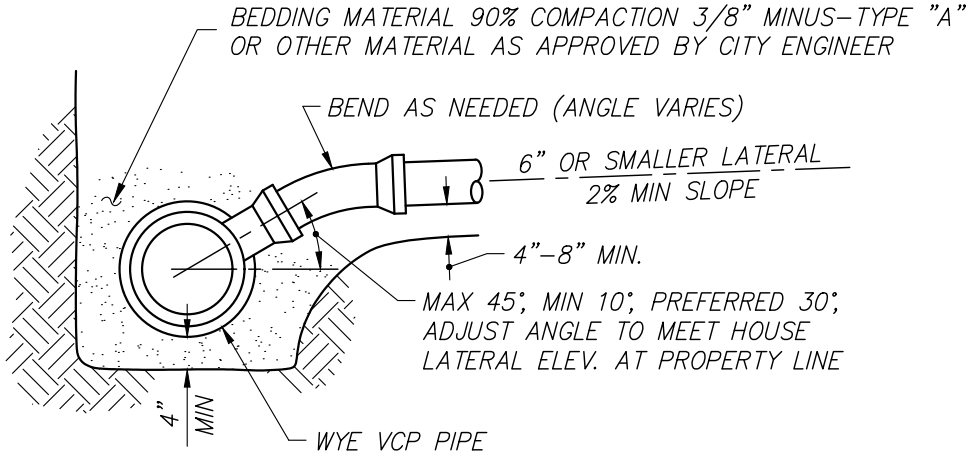

ELEVATION

NOTES:

1. WYES AT VERTICAL ANGLES GREATER THAN 45°, ONLY AT PROPERTY LINE (SEE DETAIL SS-7)
2. EXTRA CARE SHALL BE TAKEN IN PLACING & COMPACTING MATERIAL FOR WYE SUPPORT, TAMP UNDER & AROUND ALL FITTINGS.
3. TYPE "A" 3/8" MINUS PER SEWER TRENCH DETAIL SS-1. (24" ABOVE PIPE IF TYPE D MATERIAL IS USED IN INTERMEDIATE ZONE).

CITY OF LINCOLN
ENGINEERING DEPARTMENT

SEWER WYE DETAIL

REVISIONS:	DATES:	APPROVED:
		CITY ENGINEER DATE

SCALE: NONE
DATE: SEPTEMBER 2019
DRAWN BY: C.G.

SS-11

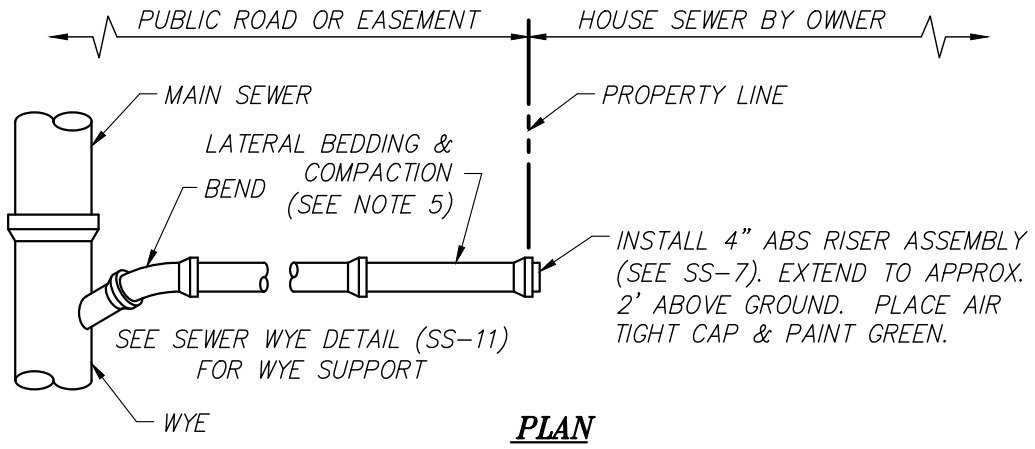

PLAN

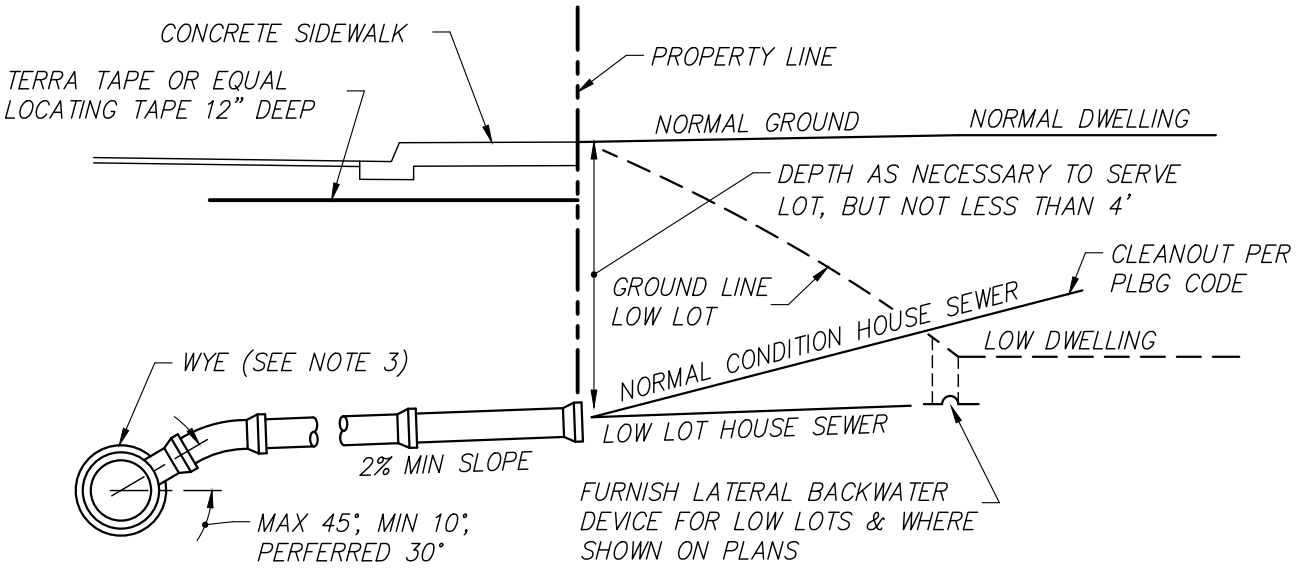

ELEVATION

NOTES:

1. LOCATE LATERAL IN ACCORDANCE WITH SEWER AND WATER OR RECYCLED WATER SEPARATION DETAIL. (SEE DETAIL SS-10)
2. LARGER THAN 6" SHALL BE CONNECTED TO MAIN WITH A MANHOLE.
3. SEE SEWER WYE DETAIL SS-11.
4. FIELD CUT PIPE JOINTS SHALL USE FERNCO OR EQUAL MOLDED COUPLING.
5. BEDDING AND PIPE BACKFILL TO BE 3/8" MINUS. 24" ABOVE PIPE IF TYPE "D" MATERIAL IS USED IN INTERMEDIATE ZONE

CITY OF LINCOLN
ENGINEERING DEPARTMENT

SEWER LATERAL DETAIL

REVISIONS:	DATES:	APPROVED:
		CITY ENGINEER DATE

SCALE: NONE
DATE: SEPTEMBER 2019
DRAWN BY: C.G.

SS-12

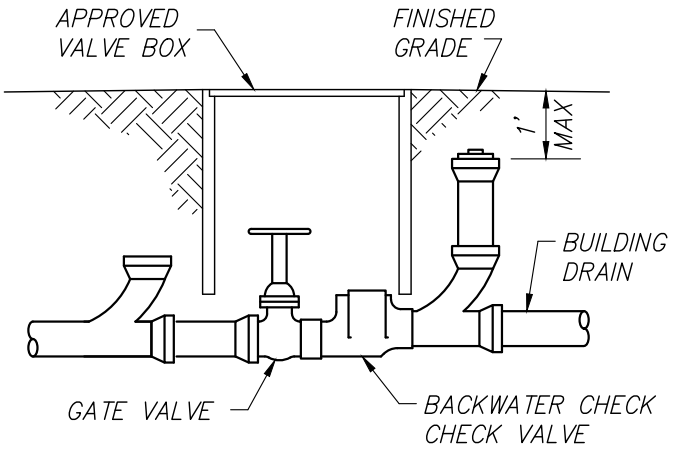

REQUIRED WHEN OVERFLOW SYSTEM CANNOT BE USED WITHOUT POSSIBLE SERIOUS PROPERTY DAMAGE

BACKWATER CHECK VALVE & SHUTOFF SYSTEM

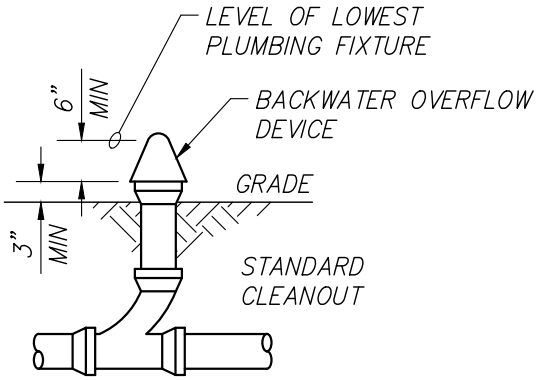

LOCATE WHERE SEWAGE CAN OVERFLOW WITHOUT SERIOUS PROPERTY DAMAGE

OVERFLOW SYSTEM

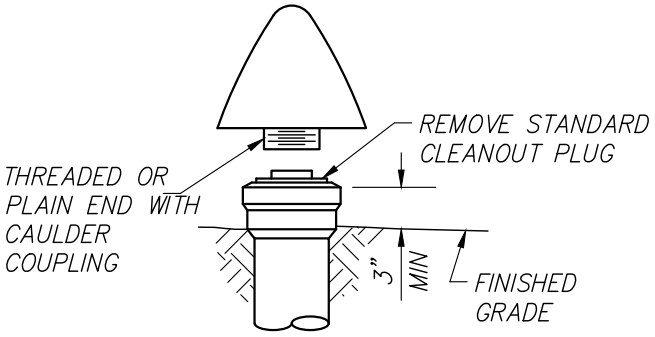

BACKWATER OVERFLOW DEVICE

NOTES:

1. USE BACKWATER OVERFLOW SYSTEM WHEN THE LEVEL OF THE LOWEST PLUMBING FIXTURE IS AT OR BELOW A POINT 18" ABOVE THE LEVEL OF THE NEAREST UPSTREAM SEWER STRUCTURE (MANHOLE OR RODHOLE).
2. CLEANOUT SIZE SHALL BE EQUAL TO HOUSE LATERAL SIZE.

CITY OF LINCOLN
ENGINEERING DEPARTMENT

BACKWATER OVERFLOW SYSTEM AND STANDARD 4" CLEANOUT DETAIL

REVISIONS:	DATES:	APPROVED:
		CITY ENGINEER DATE

SCALE: NONE
DATE: SEPTEMBER 2019
DRAWN BY: C.G.

SS-13

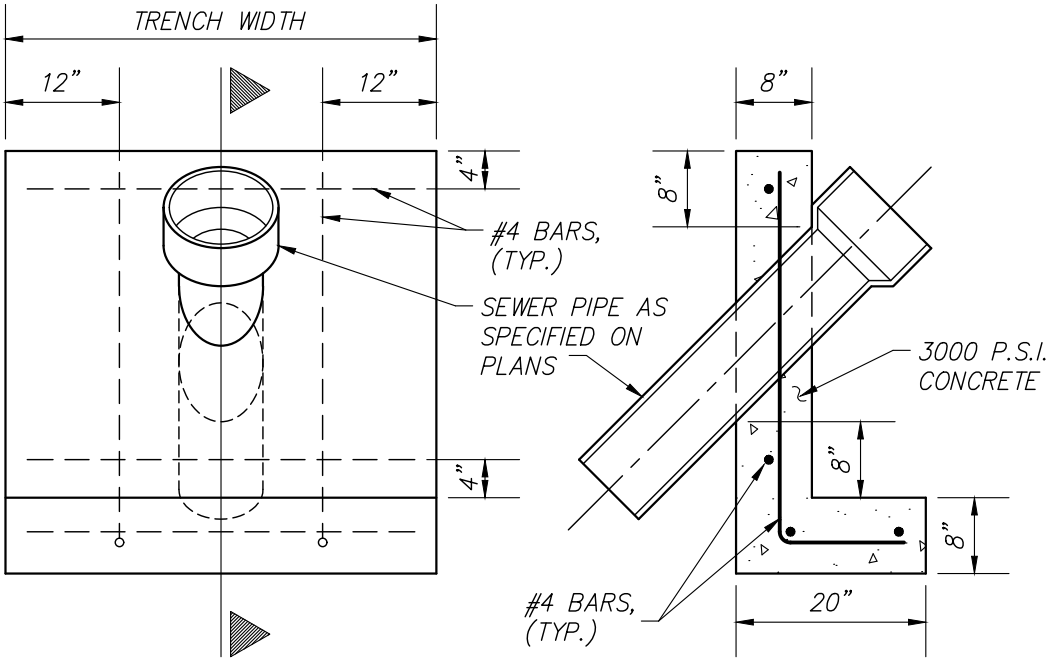

ELEVATION ***SECTION***

NOTES:

1. *USE AS SHOWN ON PLANS OR DIRECTED BY CITY ENGINEER.*
2. *TYPICAL REQUIREMENT ON SLOPES OF > 30%.*

CITY OF LINCOLN
ENGINEERING DEPARTMENT

ANCHOR DETAIL

REVISIONS:	DATES:	APPROVED:
		CITY ENGINEER DATE

SCALE: NONE
DATE: SEPTEMBER 2019
DRAWN BY: C.G.

SS-14

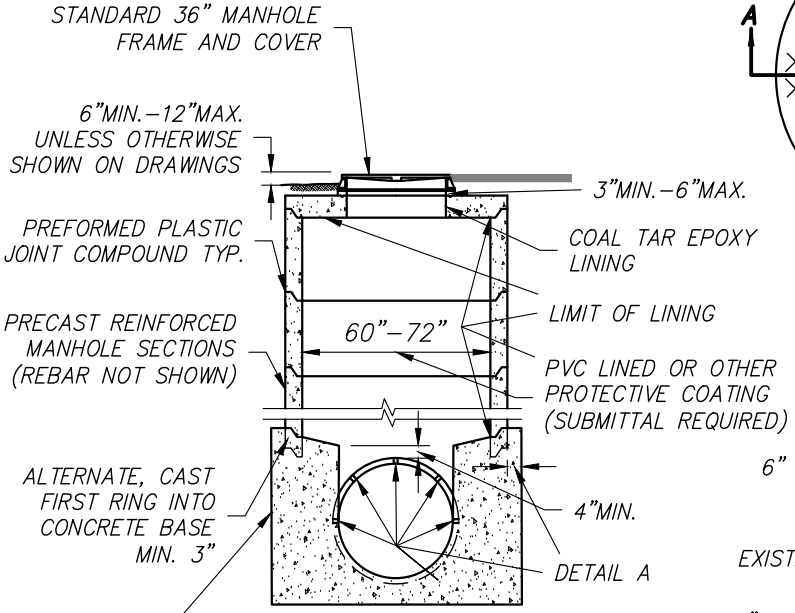

MANHOLE DETAIL (TYPE B)

CONCRETE BASE. POUR AGAINST UNDISTURBED MATERIAL OR FORM. IF FORMS ARE USED, THE VOID BETWEEN THE CONCRETE AND THE UNDISTURBED MATERIAL SHALL BE BACKFILLED WITH 1–1/2" MAX. ROCK TO THE TOP OF THE BASE.

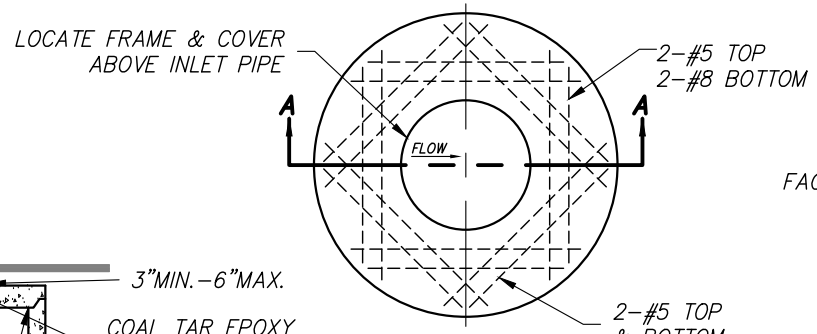

PLAN

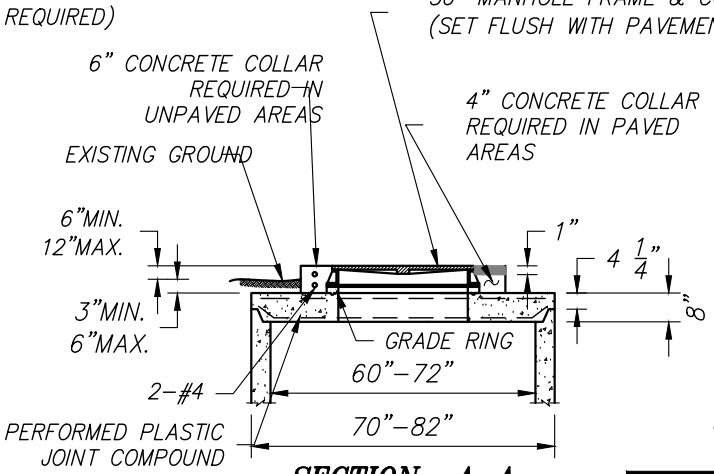

SECTION A–A

INSTALL 5 VCP PLUGS IN RCP AT DOWNSTREAM END OF MANHOLE 12" FROM INSIDE EDGE OF MANHOLE

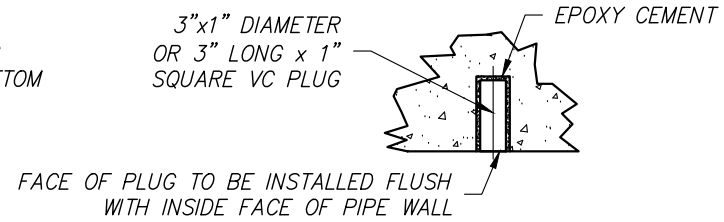

DETAIL A

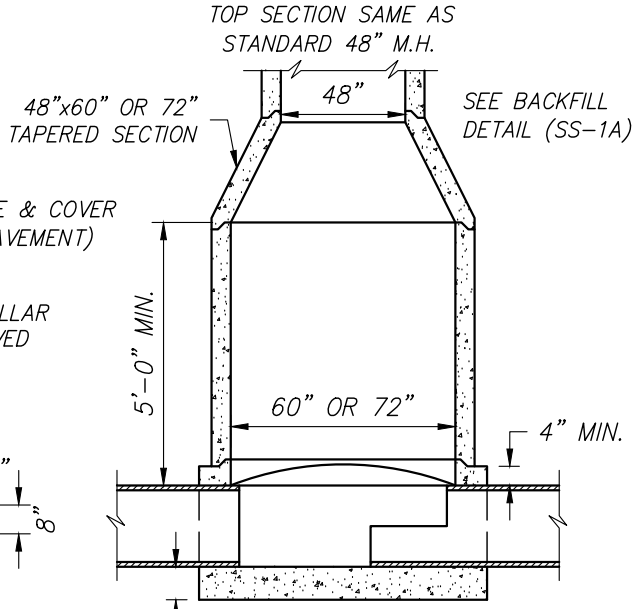

STANDARD MANHOLE
(TYPE A)

NOTES:

1. CLASS A CONCRETE SHALL BE USED FOR MANHOLE BASES.
2. PIPE MAY STOP AT INSIDE FACE OF MANHOLE OR MAY BE CONTINUOUS THRU MANHOLE. IF PIPE LAID CONTINUOUS, TOP HALF SHALL BE BROKEN AWAY AFTER BASE IS POURED.
3. JOINTS FOR THE BARREL SECTION SHALL BE TONGUE AND GROOVE. ALL JOINTS MUST EITHER BE MADE WITH PREFORMED PLASTIC SEALING GASKETS OR BY BUTTERING THE JOINT SPACE WITH MORTAR.
4. CONNECTION OF THE PIPE TO THE MANHOLE MAY BE MADE USING A RESILIENT CONNECTOR CONFORMING TO ASTM STANDARD C923 SUCH AS KOR–N–SEAL, A–LOK, OR EQUAL.
5. 60" MANHOLE FOR PIPE DIAMETER TO 36", 72" MANHOLE FOR PIPE DIAMETER TO 48".
6. SEE STD DET SS–1A FOR BACKFILL REQUIREMENTS.

REVISIONS:	DATES:	APPROVED:
		CITY ENGINEER DATE

CITY OF LINCOLN
ENGINEERING DEPARTMENT

STANDARD
60" & 72" SEWER MANHOLES

SCALE: NONE
DATE: SEPTEMBER 2019
DRAWN BY: C.G.

SS-15

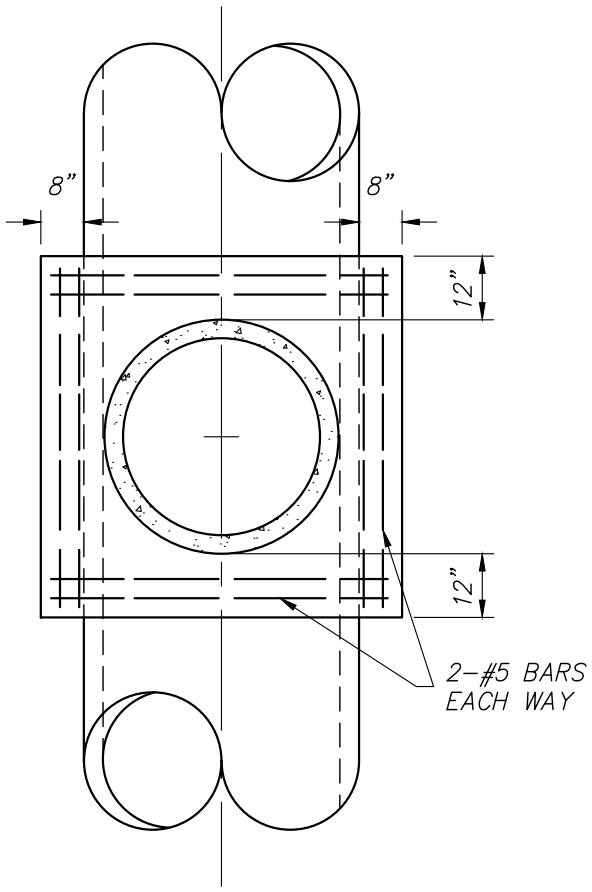

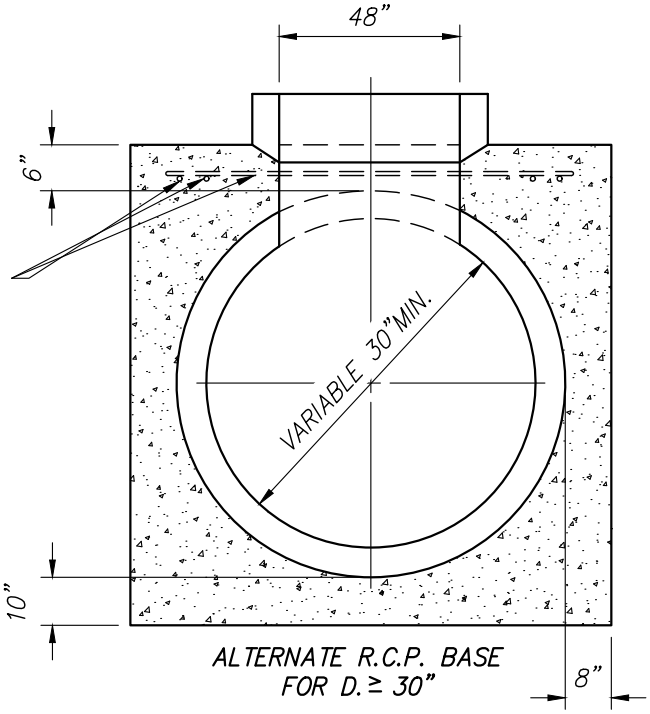

ALTERNATE R.C.P. BASE
FOR D. ≥ 30"

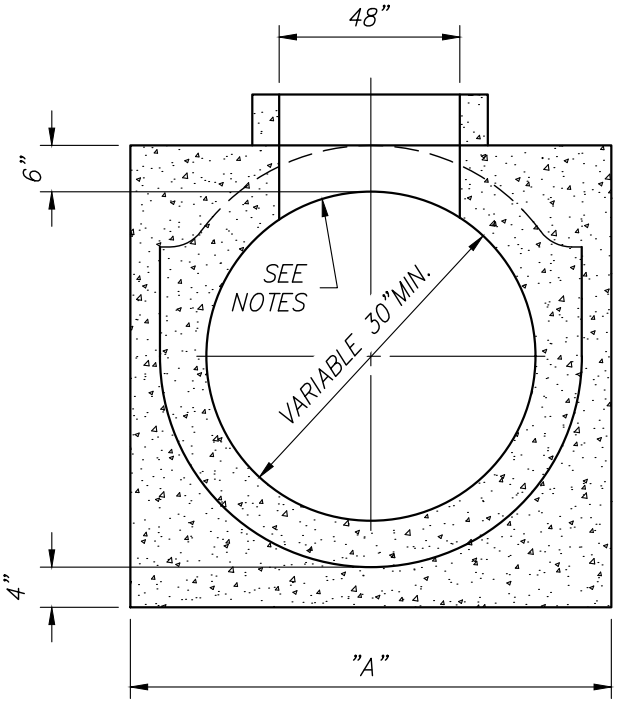

CAST-IN-PLACE PIPE ONLY
(SEE NOTES)

SECTIONS

NOTES:

1. REMOVE CONCRETE IN MANHOLE OPENING AND CONSTRUCT RISER BASE WHILE CONCRETE IS STILL FRESH.

2. PLACE RISER SECTION AFTER CONCRETE HAS SET.

3.

PIPE DIA.	30"	36"	42"	48"	54"
"A"	5'-0"	5'-0"	5'-0"	5'-8"	6'-3"
PIPE DIA.	60"	66"	72"		
"A"	6'-10"	7'-5"	8'-0"		

CITY OF LINCOLN
ENGINEERING DEPARTMENT

SADDLE MANHOLE

REVISIONS:	DATES:	APPROVED:
		CITY ENGINEER DATE

SCALE: NONE
DATE: SEPTEMBER 2019
DRAWN BY: C.G.

SS-16

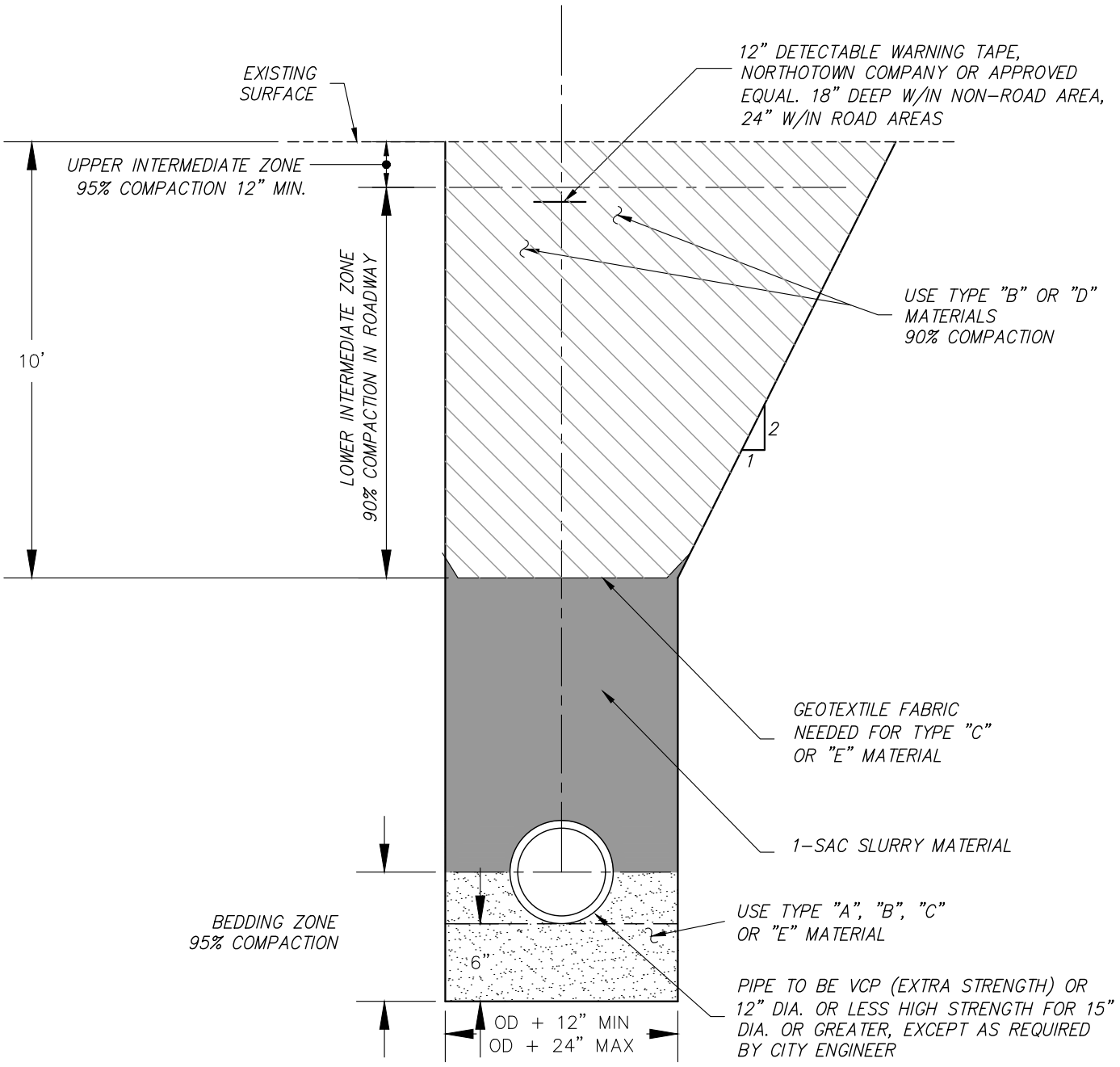

NOTES:

FOR NOTES, BEDDING AND MATERIAL SEE SS-1, SEWER TRENCH DETAIL.

CITY OF LINCOLN
ENGINEERING DEPARTMENT

DEEP SEWER TRENCH DETAIL

REVISIONS:	DATES:	APPROVED:
		CITY ENGINEER DATE

SCALE: NONE
DATE: SEPTEMBER 2019
DRAWN BY: C.G.

SS-17