SECTION 4

DOMESTIC WATER SUPPLY SYSTEM (W)

4-1 General W-1
4-2 Connection to Existing Facilities W-2
A. City Tap W-2
B. Existing Stub (Contractor Personnel) W-3
4-3 Construction Staking W-3
4-4 Trench Work W-4
A. Existing Pavement W-4
B. Water in Trench W-4
C. Unsuitable Trench Bottom W-5
D. Open Trench W-5
E. Steel Trench Plates W-5
F. Temporary W-5
G. Pipe Support W-5
4-5 Pipe Installation W-5
A. Manufacturers Recommendations W-6
B. Pipe Cleanliness W-6
C. Cathodic Protection W-6
D. Placing Pipe W-6
E. Joining Pipe W-6
F. Covering Pipe W-6
G. Tracing Wire W-6
H. Tracing Wire W-6
I. Pipe Protection W-7
J. Polyvinyl Chloride (PVC) Pressure Pipe Installation W-7
K. Ductile Iron Pipe (DIP) W-7
L. Transitions W-8
M. Borings W-8
4-6 Service Installation W-9
A. Service Runs W-9
B. Saddles W-9
C. Service Manifolds W-9
D. Telemetering W-10
E. Backflow Assembly W-10
F. Curb Marking W-10
G. Double Meter Service W-10
4-7 Service Abandonment W-10
4-8 Mainline Abandonment W-10
4-9 Appurtenances Installation W-10
A. Pipe Protection W-10
B. Gate Valves W-10
C. Bolt and Nut Protection W-11
D. Pressure Reducing Station W-11
E. Fire Hydrant Bolts W-11
F. Marking Fire Hydrants W-11
G. Fire Hydrant Paint W-11

H. Dead Lines W-11
I. Insulation W-11
4-10 Concrete Cradles, Arches, & Encasements W-11
4-11 Pipe Backfill QA/Q W-12
A. Performance Based QA/QC (Non-Testable Materials) W-12
B. Design Based QA/QC (Non-Testable Materials) W-13
C. Trench Backfill Material W-13
D. Pipe Zone Backfill W-14
E. Compaction Test Methods W-14
F. Testing Frequencies W-14
G. Marking W-15
H. Marking in Unpaved Areas W-15
4-12 Testing Procedures W-15
A. Pressure Test W-15
B. Chlorine Disinfection W-16
C. Water Quality Testing W-17
D. Tying into the City System W-18
E. Continuity Testing W-18
4-13 Repairing Installed Improvement W-18
A. Pipe Replacement W-18
B. Backfill W-18
C. Pipe Protection W-18
4-14 Punch List Process W-18
4-15 Materials W-18
A. Approved Equal W-18
1. Product W-19
2. Contact W-19
3. Reference W-19
B. Unapproved Materials W-19
C. Water Main W-19
1. PVC Pressure Pipe W-19
2. Ductile Iron Pipe W-19
D. Services W-20
1. Copper Tubing W-20
2. Brass Material W-20
a. Brass Pipe W-20
b. Brass Fittings W-20
c. Brass Fittings for Copper Tubing W-20
3. Corporation Stops W-20
4. Curb Stops W-21
5. Dielectric Tape W-21
6. Service Saddles W-21
E. Appurtenances W-22
1. Air Release Valves W-22
2. Backflow Assembly W-22
3. Blocking for Boxes Assembly W-23
4. Blow Off W-23

5. Fittings W-23
a. PVC Pipe W-23
b. Ductile Iron Pipe W-23
6. Freeze Protection for Backflow Assemblies W-24
7. Gaskets W-24
8. Hydrants W-24
9. Hydrant Bury W-24
10. Hydrant Bury Extensions W-24
11. Hydrant Check Valves W-25
12. Location Stakes W-25
13. Mainline Valve Lock-Out W-25
14. Manhole Frame and Cover W-25
15. Meters W-25
16. Meter Idlers W-25
17. Meter Setters W-25
18. Meter Spud Couplers W-25
19. Nuts and Bolts W-26
20. Nylon Bushings W-26
21. Patching Material W-26
22. Polyethylene Encasement W-26
23. Pressure Regulators W-26
24. Restraints W-27
25. Riser Stock W-27
26. Sampling Stations W-27
27. Sap Seal W-27
28. Service Boxes and Lids W-27
29. Silicone W-27
30. Telemetering Conduit W-27
31. Tracing Wire W-28
32. Tracing Wire Connectors W-28
33. Tracing Wire Mastic Tape Seal W-28
34. Valves W-28
35. Valves Boxes W-28
36. Water Pipe Marking Tape W-28
37. Zinc Caps W-28
4-16 Domestic Water System Details W-29

[THIS PAGE INTENTIONALLY LEFT BLANK]

SECTION 4

DOMESTIC WATER SUPPLY SYSTEM (W)

4-1 **General** – All water pipe, fittings, valves, fire hydrants, blow offs, air release valves and other appurtenances will be installed in strict accord with the approved project improvement plans, these Public Facilities Improvement Standards, the requirements of the American Water Works Association (AWWA), the Caltrans Standard Specifications and Standard Plans, and as recommended by the material manufacturer.

Should conflicts arise between documents, the approved project improvement plans will govern over these Public Facilities Improvement Standards. These Public Facilities Improvement Standards will govern over the AWWA requirements. The AWWA requirements will govern over the Caltrans Standard Specifications. In the event of conflict between applicable documents and/or plans, the most restrictive will prevail.

The manufacturer's guidelines for all materials to be used on the project will be present on the construction site at all times.

Developers and Contractors will comply with all applicable City, County, State, and Federal laws and regulations relating to construction of the improvements as required.

If the City Engineer determines that any work on private or public property constitutes a hazard to the health, safety, or welfare of the public; endangers property; adversely affects the safety, use or stability of adjacent property; an overhead or underground utility, or a public way, watercourse or drainage channel; or could adversely affect the air quality; or the water quality of any water bodies or water courses; the City Engineer may issue a stop work notice to the owner of the property upon which the condition is located, or other person or agent in control of such property. Upon receipt of such stop work notice, the recipient will, within the period specified therein, stop all work, obtain any necessary permits and conform to the requirements identified in the stop work notice. The City Engineer may require the submission of plans or other reports, detailed construction recommendations, studies, or other engineering data prior to and in connection with any corrective or proposed work or activity.

All improvements within the City of Lincoln will be performed by a contractor licensed in accordance with the California Contractors State License Law, Business and Professions Code Section 7000 et seq.

All persons, firms, partnerships, or corporations doing business of any nature in the City of Lincoln will have a current Business License as stated in Chapter 5.04 - License Tax, City of Lincoln Municipal Code. This includes developers, engineers, and contractors.

Refer to the City of Lincoln's Design Criteria & Procedures Manual for design information.

All projects will be in compliance with the State water quality requirements for erosion and sedimentation control at all times.

4-2 **CONNECTION TO EXISTING FACILITIES** – Connection to existing City water facilities may be made only with written approval of the City Engineer.

No less than one working day prior to any scheduled water shutdowns, all materials anticipated to be necessary to complete the work and re-establish water services will be inventoried and inspected in the field by the City Engineer or his designated representative. The only exception to this, will be building materials that are of common variety, readily available, and have a limited life for installation, such as ready mix concrete.

A. City Tap – The City Engineer has the option of having City personnel make the required system tap. Should the City perform the tap, the cost for the work will be on a time and materials basis and reimbursable to the City.

The Contractor will be responsible for these tasks associated with the tap:

1. Coordinating the work requested with the City Engineer and the Water Department. This will include discussions on provisions for materials and equipment required to complete the work and notification to affected residents.

2. Providing an approved traffic control plan and required traffic control, including signage.

3. Providing any necessary lighting if the tap is to be performed at night.

4. Excavating the work area as directed by the City Engineer including providing any necessary sheeting/shoring, backfilling and compacting the excavation(s) in accordance with City standard detail W-1 upon completion of the tap.

5. **Under no circumstances will anyone other than a representative of the City of Lincoln Water Division open or close valves in a City operated system.**

B. Existing Stub (Contractor Personnel) – The Contractor will be responsible for these tasks associated with the connection to an existing stub:

1. All connections will take place in the presence of the City Engineer or designated representative.

2. Connection will take place only after the newly constructed water system has successfully passed all required testing procedures as established in Section 4-12 of these Public Facilities Improvement Standards, and is approved by the City Engineer.

3. **Under no circumstances will anyone other than a representative of the City of Lincoln Water Division open or close valves in a City operated system.**

4. Care will be taken to provide a safe and sanitary connection site.

5. Dewatering of both the new and existing water mains will take place to prevent contamination by trench water.

6. All material used in the tie-in will be new, clean, and swabbed with chlorine in accordance with the latest edition of AWWA C651.

4-3 **CONSTRUCTION STAKING** – Construction staking will be provided by the Developer/Contractor for all water system improvements. Staking will provide the station, the offset, and the cut to the nearest 0.1-foot. Stakes will be provided at a minimum of every 50-feet in tangent sections and every 25-feet in curved sections. Vertical curves will be staked every 10-feet in approved vertical curve sections. The City Engineer will be given two sets of cut-sheets prior to construction.

4-4 **TRENCH WORK** – Earthwork required to construct water facilities will be performed to the lines and grades shown on the approved project improvement plans. At all times the trench and the work area surrounding the trench will be kept in a safe manner to adequately protect the public and the workers. The person designated as the project "competent person" will be onsite during all work activity. The specified trench width will be maintained to a height of one-foot over the top of the pipe for all trench wall geometry cross-sections including: vertical walls, steeped vertical walls, V-walls, and combined vertical-V-walls.

Prior to placing bedding, trench backfill materials, or pipes on the trench bottom subgrade surface, the trench bottom will be: relatively free of loose materials, have a relatively smooth appearance, have a relatively constant grade, and be firm and unyielding.

Refer to Detail W-1 and Section 4-11 of these Public Facilities Improvement Standards Section for additional information on trench materials.

A. **Existing Pavement** – When the trench is in an existing surfaced area, the pavement will be sawed or scored and broken ahead of the trenching operations. The pavement will be cut accurately on neat and parallel lines. Trench restorations will conform to the requirements of Standard Detail H-25.

B. **Water in Trench** - When water is encountered in the trench, the geotechnical engineer will be contacted to provide input to the City Engineer. The trench will be kept dry in a manner approved by the City Engineer until the placement of the approved bedding material, laying and jointing of the pipe, and placement of the shading material has been completed and approved. The City will consider, on a case-by-case basis, the use of conventional, in trench, sump- dewatering methods provided that the trench is backfilled with washed, crushed rock or equivalent to at least a height of 3-feet higher than the local ground water table or perched water whichever is at a higher elevation. The crushed rock may require wrapping with a geotextile filter fabric depending upon the expected ground water flow velocities. Installation of ground water monitoring wells can be used to determine the elevation of the water table and/or perched ground water.

   The City requires a dewatering system be designed and implemented in all areas where trenches will be excavated and native backfill will be placed below the local ground water table and/or perched ground water. Installation of ground water monitoring wells can be used to determine the elevation of the water table and/or perched ground water. The dewatering system may include, but not be limited to: driven well point screens and vacuum extraction systems, drilled and installed screened wells with submersible pumps or vacuum extraction systems, or other dewatering methods. Use of in trench sumps will not be allowed as the sole dewatering method. The owner's/developer's geotechnical consultant should develop a dewatering work plan for review and approval by the City prior to implementation.

   The manner employed to dispose of water pumped from an excavation will be subject to the approval of the City Engineer and will conform to all water pollution constraints of the City and other agencies. Ground water pumped from the trench will be disposed of in a manner to not cause injury to public or private property, or to constitute a nuisance or menace to the public.

C. **Unsuitable Trench Bottom –** If the bottom of the trench is soft, yielding, or otherwise unsuitable as a foundation for the pipe in the opinion of the geotechnical engineer, or City Engineer, the unsuitable material will be removed to the depth necessary to provide a stable and satisfactory foundation. Three-quarter inch crushed rock will be placed in the trench to provide a stable foundation. The rock is in addition to the required pipe bedding used in the pipe zone. All rock will be wrapped with geotextile fabric (see Section 3-6 , Type “C” material).

D. **Open Trench –** The trench will be in a safe condition at all times. In roadway areas and locations accessible to the public, trenches will be excavated only as far in advance of pipe laying as can be backfilled in the same day. In addition, the maximum total length of open trench should be no more than 300-feet ahead of the pipe laying operation, or 200-feet behind the pipe laying operation. A trench in an existing roadway that is not to be regraded is defined as "open" until backfilled to subgrade or the original ground line.

E. **Steel Trench Plates –** Steel trench plates will not be used over open trench areas without the approval of the City Engineer. All steel plates will be adequately restrained to eliminate shifting. Trench plates do not eliminate the need for shoring when required. Temporary asphaltic plant mix ("cut-back") at least one-foot in width will be used for a transition on each edge of the plate. "Rough Road" or "Bump" signs will be installed 200-feet on each side before the steel plate. The sign will only be mounted to an operable, lighted barricade for a maximum of 24-hours. The sign will be mounted to a 4-inch x 4-inch post if the placement exceeds 24- hours.

F. **Temporary Surfacing –** In roadway areas, a temporary asphalt plant mix "cut-back" surface not less than 2-inches in thickness will be placed immediately after the top backfill has been completed and compacted. This temporary surface will be maintained at a level surface until removal. The temporary surfacing material will be removed just prior to placing the permanent surface material.

G. **Pipe Support** – Bedding will provide uniform and continuous support along the barrel of the pipe. Bell holes shall be excavated per manufacturer’s recommendations. The minimum depth of bedding material will be provided under the bell. Care shall be taken to ensure that the bell hole is no larger than necessary to accomplish proper joint assembly. Blocking of the pipe is not permitted.

4-5 **PIPE INSTALLATION** – Water pipe will be installed in accordance with these provisions:

A. **Manufacturers Recommendations** – All installations will follow manufacturer's recommendations unless otherwise noted on the approved plans. The manufacturer's installation guide will be on the job site at all times.

B. **Pipe Cleanliness** – The Contractor will keep the pipe interior free from foreign materials and in a clean and sanitary condition until acceptance by the City. At times when pipe laying is not in progress, the open pipe end will be sealed with a tight cap or plug to prevent foreign matter from entering the pipe. Plywood, polyethylene film or cardboard is unacceptable. These provisions will apply to the lunch-hour as well as overnight.

C. **Cathodic Protection** - Cathodic protection will be installed as shown on the project plans. Cathodic test station locations will be marked with "CTS" in 2-inch letters in the curb.

D. **Placing Pipe** - Care will be taken when lowering pipe into the trench to protect the pipe from damage. Chains are not permitted. The pipe will be laid carefully to the lines and grades shown without grade breaks, unless designed with such, or to minimum depths shown on the approved plans. If field conditions exist such that the pipe may not be laid to the specified grade, the approved project improvement plans will require revisions prior to proceeding with construction.

E. **Joining Pipe** - Pipe sections will be correctly jointed to form a smooth flowline. Care will be taken in placing the pipe and making field joints.

F. **Covering Pipe** - Improvements installed and covered without proper inspection will be exposed and inspected as required by the City Engineer.

G. **Pipe Restraints and Fittings** - Pipes will be mechanically restrained to the length specified in the approved plans, using materials specified herein. Thrust blocks and restraints will be used on all fittings 45 degrees and greater. Fittings 22.5 degrees and less will require restraint joints only, per EBAA specs or equal. Fitting sections will be mechanical and/or flanged fittings with MEGALUG® (EBAA) or equal. DIP pipe and straight pipe sections may use grip rings/gaskets. All fittings and appurtenances will maintain a minimum of 18-feet of restrained pipe into the fitting from all directions or as required by the manufacturer's manual and the approved project improvement plans.

H. **Tracing Wire** - A continuous No. 10 copper insulated tracing wire will be attached to mains, service lines and appurtenances per the Standard Details and these provisions:

1. Tracing wire will be continuous between main line valve boxes and fire hydrants. It shall be attached to the top of the pipe with 10-mil vinyl tape every 5 feet.

2. Tracing wires through valve boxes will be placed outside of riser, but inside the box.

3. Tracing wire in manholes and vaults will be attached inside the facility within one foot of the rim.

4. Wire splices will be located above ground and inside of valve boxes and made per Standard Detail W-9.

I. **Pipe Protection** - All underground metal (ductile iron, valves, fittings, copper, brass, etc.) Will be wrapped in 8-mil minimum thickness polyethylene encasement.

J. **Polyvinyl Chloride (PVC) Pressure Pipe Installation** - PVC will be installed in accordance with the AWWA Manual M23, AWWA C907, and the manufacturer's recommendations, except as otherwise provided herein:

1. PVC Pipe will have been manufactured within an 18-month period prior to installation. All pipe to be made in U.S.A.

2. Pipe and gaskets will be kept clean and protected against sunlight and heat damage.

3. Pipe showing signs of physical damage or excessive ultraviolet exposure will be rejected and will be immediately removed from the job site.

4. The pipe will be installed with the manufacturing label showing on the top.

5. The reference mark or stab line on the spigot end must be flush with the bell end and visible for inspection.

6. The beveled end of the pipe will be cut off before placement into a mechanical joint.

K. **Ductile Iron Pipe (DIP) –** DIP will be installed in accordance with the standards for "Installation of Ductile Iron Water Mains and Their Appurtenances" (ANSI/AWWA C600) and the manufacturer's recommendations, and as provided herein:

1. All DIP will be polyethylene encased in accordance with these Public Facilities Improvement Standards and the standard for "Polyethylene Encasement for Ductile-Iron Piping for Water and Other Liquids" (ANSI/AWWA C105/A21.5). Polyethylene encased pipe will be bedded and backfilled with Type A material 12-inches above the crown of pipe.

2. At the direction of the City, the Contractor will repair damages to the polyethylene encasement as described within ANSI/AWWA C105/A21.5 or will replace all damaged polyethylene film sections.

3. DIP cuts will be coated with an acceptable bituminous material.

L. **Transitions -** Transitions between DIP and PVC will be made by using a PVC pipe spigot inserted into a DIP bell by cutting off the PVC bevel on the spigot, and leaving no more than a 1/2-inch taper, or by using a DIP repair sleeve.

M. **Borings** - The equipment, method and sequence of operation and conductor pipe grades will be approved by City Engineer.

1. A minimum of 48-hours' notice will be given prior to the start of work, without exception.

2. Excavation for the boring operation will be the minimum necessary to satisfactorily complete the work. Bracing and shoring will be adequate to protect workers and any adjacent structure or roadbed.

3. The conductor will closely follow the boring operation. The bored hole will not be more than 0.10-foot larger in diameter than the outside diameter of the conductor. Guide rails will be accurately set to line and grade to ensure installation of the conductor within allowable limits. The conductor diameter will be sufficient to allow adjustment of line and grade of the conducted pipe to meet allowable tolerances and to allow sand to be placed between the conductor and the conducted pipe.

4. Conducted pipe will be supported by a minimum of three sets of synthetic skids per stick of pipe, or as required by City Engineer. Pipe sections will be joined outside of the conductor. The skids and casing entrance will be lubricated prior to sliding the conducted pipe into place. The height of the skids may be adjusted to meet specified grades.

5. The space between the conducted pipe and conductor will be completely filled with clean, dry silica sand, blown into place. The method of placing sand in the void will be approved by City Engineer. Both ends of the casing will be plugged with non-shrink grout a minimum of 12-inches into the casing.

6. Whenever, in the opinion of the Developer's design or geotechnical engineer, the nature of the soil indicates the likelihood of ground loss which would result in a greater space between the outer surface of the conductor than allowed, the Contractor will take immediate steps to prevent such occurrences by installing a jacking head extending at least 18-inches from the leading edge of the conductor.

The jacking head will cover the upper two-thirds of the conductor and project not more than 1/2-inch beyond the conductor outer surface. Excavation will not be made in advance of the jacking head. Voids greater than allowable will be filled with sand, soil cement, grout, or as approved by City Engineer. Where voids are suspected, the design or geotechnical engineer may direct the contractor to drill the conductor, to pressure inject grout to refusal and repair the drilled hole. Grouting pressure will not exceed 50- pounds per square inch at the nozzle.

4-6 **SERVICE INSTALLATION** – Water services will be installed in accordance with manufacturer's recommendations, the Improvement Standard Details and with these provisions:

A. Service Runs – Services will be continuous from the main line to the service box. Bends in copper tubing will be made in a manner that does not crimp or flatten the tubing.

B. Saddles - Taps, service saddles, tees, joints, and fittings attached to mains will be separated by a minimum of 24-inches. Service saddles will be wrapped in 8-mil minimum thickness polyethylene and backfilled with Type "A" backfill, or other approved material by the City Engineer. Service saddles will be installed with zinc caps on all bolts, per Standard Detail W-3.

C. Service Manifolds – Service manifolds will be constructed per the following criteria:

1. Where a service line to a manifold is extended a distance greater than 18-feet, a construction jumper will be installed per Standard Detail W-19 of the City of Lincoln Standards. The new service line and manifold will be tested in accordance with Section 4-12 of these Improvement Standards.

Where a service line is extended a distance less than 18-feet, the extension will be cleaned, swabbed with chlorine and flushed per the latest edition of AWWA C651 in the presence of the City Engineer. The new service line and manifold will be pressure tested in accordance with Section 4-12 of these Improvement Standards.

In both cases, the installation will be fully restrained by an approved restraint system, starting at the main and as required by the approved project improvement plans.

2. Services outside of paved sections will be ductile iron.

3. No water will be drawn through a service prior to installation of the water meter and testing of the backflow assembly. 72-hour notification will be made to the City Engineer prior to testing of the backflow assembly without exception.

D. **Telemetering –** Telemetering conduit will be installed in accordance with these Improvement Standards, the Uniform Electric Code and as required by the Director of Public Works/City Engineer.

E. **Backflow Assembly** - A backflow assembly will be required for construction and sales trailers having a landscape irrigation system or a septic holding tank. Backflow assemblies will be covered with a freeze protection insulated bag per these Improvement Standards.

F. **Curb Marking** - The curb in front of residential water services will be stamped with a 'W' (2-inch in size).

G. **Double Meter Service** - Double meter service will be installed with 1 1/2-inch run as shown on detail W-4A and the approved plans.

4-7 **SERVICE ABANDONMENT** – All water services requiring abandonment will be disconnected from the main line by closing the corporation stop and placing a concrete cap over the corporation stop unless otherwise approved by the City. In some cases, as directed by the City Engineer, service saddles will be removed and the main repaired with a repair band.

4-8 **MAINLINE ABANDONMENT** – Main lines to be abandoned will be removed or filled with concrete slurry.

4-9 **APPURTENANCES INSTALLATION** – All appurtenances, including fire protection, blow-offs, sample stations, air release valves, backflow/cross connection devices, and fire hydrants will be installed in accordance with manufacturer's recommendations, these Improvement Standards and these provisions:

A. **Pipe Protection** – All valves, fittings, DIP, copper and underground brass will be wrapped in an 8-mil minimum thickness polyethylene encasement. Damaged or scratched surfaces on fusion bonded epoxy coated valves and appurtenances will be repaired with an epoxy kit per manufacturer's recommendations and to the satisfaction of the inspector prior to wrapping, without exception. Nuts and threads on valves will face away from concrete thrust blocks.

B. **Gate Valves** - Gate valves will be centered in a one-piece riser stock. On valves where the operating nut exceeds 36-inches in depth from final grade,

an operator nut extension 24 inches minimum in length will be installed.. (See Standard Detail W-9).

C. **Bolt and Nut Protection** -"Sap Seal" caps will be placed on all buried nuts and bolts. Longer bolts (5-inches minimum) may be required to accommodate the caps. In situations where a longer bolt cannot be installed due to the configuration of the appurtenance, and with the City Engineer approval, the bolt will be coated with an "anti-seize" product prior to installation. After the nut has been tightened into place, the nut and bolt will be completely coated with an acceptable bituminous coating. Additionally, where sap seal caps cannot be used, all buried nuts and bolts will be coated with a bituminous coating. This includes exposed bolts found on a manufactured appurtenance (i.e., valve bonnets, etc.)

D. **Pressure Reducing Station** - The station will be readily accessible by maintenance vehicles during all weather conditions. Valves will be fusion bonded epoxy coated per AWWA C116 and bolts will be grade 316 stainless steel.

E. **Fire Hydrant Bolts** - Break away bolts will be used in connecting the fire hydrant to the hydrant bury. Bolts will be installed nut side up with the bolts filled and covered with silicone caulking. Clearance will be made for removal of all bolts.

F. **Marking Fire Hydrants** - Fire hydrants will be marked with a blue reflector placed 1-foot off of street centerline on the fire hydrant side of the street. Fire hydrants located at intersections will be marked on both streets.

G. **Fire Hydrant Paint** - Fire hydrants will be painted with two coats safety yellow. Paint will not cover any of the threads on the outlet. When used as blow-offs the top 2-inches will be painted white and marked with an "X" with black enamel paint. Private hydrants will be painted white.

H. **Dead Lines** - Dead end lines, permanent and temporary, will have a blow off constructed per Standard Detail W-7 and W-7A.

I. **Insulation** - Insulating kits will be installed at transitions between ferrous and nonferrous metals per these Improvement Standards.

4-10 **CONCRETE CRADLES, ARCHES & ENCASEMENTS** – Concrete cradles, arches and encasements will conform to Standard Detail SS-9, and these conditions:

A. The pipe will be placed in proper position on temporary supports consisting of concrete block or bricks. When necessary, the pipe will be rigidly anchored or weighted to prevent flotation when the concrete is placed.

B. Concrete for cradles, arches or encasements will be placed uniformly along the pipe. Concrete placed beneath the pipe will be sufficiently workable to fill the voids without excessive vibration. The concrete will be allowed to cure and remain undisturbed for a minimum of 24-hours prior to backfill and compaction of the trench.

C. Water will not be permitted to enter, seep or run onto the concrete while curing.

4-11 **PIPE BACKFILL QA/QC** – Pipe zone backfill will conform to Standard Details W-1 and W-2 and these Improvement standards. Construction quality assurance and quality control (QA/QC) of all utility trench backfill will be performed by the owner's/developer's geotechnical engineering consultant. A performance based QA/QC specification will be developed and used for placement and compaction of all non-testable trench backfill materials. A design based QA/QC specification will be used for placement and compaction of all testable trench backfill material.

A. Performance Based QA/QC (Non-Testable Materials) - Non-testable trench backfill materials generally consist of locally derived mixtures of cobbles with a sandy matrix and/or breccia (volcanic rock) with a sandy matrix. These non-testable backfill materials should have a maximum particle size of 6-inches (greatest dimension). Use of non-testable trench backfill materials will be approved by the City on a case-by-case basis.

A performance-based specification criteria will be used to evaluate the suitability of placed and compacted non-testable trench backfill materials. The property owner's/developer's geotechnical engineering consultant must prepare a work plan that describes a proposed site-specific performance based specification for review and approval by the City prior to commencement of work. The work plan must include, but not be limited to:

1. Maximum loose lift (layer thickness) prior to compaction.

2. Moisture content range to be achieved prior to compaction

3. Specified compaction equipment to be used.

4. Minimum number of passes and coverage of specified compaction equipment.

B. **Design Based QA/QC (Testable Materials) -** Testable trench backfill materials generally consist of on-site native earth materials and imported earth materials that can be classified as soils according to the American Society for Testing and Materials (ASTM) Unified Soils Classification System guideline procedures (ASTM D2487 and D2488). These soil materials can be easily tested to determine if they meet the project design based QA/QC specifications for percent relative compaction by the following ASTM test methods:

ASTM D1556, Standard test method for in place density and unit weight of soil and soil-rock mixtures by the Sand-Cone Method

ASTM D2922, Standard test method for in place density and unit weight of soil and soil-rock mixtures by the Willow Depth Nuclear Method.

ASTM D3017, Standard test method for in place water content of soils and soil-rock mixtures by Willow Depth Nuclear Method.

C. **Trench Backfill Material -** The City requires designed based construction QA/QC testing and observation services to be performed by the owner's/developer's geotechnical engineering consultant to document that trench backfills meet or exceed the minimum material properties and minimum relative percent compaction requirements of the City specifications. Trench backfill material types, and relative percent compaction for water mains are presented below.

1. **Type "A" Material:** 3/8 inch minus imported screened sand with a minimum sand equivalent of 50 per CTM 217. All gradations are to be approved by the City prior to construction.

2. **Type "B" Material:** Class 2 Aggregate Base Rock per Caltrans Standard Specifications.

3. **Type "D" Material:** Crushed rock or soil-rock mixture (native) not to exceed 3 inches. Up to a 6 inch minus material may be used with special considerations and conditions approved by the City and Geotechnical Engineer. The material will be completely free of wood, roots, or other deleterious materials. Material not to be used within 24-inches of top of pipe without City Engineer's approval. Compaction will be by vibratory equipment or other approved devices. The City may require that the material be screened. A layer of geotextile fabric will be placed between the pipes and intermediate backfill zone. Material will only be used with geotechnical engineer's recommendation and with approval of the City Engineer.

D. **Pipe Zone Backfill -** Extreme care will be taken when consolidating the backfill around the pipe zone. For pipe 12-inches in diameter and smaller, no more than one-half of the pipe will be covered prior to shovel slicing (forcing rock backfill into the lower quadrants of the pipe). For pipe greater than 12-inches in diameter, no more than 6-inches will be covered prior to shovel slicing. Sufficient care will be taken to prevent movement of the pipe during shovel slicing. Shovel slicing will be witnessed by the City Engineer prior to shading the pipe. Proposed bedding, haunching and initial backfill (pipe backfill) materials will be approved by soils engineer and submitted to the Engineer with sieve analysis and sand equivalent test results. California Test Methods will include 216, 217, 301, and 302. Compaction equipment will not make direct contact with the pipe.

E. **Compaction Test Methods** - The percent relative compaction of all testable trench backfill soil will be determined by a combination of the following ASTM test methods:

ASTM D1557, Modified Proctor Compaction Curve.

ASTM D1556, In-place Soil Density by the Sand-Cone Method.

ASTM D2216, Soil Moisture Content By the Convection Oven Method.

ASTM D2922, In-place Soil Density by Nuclear Method.

ASTM D3017, In-place Soil Moisture Content by Nuclear Method.

ASTM D4643, Soil Moisture Content By The Microwave Oven Method.

ASTM D4959, Soil Moisture Content By The Direct Heating Method.

F. **Testing Frequencies** - All field testable trench backfill materials, that are classified according to the Unified Soils Classification System using ASTM D2487 and D2488 procedures as CL, ML, SC, SM, GC, GM, GP and GW by ASTM tests D422 (Particle Size Gradation) and D4318 (Atterberg Plasticity Indices), should be tested for percent relative compaction using a minimum frequency of one compaction test per maximum 12-inch-thick loose lift (layer) per 250-linear-feet of trench length or material change, whichever condition requires the greatest number of tests. Generally, minimum requirements include 12-inch loose lifts; moisture conditioned to at or above optimum moisture and compacted with 8 to 10 passes by a sheepsfoot wheel mounted on a Cat 225 or equivalent. In special circumstances the City may require other compaction equipment combined with thinner lifts.

All field testable trench backfill materials, that are classified according to the Unified Soils Classification System using ASTM D2487 and D2488

procedures as CL, CH, ML and MH by ASTM tests D422 (Particle Size Gradation) and D4318 (Atterberg Plasticity Indices), should be tested for percent relative compaction using a minimum frequency of one compaction test per maximum 12-inch-thick loose lift (layer) per 100-linear-feet of trench length or material change, which ever condition requires the greatest number of tests.

G. Marking - A 12-inch wide, blue plastic non-detectable water pipe marking tape, marked "Buried Water Main Below", will be placed in all mainline trenches, 18-inches deep within non-road areas and 24-inches deep within road areas per Standard Detail W-1. Where a water main and reclaimed water main intersect, the plastic marking tape will also be attached to the top of the pipe with nylon tie-wrap banded around the warning tape and the pipe every five feet on center. The warning tape will extend to the nearest valves located on each side of said intersection.

H. Marking in Unpaved Areas - Mains in unpaved areas will be marked every 150-lineal feet with a blue composite utility marker having a decal stating: "Caution Buried Water Pipeline". Appurtenances (valves, ARV's, test stations, etc.) and angle points will also be marked. Mains in landscaped areas will be delineated with a brass marker set in an 8-inch concrete cylinder. The brass marker will state “City of Lincoln Water Main”.

4-12 **TESTING PROCEDURES** – Testing of the water system may proceed only after joint utility crossings are completed, the sewer mains and laterals have passed pressure test and TV inspection, the reclaimed water system has passed testing and subgrade elevations have been met. Testing after all meter setters are in place may be subject to additional pressure tests at the discretion of the City Engineer. Water system will be re-tested after completion of any cement/lime/fly ash treated subgrade.

A. Pressure Test in accordance with AWWA standards (C605 for PVC, C600 for DIP) and the following:

1. Contractor will verify with the City Engineer that all system valves are open prior to testing.

2. The use of test plates will be approved by the City Engineer on a case-by-case basis.

3. The City Engineer will be present during the duration of the test.

4. Tests shall be performed only after the pipeline has been properly filled, flushed, and purged of air. No more than 0.5% of the line volume in additional water will be required to raise the test pressure from 0 to 150-psi.

5. The hydrostatic test pressure shall not be less than 150 psi or 1.5 the maximum anticipated sustained working pressure at the highest point along the test section unless the pressure exceeds the design pressure limit for any pipe, thrust restraint, valve, fitting, or other appurtenance of the test section, whichever is greater. In no case shall the test pressure exceed the design pressure limit for any pipe, thrust restraint, valve, fitting, or other appurtenance of the test section.

6. The test gauge will be liquid filled and capable of testing up to 300-psi.

7. No detectable leakage is allowed. Contractor will repair all leaks discovered during pressure test.

B. Chlorine Disinfection - Chlorine disinfection will comply with the latest edition of the American Water Works Association Standard for Disinfection Water Mains (C651) and these improvement standards:

1. Contractor will verify with the City Engineer that all system valves are open prior to testing.

2. A mandatory 72-hour notice is required prior to any disinfection procedures.

3. Chlorine tablets may not be placed in pipes. They will be retained in a device that prohibits their entry into the pipe.

4. Prior to chlorinating, pre-flush water mains and services

5. Chlorine will be drawn through all mains, hydrant runs and services. The City Engineer will verify that a minimum chlorine residual of 50-parts per million (ppm) has been achieved.

6. After a 24-hour holding period, the City Engineer will verify that a minimum chlorine content of 25-ppm remains in the system.

7. Upon approval by the City Engineer, the water system will be flushed to remove concentrated chlorine. Flushing will be continued until the remaining water has a chlorine residual below 1-ppm. Chlorinated water will be neutralized to less than or equal to 1-ppm chlorine residual **or** less than or equal to the public system chlorine content prior to discharge. Discharge location and neutralization methods will be coordinated with and approved by the City Engineer. A 72-hour notification to the City Engineer required prior to any discharge of chlorinated water.

8. At City Engineer's discretion, chlorinated water resulting from flushing newly installed water lines may be discharged into the City's sewer system. Permission to discharge chlorinated water into the sewer system will be granted by the City Engineer, on a case-by-case basis.

   Prior to discharging into the sewer system, the Contractor will sign a form authorizing DPW to bill for the amount of water discharged into the system. At the end of each flushing exercise, and prior to tying into the City water system, the City Engineer will prepare a bill for water usage based on the meter reading. This bill must be paid before the project is signed off by the City.

   Chlorinated water will not be disposed of into environmentally sensitive areas (i.e., under oak trees, vernal pools, manmade or natural streams, drainage systems, etc.). No water may be disposed of under oak trees during any time of the year.

   a. Water used for the purpose of flushing will be metered.

   b. Discharge into the sewer system will be done in such a manner as to avoid surcharging the sewer system.

   c. No discharge into the sewer system will be permitted on rainy days.

   d. No discharge will be permitted upstream of a small lift station.

   e. An approved air gap will be maintained at all times. Air gap distances will be calculated as 2.5 times the pipe diameter. In no case will the air gap be less than 1-inch.

C. **Water Quality Testing** - Chlorine disinfection will comply with the American Water Works Association Standard for Disinfection Water Mains (C651-92) and these improvement standards:

   Contractor is responsible for coordination of testing which will be performed by a City approved lab. Samples will be taken at locations approved by the City. Prior to collecting water quality samples and following chlorine disinfection, the water system will be held at City line pressure for a minimum of 48-hours. The City Engineer must be notified at least 72-hours in advance of testing, without exception. Water may not be drawn during this time period. After the 48-hour holding period has elapsed, water quality samples will be collected by the approved lab. The laboratory will complete total coliform and total plate count tests. The Contractor shall allow a minimum of 24 hours for the City Engineer/DPW to review and approve the laboratory test results. Actions allowed based on test results are:

BACTERIOLOGICAL TEST		
Coliform Present?	**Plate Count Results**	**Action Required**
No	Less than 1,000	Connect to City System
No	Greater than 1,000, but less than 1,250	Flush water system and re-test
Yes	Greater than 1,250	Flush and re-chlorinate water system and re-test

D. **Tying into the City System –** The water system may be tied into the City system upon completing and passing all the testing procedures. Tie-ins will be conducted as specified in Section 4-2 of these Improvement Standards. After the tie-in has been made, the Contractor will flush the segment tied-in, to the approval of the City Engineer.

E. **Continuity Testing –** Contractor will test continuity of the tracing wire with standard locating equipment in the presence of the City Engineer or his/her designated representative. Discontinuity in the tracing wire will be repaired. It is recommended that the Contractor perform continuity testing after subgrade is made, but before asphalt is placed. Final continuity testing will take place after asphalt is placed and all valve boxes are raised.

4-13 **REPAIRING INSTALLED IMPROVEMENTS** – All PVC and DIP water mains will be repaired by these procedures:

A. **Pipe Replacement** - Damaged or failed pipe sections will be removed and replaced with new pipe in the presence of the City Engineer. Replacement can be accomplished by the use of City approved ductile iron mechanical joint repair sleeves. Pipe restraints and thrust blocks will be required on all bends.

B. **Backfill** - After the repair has been completed, the excavation will be backfilled and compacted to grade as specified. The repairs will then be re-tested per these Improvement Standards.

C. **Pipe Protection** - At the direction of the City, the Contractor will repair damage to the polyethylene encasement as described within ANSI/AWWA C105/A21.5 or will replace all damaged polyethylene film sections.

4-14 **PUNCH LIST PROCESS** – When the Contractor has all improvements substantially completed, a punch list of final outstanding items may be requested.

4-15 **MATERIALS** – Materials to be used in domestic water systems will conform to these Improvement Standards:

A. **Approved Equal** - The words "approved equal" will mean any material deemed by the City to be acceptable for use within the City's water system as compared to products of specified manufacturers. Specifications for all

materials (submittals) to be used on the project will be submitted to the City prior to start of construction. The submittal will include a letter with:

1. **Product** - A description of the product and the appropriate materials specification section number, including description of use.

2. **Contact** - The name and telephone number of the contact person for the proposed product.

3. **Reference** - A list of other agencies that are using the proposed product (including names and telephone numbers).

Address the letter to the City of Lincoln Engineering Department, 600 Sixth Street, Lincoln, CA 95648 ATTN: City Engineer. City staff may request a sample of the product for review.

B. **Unapproved Materials** - Materials not approved for use on the project will be removed from the site within 24-hours if requested by the City Engineer.

C. **Water Main** - Unless noted on the approved plans, all water mains will be either Polyvinyl Chloride Pressure Pipe (PVC) or Ductile Iron Pipe (DIP).

1. **PVC Pressure Pipe** - PVC Pressure Pipe will be manufactured to a minimum Class 200 DR14 rating and will conform to the "Standard for Polyvinyl Chloride (PVC) Pressure Pipe, 6-inches through 12 inches, for Water" (AWWA C900), and ASTM D 1784 will also include:

   a. PVC Pressure Pipe will be blue or white in color and will have been manufactured within 18-months of installation. The pipe will be manufacturer date coded and the City provided the manufacturer's coding for translation. Sun damaged pipe may be rejected at the City Engineer's discretion.

   b. Rubber rings will conform to the "Standard Specifications for Elastomeric Seals (Gaskets) for Joining Plastic Pipe" (ASTM F477).

   c. Approved PVC Pressure Pipe manufacturers include: Certa Lok, Diamond Plastics Corporation, JM Eagle, Vinyl Tech, or approved equals. (All pipe will be made in USA).

2. **Ductile Iron Pipe** - DIP will be Class 350 and manufactured to conform to the standards ANSI/AWWA C150/21.50 thickness design of ductile-iron pipe and to "Ductile Iron Pipe Centrifugal Cast in Metal Molds or Sand-Lined Molds for Water and Other Liquids" (ANSI/AWWA C151/A21.51) and will be made in USA and will also include:

a. DIP will be cement mortar lined in accordance with the standard for "Cement Mortar Lining for Ductile Iron Pipe and Fittings for Water" (ANSI/AWWA C-104/A21.4).

b. Approved DIP manufacturers include: Pacific States, Tyler, US Pipe, or approved equals. (All pipe will be made in USA)

D. Services

1. **Copper Tubing** - Copper tubing will be seamless, annealed copper tube and will conform to ASTM B88 "Standard Specification for Seamless Copper Water Tube" and will be Type K. Copper will be grade UNS-C122200. For 1-inch diameter, use Type K Rolled Soft Copper. For diameters ranging from 1.25-inch to 2-inch, use Type K Soft 20-foot Sticks. Approved tubing includes: Cambridge-Lee, Mueller Streamline, or approved equal.

2. **Brass Material**

   a. Brass pipe – Brass pipe will conform to ASTM B43 standards. A list of approved pipes includes: Cambridge-Lee, Federal WW-351, or approved equal.

   b. Brass Fittings – Brass fittings will conform to ANSI Standard B16.15, B16.24, B2.1, T-94-1 and be a minimum of Class 125. A listing of approved manufacturers includes: Lee Brass, Merritt Brass, or approved equal.

   c. Brass fittings for Copper Tubing – An approved listing for brass fittings for copper tube includes: Jones, Mueller, or approved equal. Parts reference numbers are shown below (See Standard Detail W-4):

   1. Jones (1-inch through 2-inch):

Jones Super Grip CTS X CTS	E-2609SG
Jones Super Grip CTS X MIP	E-2605SG
Jones Super Grip CTS C FIP	E-2607SG
Comp. x Comp. (2" only)	E-2609SG

   2. Mueller (1-inch through 2-inch):

H-15403N	CTS x CTS
H-15451N	CTS x FIP
H-15428N	CTS x MIP

3. **Corporation Stops**

a. Corporation stops will be male, iron pipe thread by compression, insulated and full throat ball valve design. A corporation stop will be installed at the water main for all services laterals two inches and smaller. Approved manufacturers of corporation stops include: Mueller, Jones, or approved equal. Part reference numbers are as shown below: (Refer to Standard Detail W-3)

1. Mueller: Part #B-25008N (CC X CTS)
Part #B-25028N (IP X CTS)
Part #B-35028N (MIP X CTS)

2. Jones: Part #E1991 (MIPXCTS SG)
Part #E1993 (MIPxFIP)
Part #E1935SG (MIP X 110CTS)
Part #E1937SG

3. Ford: Part #FB 1700 (for ARV's and Blowoffs)

4. Curb Stops

a. Approved curb stop manufacturers include: Jones, Mueller, or approved equal. Part reference numbers are shown below: (refer to Standard Detail W-4)

1. Jones: Part #E1921WSG (110 CTS X FIP w/ lockwing)
2. Mueller: Part #B-25166N (Flared X FIP w/ lockwing)

5. Dielectric Tape – Approved manufacturers for dielectric tape include Polyken #932 Hi-Tack joint wrap tape or approved equivalent flexible dielectric tape.

6. Service Saddles

a. PVC Pressure Pipe Service Saddles manufacturers include: Jones, Mueller, or approved equal. Part reference numbers as indicated below:

1. Jones: 4-inch through 12-inch saddles with 1-inch to 2-inch taps, Part #J-996

2. Mueller:

Saddle Size	Part #
4-inch	H13490
6-inch	H13491
8-inch	H13492
10-inch	H13493

12-inch	H13494

b. DIP Service Saddle manufacturers include: Jones, Mueller, or approved equal. Part reference numbers are as indicated below:

1. Jones (4-inch through 12-inch saddles with 1-inch to 2-inch taps): Part #J-979

2. Mueller 1-inch through 2-inch taps:

Saddle Size	Part #
4-inch	BR2B0474IP_ _ _*
6-inch	BR2B0684IP_ _ _*
8-inch	BR2B0899IP_ _ _*
10-inch	BR2B1104IP_ _ _*
12-inch	BR2B1314IP_ _ _*

* The last three numbers denote tap sizes (0.75”=075, 1”=100, 1.50”=150, 2”=200)

E. Appurtenances

1. Air Release Valves – Air release valves will be fusion bonded epoxy coated (per AWWA C116), vacuum break type. A listing of approved manufacturers includes Crispin, Val-Matic, or approved equal. Part reference numbers are as shown below:

Crispin	Part #	Val-Matic	Part #
1-inch	UL10	1-inch	201C-M
2-inch	UL20	2-inch	201C-M
3-inch	UL31	3-inch	201C-M
4-inch	UL41	4-inch	201C-M
6-inch	UL61	6-inch	206C-M
8-inch	UL81	8-inch	206C-M

2. Backflow Assembly – A listing of approved manufacturers and products include:

Watts:
909 and 009 Series, 1-inch to 10-inch
709 DCDA Series, 3-inch to 10-inch
909 RPDA Series, 3-inch to 10-inch

Wilkins:
975 Series, 1-inch to 2-inch only

Ames:
4000 B Series, 1-inch to 2-inch

3. **Blocking for Boxes Assembly** – A listing of approved materials includes: Concrete Stone 9-inch x 1-inch x 16-inch, Slump Block 3-inch x 3-inch x 16-inches, standard concrete brick, or approved equal.

4. **Blow Off** – Approved manufacturers and products include: Kupferle, Eclipse #78 (2-inch) or approved equal.

5. **Fittings**

   a. **Fittings for PVC Pipe** – Unless otherwise specified or shown on the approved plans, all fittings to be used with PVC Pressure Pipe will conform to the standard for "Ductile Iron Compact Fittings for Water and Other liquids" (ANSI/AWWA C153/A21.53). Approved fitting manufacturers include Tyler and US Pipe (all fittings will be USA made).

      1. All ductile iron fittings will be coated with an 8 mil nominal thickness fusion bonded epoxy conforming to the requirements of ANSI/AWWA C550 and C116/A21.16.

      2. All fittings will be wrapped in accordance with these Improvement Standards.

      3. The Contractor may use a ductile iron mechanical joint flange adapter designed for AWWA C900 pipe with connecting PVC Pressure Pipe to flanged fittings or flanged valves. Pipe ends must be cut smooth and square with no bevel. The joint will be restrained to the PVC pipe using an approved restraint method, such as the Romac 600 Series Pipe Restraining System.

   b. **Fittings for Ductile Iron Pipe** – Unless otherwise specified or shown on the approved plans, all fittings to be used with DIP will employ either mechanical joints or restrained joints conforming to the standard for "Ductile-Iron Compact Fittings for Water and Other Liquids" (ANSI/AWWA C153/A21.53 and AWWA C110). Approved fitting manufacturers include Tyler and US Pipe. (all fittings to be made in USA)

      1. All ductile iron fittings will be coated with an 8 mil nominal thickness fusion bonded epoxy conforming to the requirements of ANSI/AWWA C550 and C116/A21.16

      2. All fittings will be wrapped in accordance with these Improvement Standards.

6. **Freeze Protection for Backflow Assemblies** – Backflow assembly freeze protection materials will be comprised of the following:

   a. Laminated fabric conforming to Herculite #10 by Herculite Products (fabric will be a minimum of 10.6 oz/sq. yd.), or approved equal.

   b. Brass Rolled Rim Grommet and spur washer by Astrup, or approved equal.

   c. Polyester thread with a minimum strength of 14.2-pounds, Coats American's Star Ultra product line, or approved equal.

   d. Fiberglass insulation R-19 rated, 6-inch minimum thickness

   e. Two-inch minimum width Velcro, or approved equal.

   f. Nylon zip ties.

7. **Gaskets** – Gaskets will conform to the following specifications:

   a. Flange Gaskets - Flange gaskets will be neoprene rubber, red rubber, US Pipe Flange-Tyte, or approved equal.

   b. Push On Gaskets – Per manufacturers specifications and City approval.

   c. MJ Gaskets – Per manufacturers specifications and City approval

   d. Insulating Flange Gaskets – Insulating flange gaskets will be USSO Standard B.16.21 insulation flange kits, Type E Full Face Gasket with two side insulation as manufactured by Calpico, or approved equal.

8. **Hydrants** – Hydrants will be wet barrel type bronze. Exterior will be painted with one coat of primer and two coats “safety yellow” paint. Approved hydrants include: Clow BR2 #2060 Jones J3762. All caps will cover the threads. See Standards Detail W-11.

9. **Hydrant Bury** – Hydrant buries will be ductile iron mechanical jointed cross flange, fusion bonded epoxy coated per AWWA C116. A list of approved hydrant buries include: South Bay Foundry or Clow MJ X Size, or approved equal.

10. **Hydrant Bury Extensions** – Hydrant bury extensions will be grooved fusion bonded epoxy coated (8-mil) per AWWA C116. A list of approved hydrant bury extensions include: Clow Part # CW-EXT-BO (6-inch x 6-

inch through 6-inch x 36-inch), Tyler (6-inch x 6-inch through 6-inch x 33-inch), or approved equal.

11. **Hydrant Check Valves –** A listing of approved hydrant check valves includes: Jones J5000S, or approved equal. Contact the City Engineer for pressure zone information. Depending on locations, hydrant check valves may not be required, please refer to City Engineer.

12. **Location Stakes –** A list of approved off-site location stakes include: Carsonite CRM3 072 08 with anchor barb kit or approved equal with caution stickers attached (112CW-A or approved equal) and organization identification decal stating: CITY OF LINCOLN – CALL BEFORE DIGGING (916) 434-2450.

13. **Mainline Valve Lock-Out –** A list of approved manufacturers and part reference numbers include: SW Services PC800, DC600, or approved equal.

14. **Manhole Frame and Cover –** A listing of approved manufacturer and part reference number includes: South Bay Foundry (SBF-1920 RV-W), or approved equal.

15. **Meters –** All meters are to be purchased by the Builder/Developer from the City and installed by the City Public Services at (916) 434-2450. Meters to be auto read with touch pad. Meters to be Census Technology SR II.

16. **Meter Idlers –** A listing of approved meter idler manufacturers include: Ford or approved equal. Part reference numbers are shown below:

Ford	Part #
1-inch	IDLER-4P
1.5-inch	IDLER-6-NL

17. **Meter Setters** – A listing of approved meter setter manufacturers include: Mueller or approved equal. Part reference numbers are shown below:

Mueller	Part #
1-inch	B-24118-2
1.5-inch to 2-inch	B-2423-99000

18. **Meter Spud Couplers** – A listing of approved meter spud couplers manufacturers include: Ford, Jones, Mueller, or approved equal. Part reference numbers are shown below:

Ford	Part #	Mueller	Part #
1.5-inch to 2-inch	CF31-XX-NL	1-inch	H-10890N

19. **Nuts and Bolts**

    a. **Flange Bolts and Nuts -** Flange bolts and nuts-flange bolts and nuts shall conform to a minimum ASTM#A307 or as approved by City Engineer. Bolts less than ¾-inches in diameter shall be a minimum Grade B (heavy hex) or as approved by City Engineer. Bolts ¾-inches and larger in diameter shall be a minimum Grade A (standard hex) or as approved by City Engineer.

    b. **Hydrant Bolts -** Hydrant bolts to be Hollow Break Away, 5/8-inch x 3.5-inch, conforming to ASTM-A307 Grade A & B Low Carbon Steel.

    c. **Meter Bolts -** Meter bolts are to be stainless steel, Grade 316 with brass nuts.

    d. **Tee Bolts -** Steel bolts are to be 3/4-inch high strength, low alloy steel with a heavy nut, conforming to AWWA Standard C111-90.

20. **Nylon Bushings –** Nylon Bushings will be 76-76R, 2 1/2 –inch NST x 2-inch pipe.

21. **Patching Material –** A listing of approved manufacturers and part reference numbers for patching DIP include: Cop-Coat Carboline Company (Bitumastic No. 50, Coal Tar), or approved equal.

22. **Polyethylene Encasement –** Polyethylene film for encasement will have a minimum thickness of 8 mils. The minus tolerance on thickness will not exceed ten percent of the nominal thickness. The encasement of pipe with polyethylene will be in either type 1 or sheet form.

    Polyethylene film will be manufactured from a Type 1, Class C raw polyethylene material conforming to "Polyethylene Encasement for Ductile-Iron Piping for Water and Other Liquids" (ANSI/AWWA C105/A21.5). Approved manufacturers include: Fee Spec's-LP378D Northtown, Fulton Enterprise Inc., Global Polymer Tech, Unisource, or approved equal.

23. **Pressure Regulators –** A listing of approved all brass pressure regulator systems include: Watts (1-inch through 2-inch, UB5-series), Wilkens (1-inch through 2-inch 600 series and 2.5-inch through 3-inch 5YSBR), or approved equal.

24. **Restraints**

   a. PVC - Approved restraint systems for PVC Pressure Pipe include: Certain Teed Certa Lok (for straight runs only), EBAA Iron 2000PV, Romac Grip Rings, or approved equal.

      DIP - Approved restraint systems for DIP include: Field Lok Gaskets by US Pipe (3-inches through 24-inches diameter only), Mega Lug 1100 Series, TR Flex or approved equal.

25. **Riser Stock –** Riser stock will be 6-inch or 4-inch diameter Schedule 40 PVC inside meter boxes. Riser stock will be 8-inch diameter PVC C900 for all main line valves.

26. **Sampling Stations –** Sampling stations will be purchased by the contractor through their supplier. A list of approved sampling stations includes: Placer Waterworks 30" Water Sampling Station, Water Plus Corporation Model 301-W Stainless Steel Sampling Station**,** or approved equal.

27. **Sap Seal –** A listing of approved products include Sap Seal Products-Heavy Hex With Grease, or approved equal.

28. **Service Boxes and Lids –** All box lids are to be permanently marked with the appropriate label (i.e, Water, ARV, Blow-off, CPT, etc.) and "COL". A list of approved box manufacturers include: Christy or approved equal. Part reference numbers are shown below: (Traffic lids to be approved by City)

Size	Christy Park Number
1-in	Box-B30, FL30, Cover-FL-30-T
1-inch (double service)	Box-B30, FL30, Cover-FL-30-T (2EA)
1 1/2-in to 2-in	Box-B40, Cover-B40-61J, Cover-B40T
3-in to 4-in	Box-B48, Cover-B48-62J, Cover-B48T2
6-in to 10-in	Box-B48, R-17924 PIT, Cover-R-17-52H
Note: 1. All covers will have a 1.75-inch probe hole offset at the upper 1/3 portion of the lid. 2. B40 box and larger to have 2-piece steel lid due to weight (non bolt down)	

29. **Silicone –** Silicone will be clear, 100% silicone with a 25 year life, or approved equal.

30. **Telemetering Conduit -** Telemetering conduit will be minimum 1/2-inch diameter Schedule 40 PVC or polyethylene ("Inter-Duct") pipe. Both will have a nylon pull string.

31. **Tracing Wire –** Tracing wire will be 10-gauge minimum UF rated solid copper with plastic insulation

32. **Tracing Wire Connectors –** Tracing wire connector will be split-bolt type connectors. A listing of approved products include: Permanent Seal-Wire Connectors – Part #97811 or approved equal.

33. **Tracing Wire Mastic Tape Seal –** Tracing wire mastic tape will be 3M Mastic Tape #2229 or approved equal.

34. **Valves**
    a. **Butterfly Valves –** Butterfly valves to be used on diameters ranging from 16-inch to 72-inch. A list of approved valves include: Pratt Ground Hog (Holiday free epoxy coated), Mueller Lineseal III (Holiday free epoxy coated), or approved equal. Certification will be provided by the valve manufacturer stating the epoxy lining is holiday free. (Made in USA)

    b. **Gate Valves –** Gate valves for 2-inch through 2-1/2-inch services will be NIBCO-113 Bronze or approved equal. Gate valves to be used on diameters ranging from 3-inch to 12-inch and will be resilient seat or wedge type and meet C509 Class C Specifications. A list of approved valves includes: M & H 4067 RW Gate Valve, Mueller-A-2361 RS Gate Valve, US Pipe Metro Seal 250, or approved equal. (Made in USA)

    c. Two part epoxy repair kit will be provided by valve manufacturer.

35. **Valve Boxes –** All valve boxes in street and other traffic areas will be designed to H-22 loading conditions. A list of approved manufacturers and part reference numbers include: Christy Type G5, Christy Type B17 by 30, BES Type G5, or approved equal.

36. **Water Pipe Marking Tape** – 12” wide non-detectable warning tape. Approved manufacturers and materials include: Northtown Company, Christy, or approved equal.

37. **Zinc Caps** – A listing of approved manufacturers include: Mars, or approved equal. Part reference numbers are shown below.

    Mars: 7/16-inch to 1/2-inch – 2.5 ounce weight
    5/8-inch to 1-inch – 6 ounce weight

DOMESTIC WATER DETAILS

Typical Water Trench Detail *W-1*
Water Service Trench Detail..... *W-2*
Service Saddle Connection Detail..... *W-3*
Residential 1" or 1-1/2" Service Line *W-4*
Double Meter Residential 1" x 1" 1 1/2" Service Line *W-4A*
Water Service Location *W-5*
Thrust Block Bearing Area *W-6*
Thrust Block and Anchor Details *W-6A*
2" Blow Off Valve..... *W-7*
4" Blow Off Valve..... *W-7A*
1" and 2" Air Release Valve *W-8*
4" Combination Air Release Valve And Vacuum..... *W-8A*
Gate and Butterfly Valve and Box *W-9*
Sampling Station With Pressure Recorder..... *W-10*
Water Sampler With Pressure Recorder *W-10A*
Fire Hydrant Installation *W-11*
Onsite Fire Protection and Backflow Assembly..... *W-12*
Water Service Cut Off Detail *W-12A*
Typical Fire Services *W-13*
Fire Services Installation *W-14*
Commercial ¾" & 1" Service Line..... *W-15*
Commercial 1 ½" & 2" Service Line..... *W-16*
Commercial 3" and Larger Service..... *W-17*
Commercial 1 ½" & 2" Irrigation Service..... *W-18*
Construction Water Connection..... *W-19*
Meter Cover Water Service *W-20*
Double Meter Cover Water Service..... *W-21*

[THIS PAGE INTENTIONALLY LEFT BLANK]

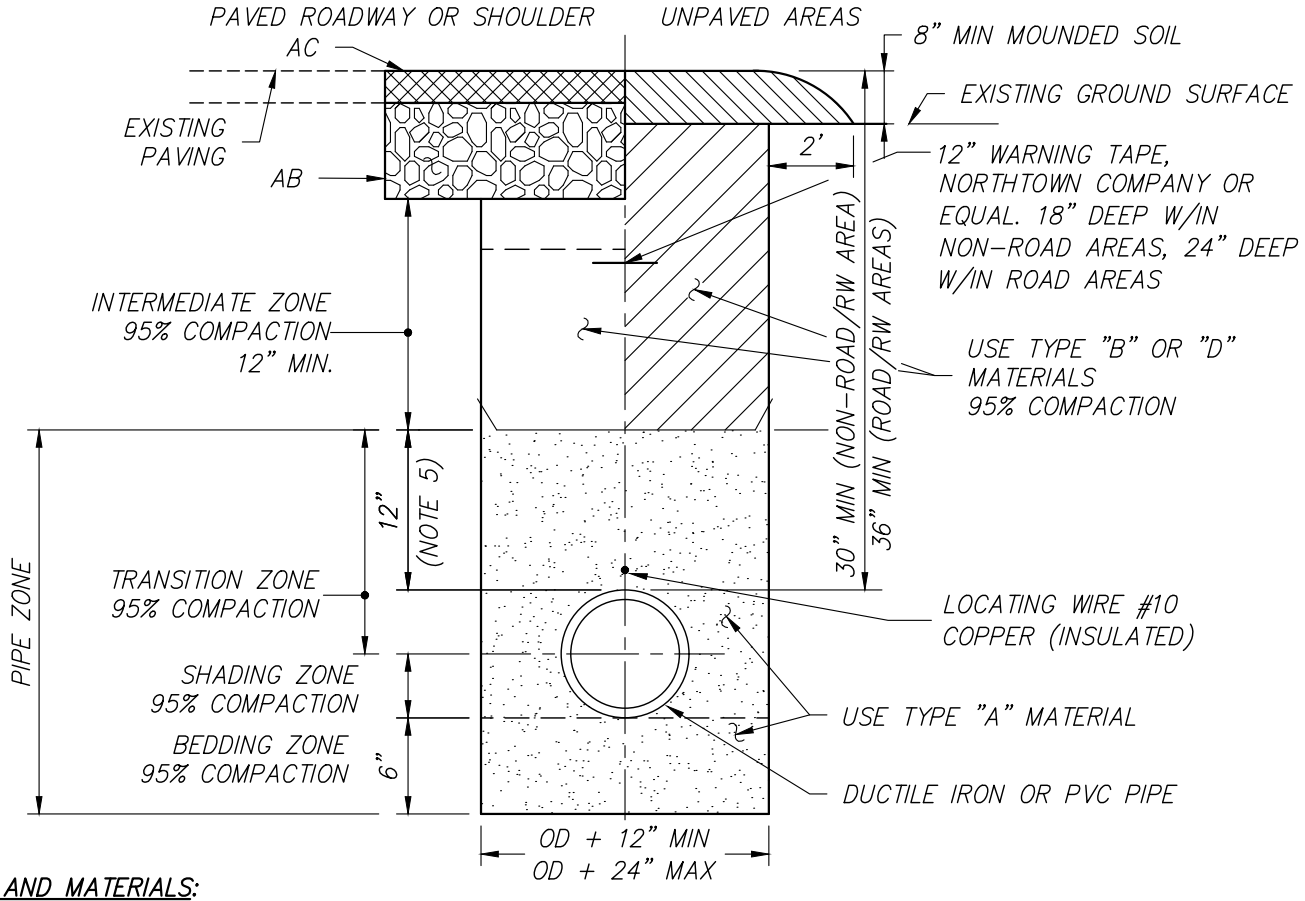

BEDDING AND MATERIALS:

TYPE "A" MATERIAL: 3/8" MINUS IMPORTED SCREENED SAND WITH MINIMUM SAND EQUIVALENT OF 50 PER CTM 217. ALL GRADATIONS TO BE APPROVED BY CITY PRIOR TO CONSTRUCTION.

TYPE "B" MATERIAL: CLASS 2 AGGREGATE BASE PER CALTRANS STANDARD SPECIFICATIONS.

TYPE "D" MATERIAL: CRUSHED ROCK OR SOIL-ROCK MIXTURE (NATIVE) NOT TO EXCEED 3". UP TO A 6" MINUS MATERIAL MAY BE USED WITH SPECIAL CONSIDERATIONS AND CONDITIONS APPROVED BY CITY AND GEOTECHNICAL ENGINEER. THE MATERIAL WILL BE COMPLETELY FREE OF WOOD, ROOTS OR OTHER DELETERIOUS MATERIAL. MATERIAL NOT BE USED WITHIN 24" OF TOP OF PIPE WITHOUT CITY ENGINEERS APPROVAL. COMPACTION WILL BE BY VIBRATORY EQUIPMENT OR OTHER APPROVED DEVICES. THE CITY MAY REQUIRE THAT THE MATERIAL BE SCREENED. A LAYER OF GEOTEXTILE FABRIC WILL BE PLACED BETWEEN THE PIPES AND INTERMEDIATE BACKFILL ZONE. MATERIAL WILL ONLY BE USED WITH GEOTECHNICAL ENGINEER'S RECOMMENDATION AND WITH APPROVAL OF THE CITY ENGINEER.

NOTES:

1. CREEK CROSSING OR SHALLOW TRENCH SHALL REQUIRE SPECIAL PIPE PER APPROVAL OF CITY ENGINEER.
2. BEDDING FOR OTHER APPROVED PIPE TO BE APPROVED BY CITY ENGINEER AND PER ASTM C12.
3. CITY WILL REQUIRE CUT-OFF WALLS AND TRENCHES TO CONTROL PERMEABILITY AND/OR REQUIRE GEOTEXTILE BARRIER WRAP FOR MATERIAL NOT MEETING A TYPE "A" OR "B" MATERIAL SPEC.
4. SHOVEL SLICING TO BE USED ALONG WITH MECHANICAL (VIBRATORY) AT 12" MAX LOOSE LIFTS.
5. TYPE "D" MATERIAL REQUIRES 24" INCHES BACKFILL ABOVE PIPE.
6. TYPE "D" MATERIAL MAY ONLY BE USED WITH CITY ENGINEER APPROVAL AND GEOTECHNICAL ENGINEER RECOMMENDATION.

CITY OF LINCOLN
ENGINEERING DEPARTMENT

TYPICAL WATER TRENCH DETAIL

REVISIONS:	DATES:	APPROVED:
		CITY ENGINEER DATE

SCALE: NONE
DATE: SEPTEMBER 2019
DRAWN BY: C.G.

W-1

NOTES:

1. DEPTH OF BEDDING TO VARY UPON EXISTING SOIL CONDITIONS PER APPROVAL OF CITY.
2. 12" MIN. IF TYPE "D" MATERIAL IS USED WITHIN INTERMEDIATE ZONE. TYPE "D" MATERIAL TO BE APPROVED BY SOILS ENGINEER AND CITY ENGINEER.

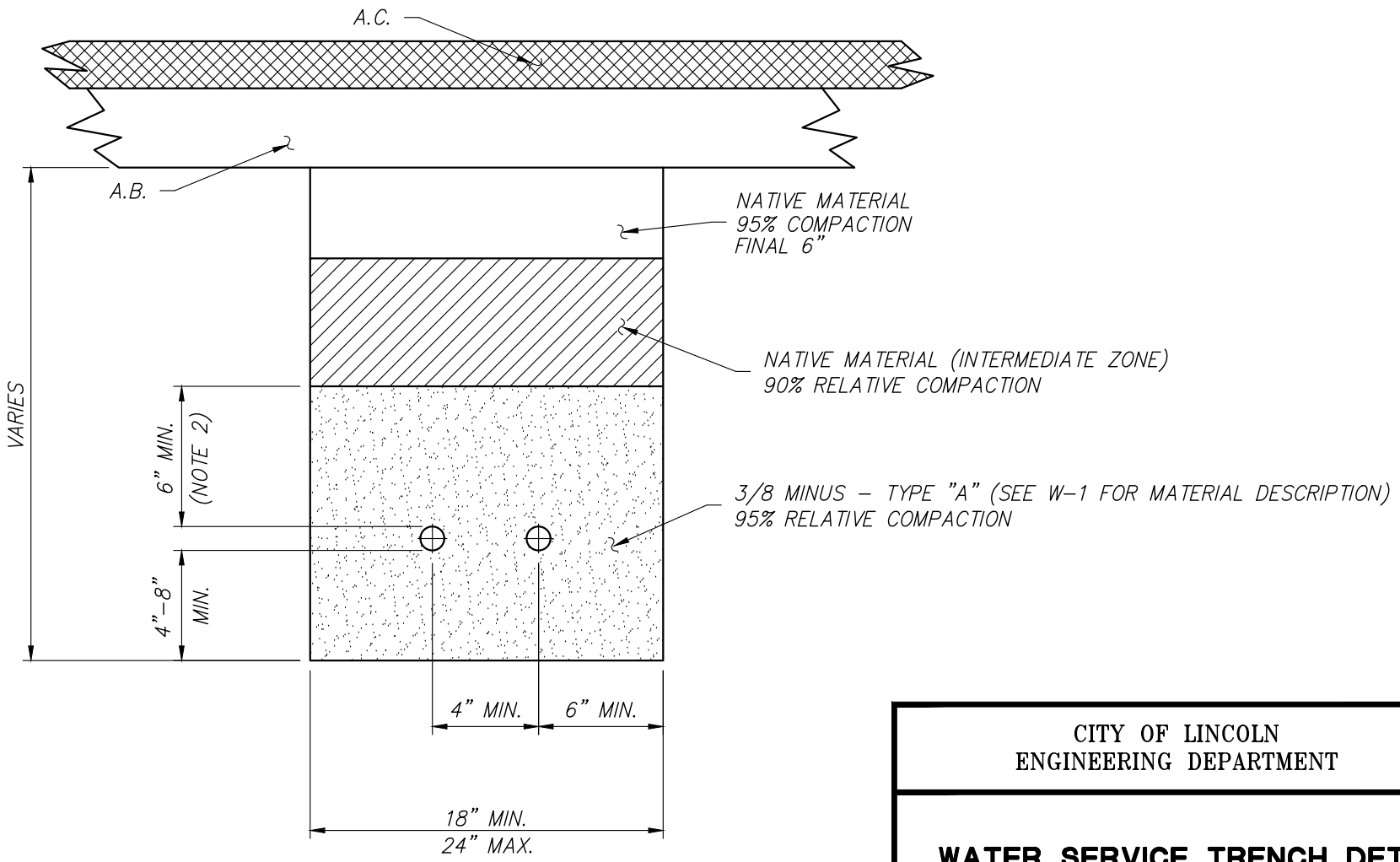

CITY OF LINCOLN
ENGINEERING DEPARTMENT

WATER SERVICE TRENCH DETAIL

REVISIONS:	DATES:	APPROVED:
		CITY ENGINEER DATE

SCALE: NONE
DATE: SEPTEMBER 2019
DRAWN BY: C.G.

W-2

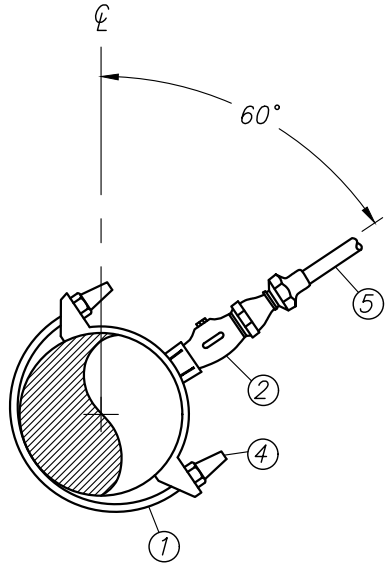

DOUBLE STRAP
DUCTILE IRON PIPE SADDLE

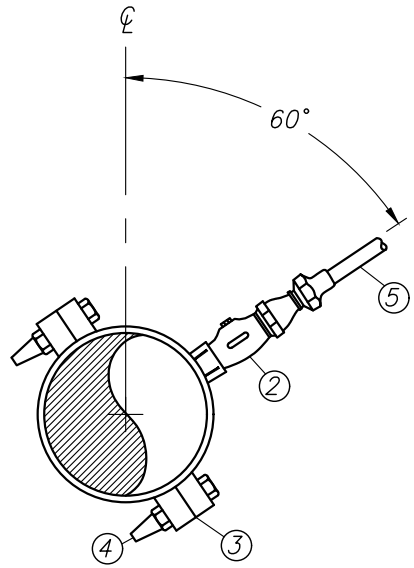

PVC PIPE SADDLE

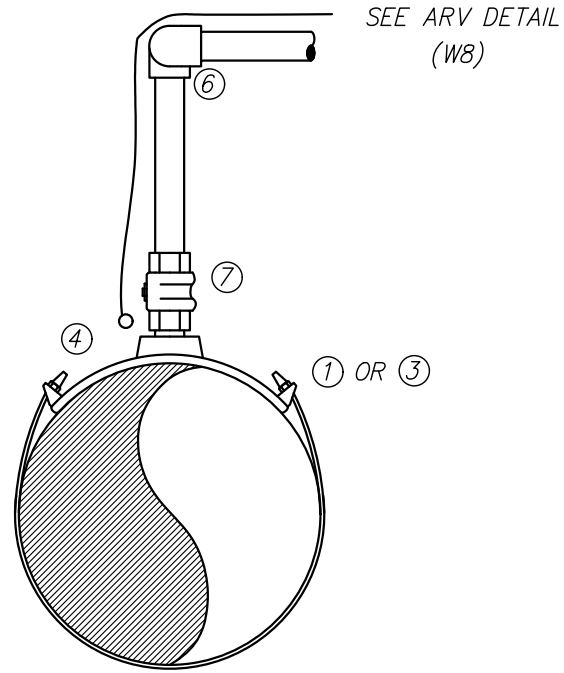

ARV AND BLOWOFF SADDLE

MATERIALS:

1. DOUBLE STRAP CC THREAD BRONZE SADDLE JONES #J-979, MUELLER BR2B OR EQUAL.
2. INSULATING CORPORATION STOP-MUELLER B-25008 INSULATED BALL CORP STOP OR EQUAL (INLET: CC THREAD AND OUTLET: COMPRESSION)
3. BRASS SADDLE FOR PVC MAIN - JONES #J-996 OR EQUAL CC THREAD
4. ZINC CAPS ON ALL BOLTS (ONLY WITH NON-INSULATED CORPORATION STOP)
5. COPPER SERVICE W/ POLYETHYLENE COATING
6. SWING JOINT (2 - 90 BRASS FITTINGS)
7. FORD FB 1700 OR EQUAL (CC x FIP CORP STOP)

NOTES:

1. WRAP CORPORATION STOP WITH AN APPROVED 8 MIL POLYETHYLENE. ALSO WRAP 3" MIN. OF DIELECTRIC TAPE FROM MAIN (PLOYKEN 932 OR EQUAL).
2. SADDLES SHALL BE WRAPPED IN 8 MIL POLYETHYLENE AND BACKFILLED WITH TYPE "A" BACKFILL.
3. TRACING WIRE SHALL BE REQUIRED ON ARV, HYDRANT RUNS, BLOW OFFS, ALL SERVICES, AND OTHER MAJOR APPURTENANCES.

CITY OF LINCOLN
ENGINEERING DEPARTMENT

SERVICE SADDLE CONNECTION DETAIL

REVISIONS:	DATES:	APPROVED:
		CITY ENGINEER DATE

SCALE: NONE
DATE: SEPTEMBER 2019
DRAWN BY: C.G.

W-3

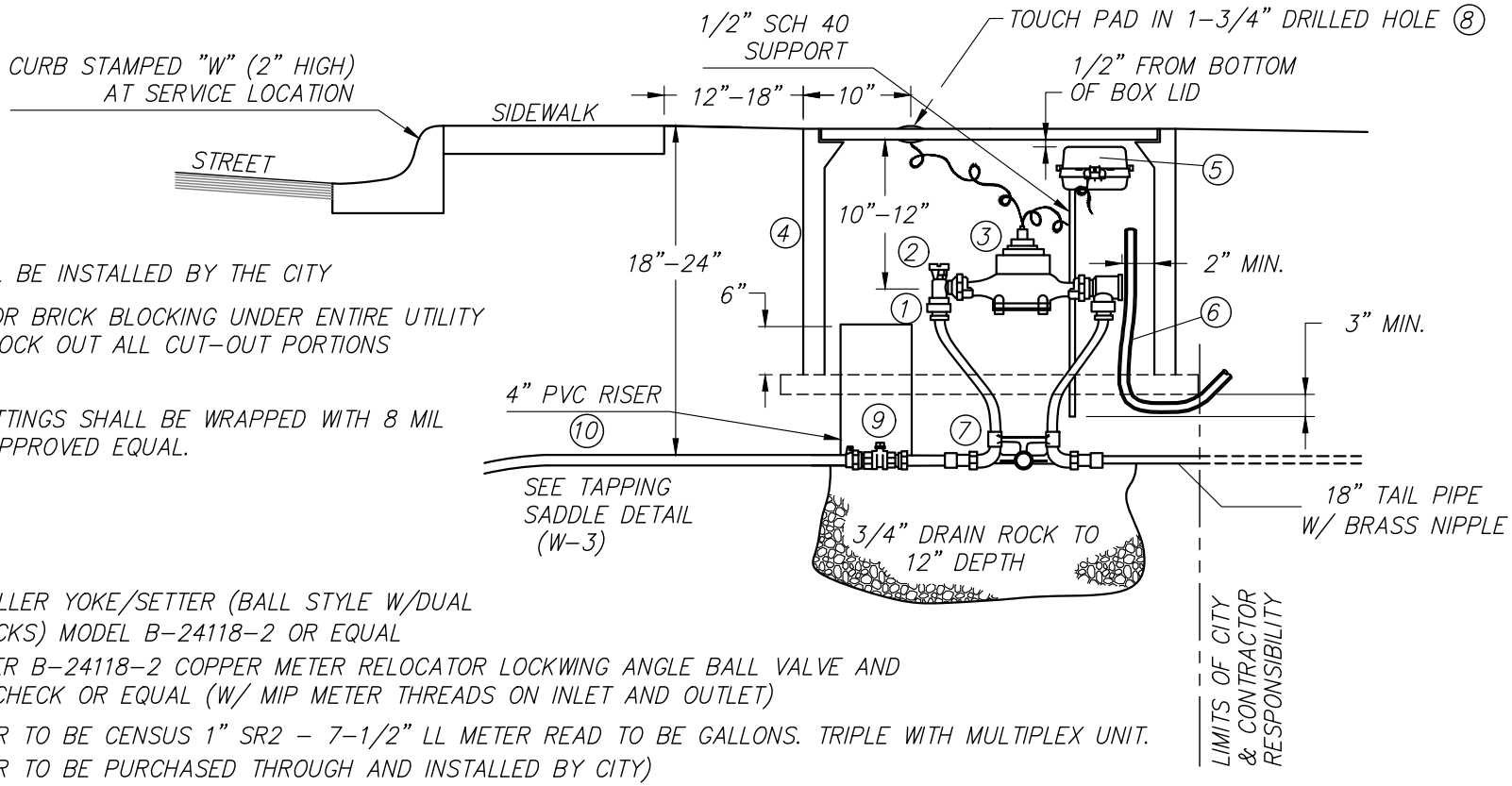

NOTES:

1. WATER METER SHALL BE INSTALLED BY THE CITY
2. INSTALL CONCRETE OR BRICK BLOCKING UNDER ENTIRE UTILITY BOX PERIMETER. BLOCK OUT ALL CUT–OUT PORTIONS OF THE METER BOX.
3. BURIED PIPE AND FITTINGS SHALL BE WRAPPED WITH 8 MIL POLYETHYLENE OR APPROVED EQUAL.

MATERIALS LIST:

(1) **METER SETTER** MUELLER YOKE/SETTER (BALL STYLE W/DUAL CHECKS) MODEL B–24118–2 OR EQUAL

(2) **ANGLE STOP** MUELLER B–24118–2 COPPER METER RELOCATOR LOCKWING ANGLE BALL VALVE AND DUAL CHECK OR EQUAL (W/ MIP METER THREADS ON INLET AND OUTLET)

(3) **WATER METER** METER TO BE CENSUS 1" SR2 – 7–1/2" LL METER READ TO BE GALLONS. TRIPLE WITH MULTIPLEX UNIT. METER TO BE PURCHASED THROUGH AND INSTALLED BY CITY)

(4) **METER BOX** CHRISTY MODEL B30 OR EQUAL (W/BOLT DOWN LIDS, READING LIDS, NO KNOCK OUTS) W/1–3/4" ROUND OPENING FOR (TOUCH PAD) IN COVER (CONTRACTOR RESPONSIBILITY)

(5) **REMOTE TRANSMITTER WITH SUPPORT** MXU AND TRPL TO BE PURCHASED THROUGH AND INSTALLED BY CITY

(6) **CONNECTION CONDUIT** 1/2" SCH 80 CONDUIT TO BE INSTALLED BY CONTRACTOR. TO CONNECT MULTIPLE METERS (SEE DETAIL W–5)

(7) **METER COUPLING** MUELLER H–10890 OR EQUAL (1" x 4" M.I.P. x SWIVEL NUT)

(8) **TOUCH PAD** PURCHASED BY DEVELOPER AND TO BE INSTALLED BY CITY

(9) **CURB STOP** MUELLER B–25166 BALL METER VALVE W/ LOCKWING OR EQUAL (INLET: COPPER FLARE AND OUTLET: F.I.P.) W/IN 4" PVC RISER

(10) **COPPER PIPE** TYPE K COPPER, ALL SERVICE TO 1" (FLARED FITTING)

CITY OF LINCOLN
ENGINEERING DEPARTMENT

RESIDENTIAL MIN 1" OR 1-1/2" SERVICE LINE

REVISIONS:	DATES:	APPROVED:
		CITY ENGINEER DATE

SCALE: NONE
DATE: SEPTEMBER 2019
DRAWN BY: C.G.

W-4

NOTES:

1. WATER METER SHALL BE INSTALLED BY THE CITY
2. INSTALL CONCRETE OR BRICK BLOCKING ENTIRE UTILITY BOX PERIMETER BLOCK OUT ALL CUT-OUT PORTIONS OF THE METER BOX.
3. BURIED PIPE AND FITTINGS SHALL BE WRAPPED WITH 8 MIL POLYETHYLENE OR APPROVED EQUAL.

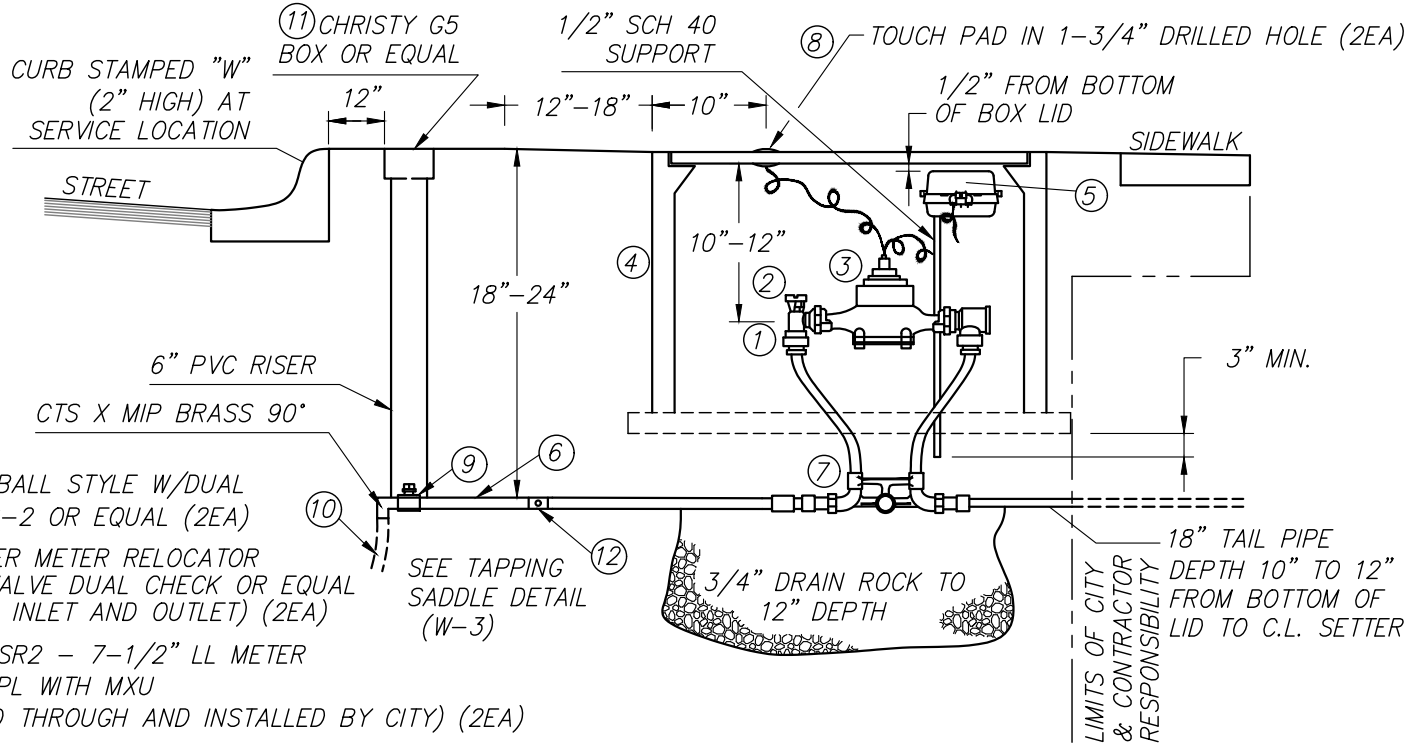

MATERIALS LIST:

(1) **METER SETTER:** MUELLER YOKE/SETTER (BALL STYLE W/DUAL CHECKS) MODEL B-24118-2 OR EQUAL (2EA)

(2) **ANGLE STOP:** MUELLER B-24118-2 COPPER METER RELOCATOR LOCKWING ANGLE BALL & VALVE DUAL CHECK OR EQUAL (W/MIP METER THREADS ON INLET AND OUTLET) (2EA)

(3) **WATER METER:** METER TO BE CENSUS 1" SR2 - 7-1/2" LL METER READ TO BE GALLONS. TRPL WITH MXU (METER TO BE PURCHASED THROUGH AND INSTALLED BY CITY) (2EA)

(4) **METER BOX:** 24"x36" DOUBLE METER BOX BY CHRISTY OR EQUAL (W/BOLT DOWN LID, SEE W-21

(5) **REMOTE TRANSMITTER WITH SUPPORT:** MXU AND TRPL TO BE PURCHASED THROUGH AND INSTALLED BY CITY (2EA)

(6) **BRASS NIPPLE:** 1 1/2" FROM CURB STOP TO TEE.

(7) **METER COUPLING:** MUELLER H-10890 OR EQUAL (1" x 2 1/2" M.I.P. x SWIVEL NUT) (2EA)

(8) **TOUCH PAD:** PURCHASED BY DEVELOPER AND TO BE INSTALLED BY CITY (2EA)

(9) **CURB STOP:** JONES E-1900 BALL VALVE 1 1/2" FIP x 1 1/2" FIP W/ LOCKWING OR EQUAL (INLET: F.I.P. AND OUTLET: F.I.P.) W/IN 6" PVC RISER

(10) **COPPER SERVICE PIPE:** TYPE K COPPER, ALL DOUBLE METER SERVICES TO BE 1 1/2" (FLARED FITTING)

(11) **G5 VALVE BOX CENTERED OVER THE CURB STOP**

(12) **1 1/2" X 1" TEE (SEE DETAIL W-5)**

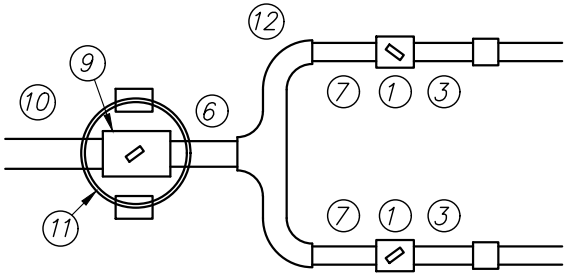

CITY OF LINCOLN
ENGINEERING DEPARTMENT

DOUBLE METER
RESIDENTIAL 1" x 1"
1 1/2" SERVICE LINE

REVISIONS:	DATES:	APPROVED:
		CITY ENGINEER DATE

SCALE: NONE
DATE: SEPTEMBER 2019
DRAWN BY: C.G.

W-4A

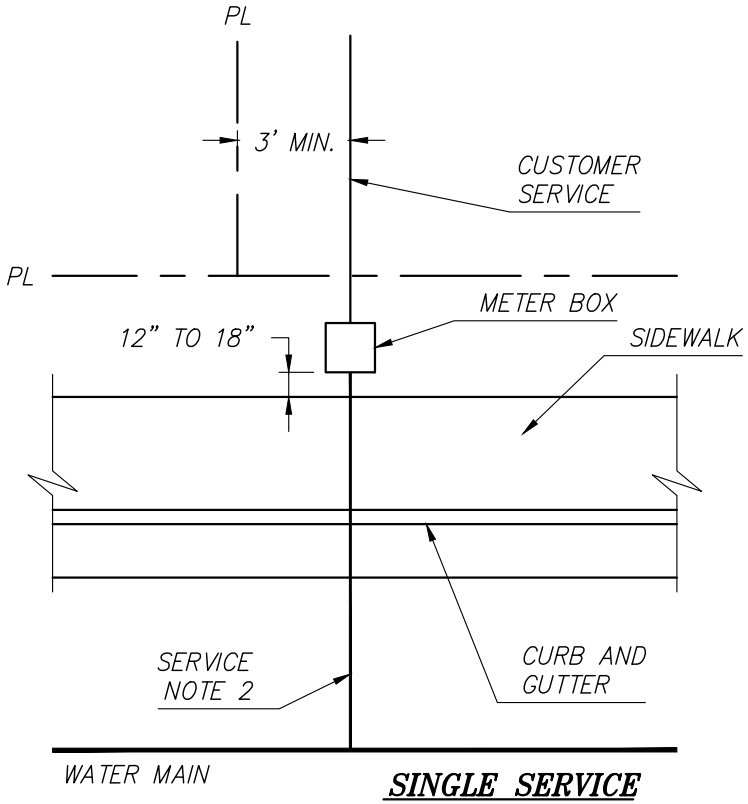

SINGLE SERVICE

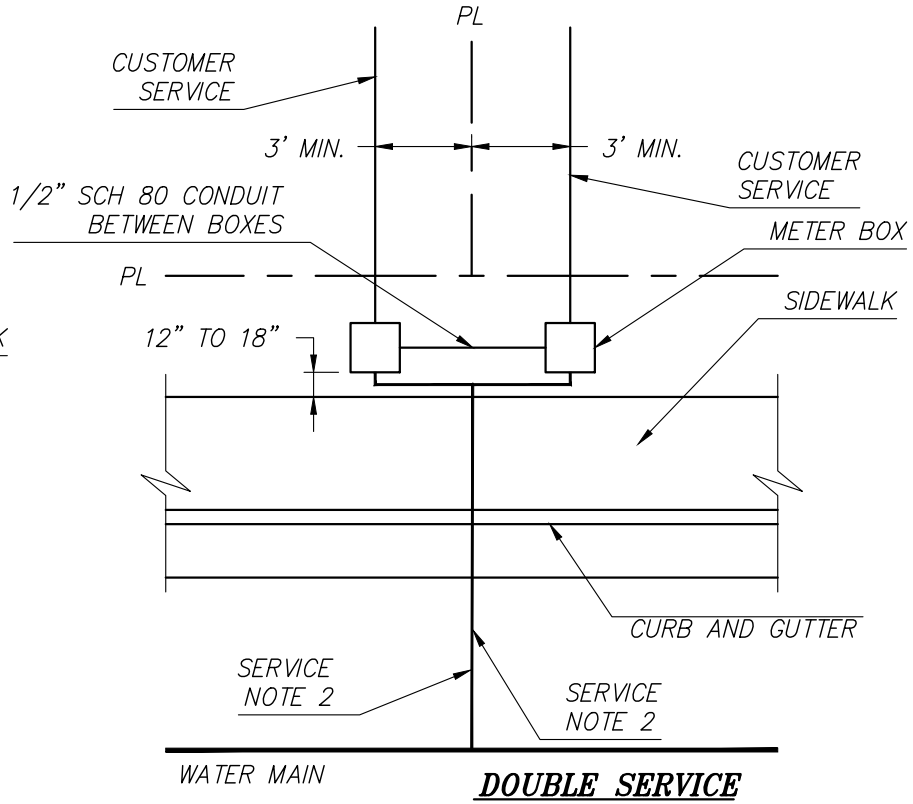

DOUBLE SERVICE

NOTES:

1. METER SIZE SHALL BE 1" x 1", THRU 2". METER SHALL BE INSTALLED BY THE CITY OF LINCOLN.
2. SERVICE PIPE AND COUPLINGS PER MATERIALS LIST, INCLUDING TOUCH PAD AND REMOTE UNIT (REFER TO DETAIL W-4).
3. METER BOXES SHALL BE PER MATERIALS LIST, (REFER TO DETAIL W-4).
4. METER BOXES SHALL HAVE CONCRETE BOLT DOWN LIDS (STEEL TRAFFIC LIDS IN DRIVEWAYS OR AREAS WITH ROLL CURB) SEE MATERIALS LIST, DETAIL W-4, W-4A.
5. SADDLES PER MATERIALS LIST, (REFER TO DETAIL W-3).
6. METER BOXES AND SERVICE PIPING SHALL BE INSTALLED WITH A MINIMUM OF 3' CLEARANCE FROM ALL ELECTRICAL TRANSFORMERS, LIGHT STANDARDS AND OTHER UTILITY BOXES OR VAULTS.

CITY OF LINCOLN
ENGINEERING DEPARTMENT

WATER SERVICE LOCATION

REVISIONS:	DATES:	APPROVED:
		CITY ENGINEER DATE

SCALE: NONE
DATE: SEPTEMBER 2019
DRAWN BY: C.G.

W-5

REQUIRED BEARING AREA – TOTAL SQUARE FEET

TYPE OF FITTING		90° BEND	45° BEND	11 1/4" OR 22 1/2" BEND	TEE OR DEAD END	TEE W/PLUG	CROSS W/PLUG	CROSS W/PLUGS
TYPICAL INSTALLATION		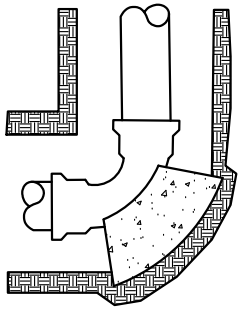	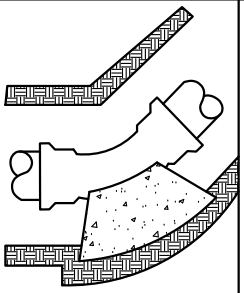	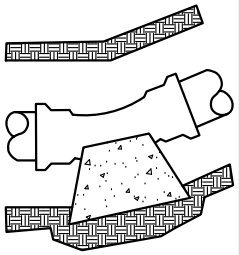	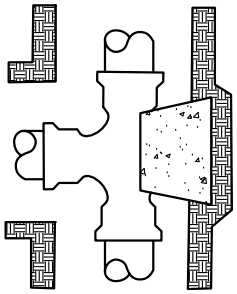	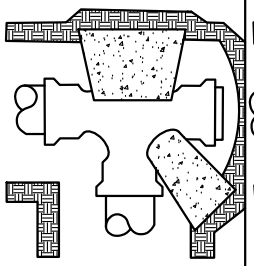	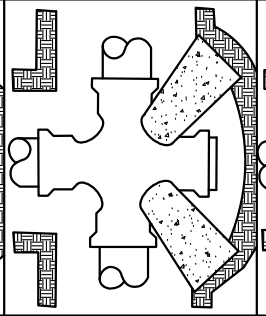	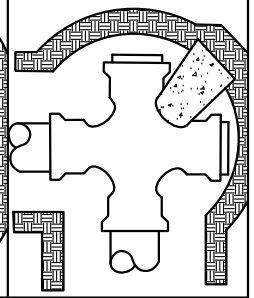
SIZE OF PIPE	3"	1	0.5	0.5	1	1	1	1
	4"	2	1	1	2	2	2	2
	6"	4	2	1	3	4	4	4
	8"	7	4	2	5	7	7	7
	10"	12	6	3	8	12	12	12
	12"	16	10	5	12	16	16	16
	16"	28	15	8	21	28	28	28

NOTES:

1. THRUST BLOCKS TO BE CONSTRUCTED PER CALTRANS STANDARDS
2. AREAS GIVEN ARE FOR CLASS 150 PIPE AT TEST PRESSURE OR 150 P.S.I. IN SOIL WITH 2,000 P.S.F. BEARING CAPACITY. INSTALLATIONS USING DIFFERENT PIPE, TEST PRESSURES, AND/OR SOIL TYPES SHOULD ADJUST AREAS ACCORDINGLY AND CALCULATE BEARING AREA, SUBJECT TO APPROVAL OF ENGINEER.
3. BLOCKS TO BE POURED AGAINST UNDISTURBED SOIL.
4. JOINTS AND FACE OF PLUGS TO BE KEPT CLEAR OF CONCRETE.
5. ALL BENDS 45° OR GREATER SHALL ALSO HAVE RESTRAINT JOINTS AND THRUST BLOCKS; SUBMIT SHOP DRAWINGS TO CITY FOR APPROVAL.
6. BENDS 22 1/2° AND LESS WILL REQUIRE RESTRAINT JOINTS ONLY, PER EBBA SPECS OR EQUAL.

REVISIONS:	DATES:	APPROVED:
		CITY ENGINEER DATE

CITY OF LINCOLN
ENGINEERING DEPARTMENT

THRUST BLOCK BEARING AREA

SCALE: NONE
DATE: SEPTEMBER 2019
DRAWN BY: C.G.

W-6

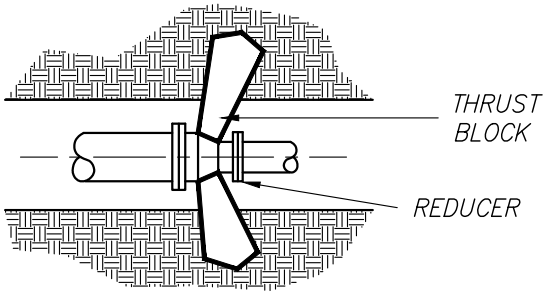

CASE 'A'

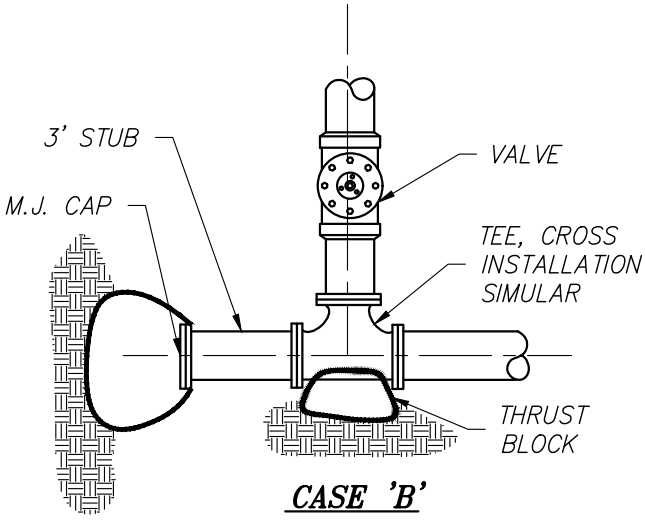

CASE 'B'

TYPICAL DEAD END
ALLOWING FOR FUTURE EXTENSION

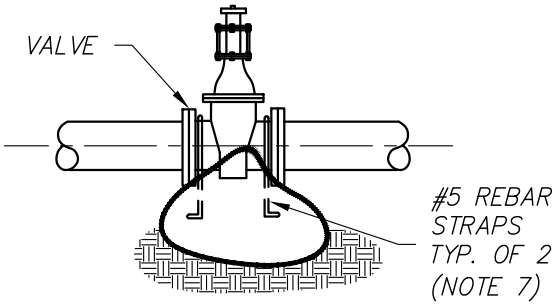

CASE 'D'

VERTICAL SECTION
ANCHOR BLOCK
(VALVES 24" AND GREATER)

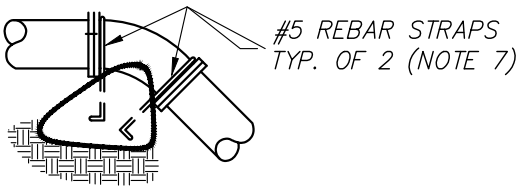

CASE 'C'

VERTICAL SECTION
ANCHOR BLOCK

NOTES:

1. THRUST BLOCKS SHALL BE CONSTRUCTED SO THAT MAJOR BEARING SURFACE IS IN DIRECT LINE WITH THE MAJOR FORCE CREATED BY THE PIPE OR FITTINGS.
2. ALL CONCRETE SHALL BE CLASS "B" PER CALTRANS STANDARDS.
3. CONCRETE SHALL BE FLUID ENOUGH SO THAT IT MAY BE WORKED AROUND THE FITTINGS. A DOUBLE LAYER OF 8 MIL POLYETHLENE FILM SHALL BE PLACED BETWEEN CONCRETE AND METAL FITTING.
4. CONCRETE SHALL BE KEPT BEHIND THE BELL OF THE FITTING.
5. THE THRUST BLOCK BEARING SURFACE SHALL BE PLACED AGAINST UNDISTURBED EARTH AND SHALL HAVE A VOLUME OF 6 CU. FT. AND A MINIMUM BEARING AREA OF 4 SF. (NOTE 8)
6. A CONCRETE PAD SHALL BE PLACED UNDER ALL VALVES 12 INCHES AND LARGER FOR SUPPORT.
7. ALL ANCHOR BLOCKS SHALL BE CONSTRUCTED WITH A MINIMUM OF (2) #5 REBAR STRAPS.
8. EACH THRUST OR ANCHOR BLOCK SHALL BE DESIGNED FOR EACH SPECIFIC APPLICATION. ALL THRUST BLOCKS FOR 12 INCH DIAMETER PIPE AND LARGER TO BE ENGINEERED AND APPROVED BY THE CITY ENGINEER.
9. ALL ANCHOR BLOCKS (CASE C ONLY) SHALL BE ENGINEERED REGARDLESS OF PIPE SIZE AND APPROVED BY THE CITY ENGINEER.

CITY OF LINCOLN
ENGINEERING DEPARTMENT

THRUST BLOCKS AND ANCHOR DETAILS

REVISIONS:	DATES:	APPROVED:	SCALE: NONE DATE: SEPTEMBER 2019 DRAWN BY: C.G.	W-6A
		CITY ENGINEER DATE		

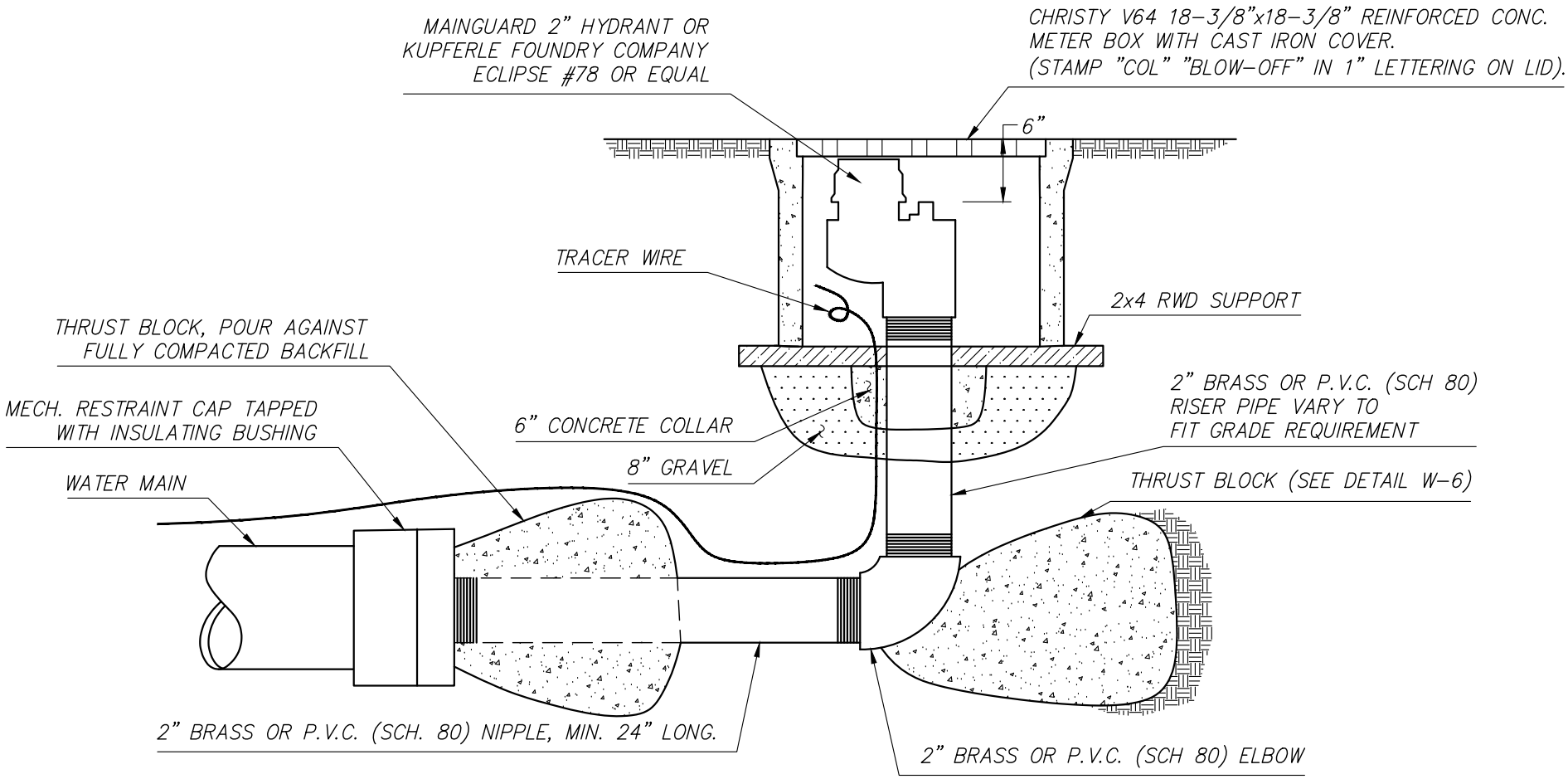

NOTE: IN-LINE BLOW-OFFS TO BE TAPPED W/ JONES #J-996 OR EQUAL W/ TRANSITION FROM COPPER TO BRASS, WITH CORROSION PROTECTION.

CITY OF LINCOLN
ENGINEERING DEPARTMENT

2" BLOW OFF VALVE

REVISIONS:	DATES:	APPROVED:
		CITY ENGINEER DATE

SCALE: NONE
DATE: SEPTEMBER 2019
DRAWN BY: C.G.

W-7

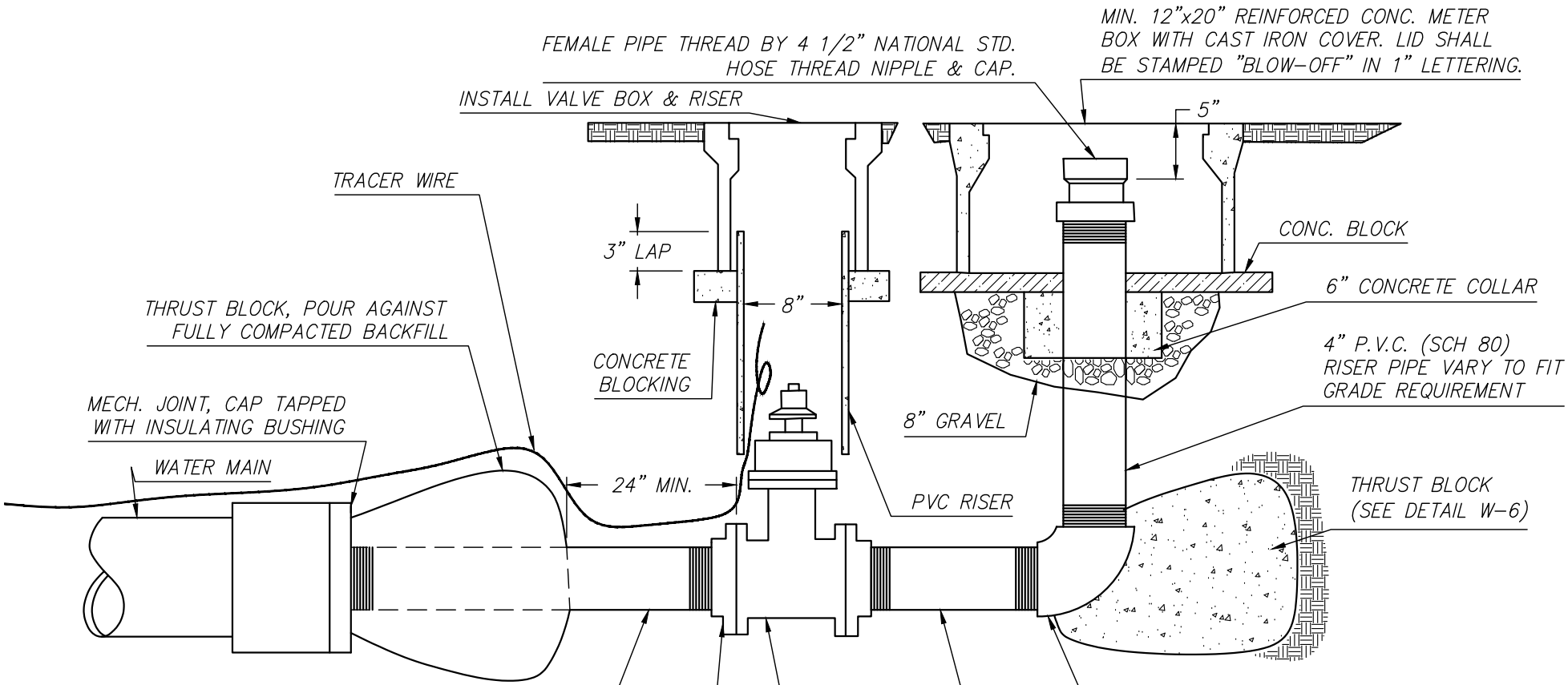

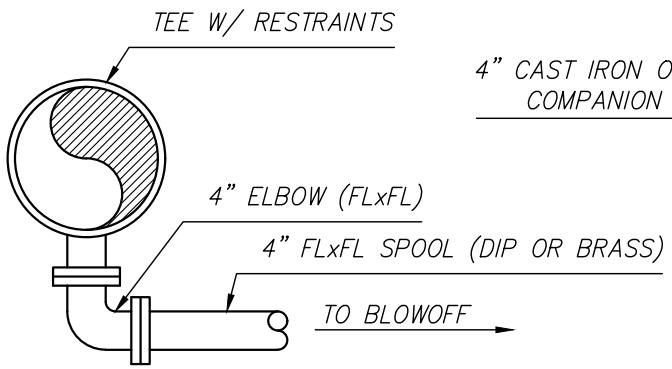

SAG POINT CONNECTION

NOTE: FOR USE IN SPECIAL SITUATIONS W/ APPROVAL OF CITY ENGINEER FOR PIPES GREATER THAN 16"

CITY OF LINCOLN
ENGINEERING DEPARTMENT

4" BLOW OFF VALVE

REVISIONS:	DATES:	APPROVED:
		CITY ENGINEER DATE

SCALE: NONE
DATE: SEPTEMBER 2019
DRAWN BY: C.G.

W-7A

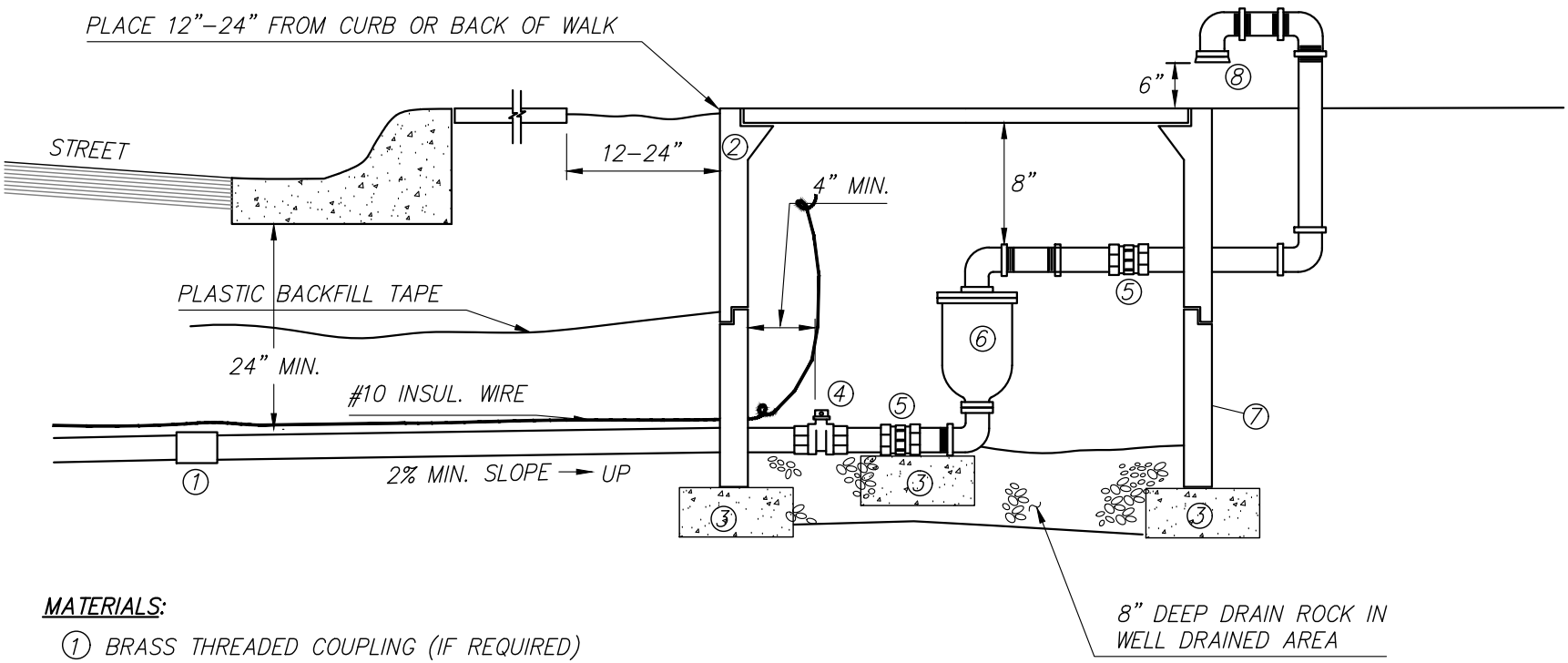

MATERIALS:

1. BRASS THREADED COUPLING (IF REQUIRED)
2. CHRISTY B40 UTILITY BOX OR EQUAL MARKED "COL ARV"
3. CONCRETE BLOCK SUPPORTS
4. CURB STOP – MUELLER B20200 OR EQUAL (F.I.P. x F.I.P.)
5. BRASS UNION
6. COMBINATION AIR / VACUUM VALVE
7. CHRISTY EXTENSION SPOOL (IF NECESSARY) – CHRISTY B40 BOX
8. BRASS CAP WITH 9 DRILLED 1/16" HOLES OR APPROVED EQUAL AND 20 MESH STAINLESS STEEL SCREEN TO VENT OR APPROVED EQUAL.

NOTES:

1. BURIED PIPE AND FITTINGS SHALL BE WRAPPED WITH 8 MIL POYETHYLENE OR APPROVED EQUAL.

CITY OF LINCOLN
ENGINEERING DEPARTMENT

1" AND 2" AIR RELEASE VALVE

REVISIONS:	DATES:	APPROVED:
		CITY ENGINEER DATE

SCALE: NONE
DATE: SEPTEMBER 2019
DRAWN BY: C.G.

W-8

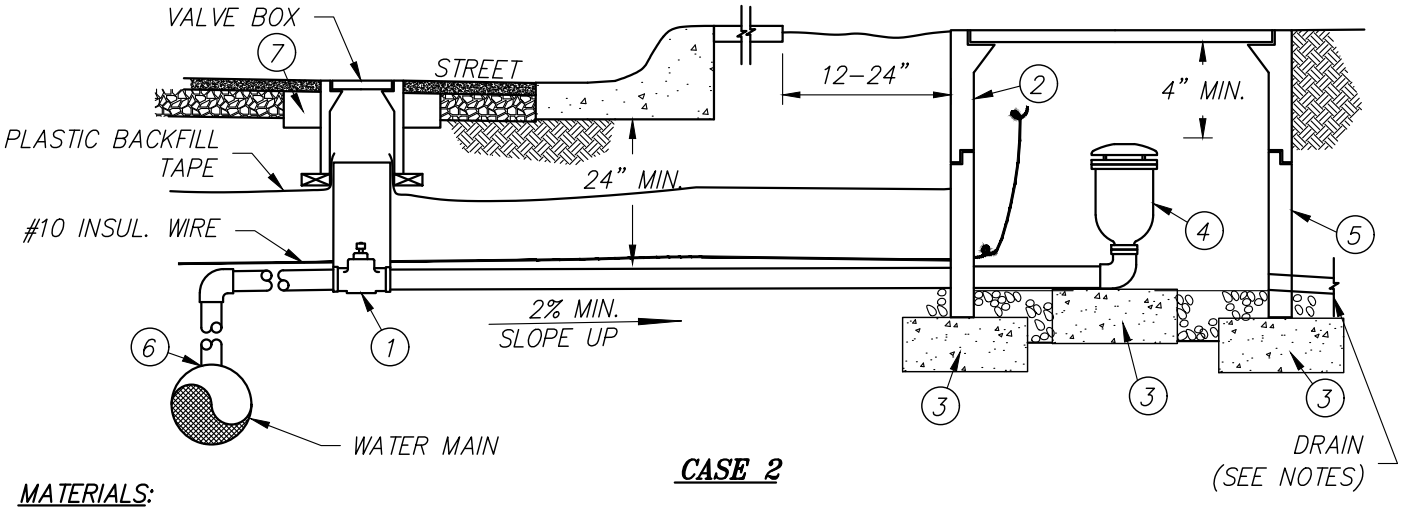

CASE 2

MATERIALS:

1. 4" GATE VALVE
2. CHRISTY B48 UTILITY BOX W/ TRAFFIC COVER OR EQUAL MARKED "COL ARV"
3. CONCRETE BLOCK SUPPORTS
4. COMBINATION AIR / VACUUM VALVE
5. CHRISTY EXTENSION SPOOL (IF NECESSARY) – CHRISTY B48 BOX OR EQUAL AND STEEL LID (MARKED W/ 1" LETTERING "ARV")
6. SEE STD DETAIL W-3 FOR CONNECTION TO WATERMAIN.
7. 6"x6" CONCRETE COLLAR.

NOTES:

1. BURIED PIPE AND FITTINGS SHALL BE WRAPPED WITH 8 MIL POLYETHYLENE OR APPROVED EQUAL.
2. ADD 20 MESH STAINLESS STEEL SCREEN TO VENT
3. CALIFORNIA WATERWORKS STANDARDS, TITLE 22, FOR AIR AND VACUUM RELIEF VALVES STATES:
   - (A) VENT OPENINGS FOR AIR AND VACUUM RELIEF AND AIR RELEASE VALVES SHALL BE:
     - (1) EXTENDED AT LEAST (1) ONE FOOT (0.3m) ABOVE GRADE AND ABOVE MAXIMUM RECORDED HIGH WATER LEVEL. (CASE 1)
     - (2) DOWNWARD FACING AND SCREENED.
   - (B) WHERE THE REQUIREMENTS OF (A)(1) CANNOT BE PRACTICABLY MET, VENT OPENINGS MAY BE LOCATED IN A SUBSURFACE CHAMBER OR PIT (CASE 2) UNDER THE FOLLOWING CONDITIONS:
     - (1) PIT IS ADEQUATELY DRAINED. (METHOD TO BE APPROVED BY THE CITY ENGINEER).
     - (2) THE PIT DRAIN IS NOT CONNECTED BY PIPE OR OTHER CLOSED CONDUIT TO A SEWER OR STORM DRAIN WITHOUT AN AIR SEPARATION.

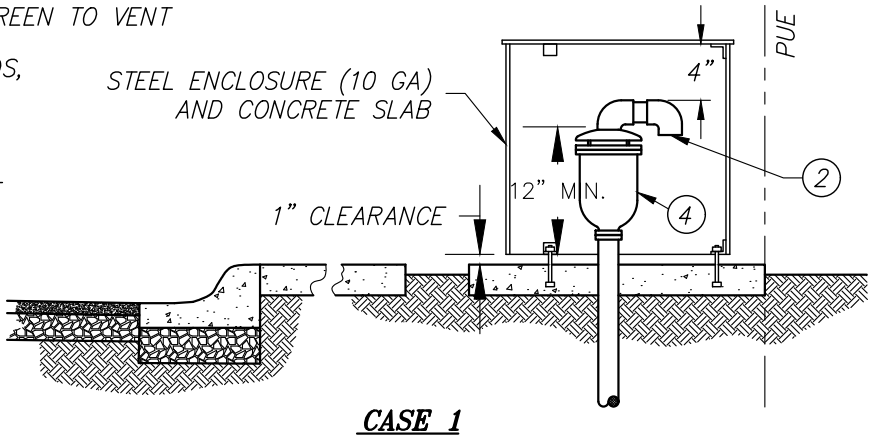

CASE 1

CITY OF LINCOLN
ENGINEERING DEPARTMENT

4" COMBINATION AIR RELEASE VALVE AND VACUUM

REVISIONS:	DATES:	APPROVED:
		CITY ENGINEER DATE

SCALE: NONE
DATE: SEPTEMBER 2019
DRAWN BY: C.G.

W-8A

BOX

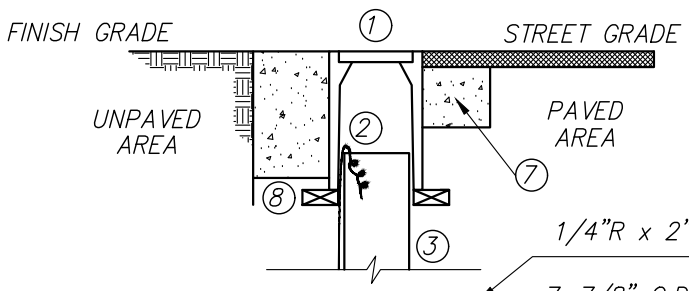

BUTTERFLY VALVE OR GATE VALVE

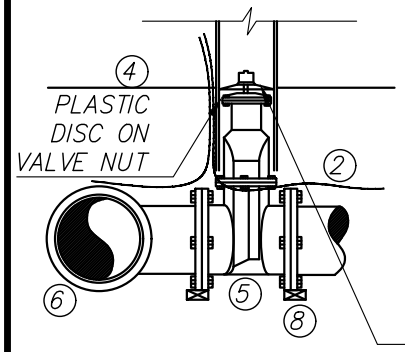

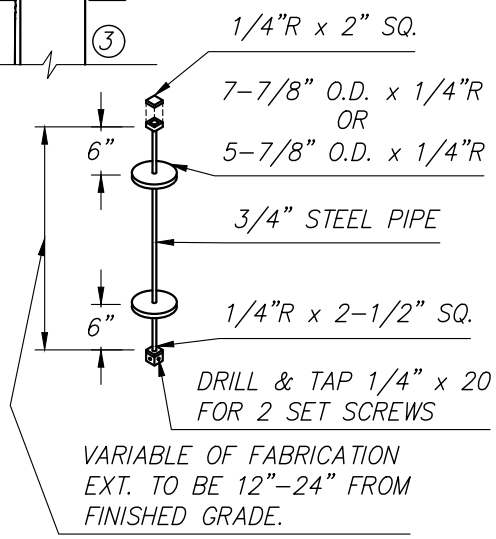

VALVE OPERATING NUT EXTENSION

REQUIRED WHERE VALVE NUT IS IN EXCESS OF 40" DEEP BELOW FINISH GRADE.

NOTES:

1. TRACING WIRE THROUGH VALVE BOXES SHALL BE PLACED OUTSIDE OF RISER BUT INSIDE OF BOX.
2. TRACING WIRE SHALL BE SPLICED INSIDE THE VALVE BOX PER DETAIL BELOW AND SHALL LOOP WITHIN THE VALVE BOX WITH 18" OF SLACK WIRE.
3. ALL GATE AND BUTTERFLY VALVES SHALL BE CENTERED IN A ONE PIECE RISER STOCK AND PLUMB.
4. OPERATOR NUTS DEEPER THAN 36 INCHES FROM FINISH GRADE SHALL REQUIRE A VALVE NUT EXTENSION 2 FEET MINIMUM IN LENGTH.
5. VALVE BOXES LOCATED IN A PAVED AREA SHALL BE PLACED IN A 6"x6" CONCRETE COLLAR. PLACEMENT SHALL BE CONTIGUOUS WITH THE UNDERSIDE OF THE PROPOSED PAVEMENT.
6. VALVE BOXES LOCATED IN AN UNPAVED AREA SHALL BE PLACED IN A 12" DEEP BY 6" WIDE CONCRETE COLLAR. THE COLLAR SHALL BEGIN AT FINISH GRADE.
7. INSTALL CONCRETE BLOCKING UNDER ENTIRE PERIMETER OF BOX.
8. VALVES AND FITTINGS SHALL BE WRAPPED IN 8 MIL POLYETHYLENE.

MATERIALS:

1. CONCRETE VALVE BOX
2. #10 INSULATED TRACING WIRE OUTSIDE RISER
3. 8" RISER STOCK
4. PLASTIC BACKFILL TAPE
5. GATE VALVE FOR 12"≤ AND BUTTERFLY VALVES FOR 16"≥
6. DUCTILE IRON TEE W/ RESTRAINTS
7. CONCRETE COLLAR (SEE NOTES 5 & 6)
8. CONCRETE BLOCKING (SEE NOTES)

WIRE SPLICE NOTES:

1. TWIST THE WIRE A MINIMUM OF (5) TIMES ON EACH END.
2. INSTALL SPLIT BOLT CONNECTOR.
3. COVER THE ENTIRE SPLICE WITH MASTIC TAPE WRAP
4. WRAP MASTIC WITH VINYL TAPE.

* SOLDERING MAY BE INCLUDED IN ADDITION TO THE ABOVE.

TRACING WIRE SPLICE OR EQUAL

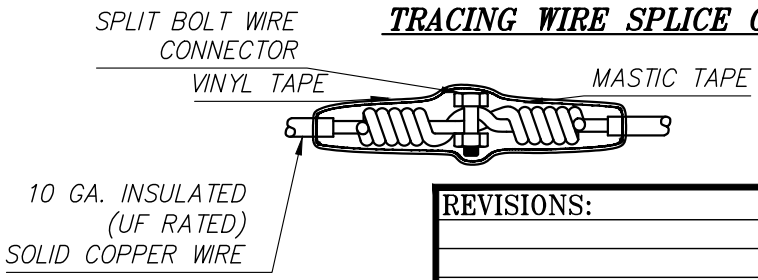

CITY OF LINCOLN
ENGINEERING DEPARTMENT

GATE AND BUTTERFLY VALVE AND BOX

REVISIONS:	DATES:	APPROVED:
		CITY ENGINEER DATE

SCALE: NONE
DATE: SEPTEMBER 2019
DRAWN BY: C.G.

W-9

NOTES:

1. INSTALL CONCRETE BLOCKING UNDER ENTIRE PERIMETER OF VALVE BOX
2. INSTALL #10 INSULATED TRACING WIRE FROM MAIN TO CURB STOP BOX
3. INSTALL SAMPLING STATION DOOR FACING TOWARD STREET
4. SAMPLING STATION TO BE PURCHASED FROM SUPPLIER AND INSTALLED BY CONTRACTOR
5. LOCATION OF SAMPLING STATIONS PER CITY ENGINEER

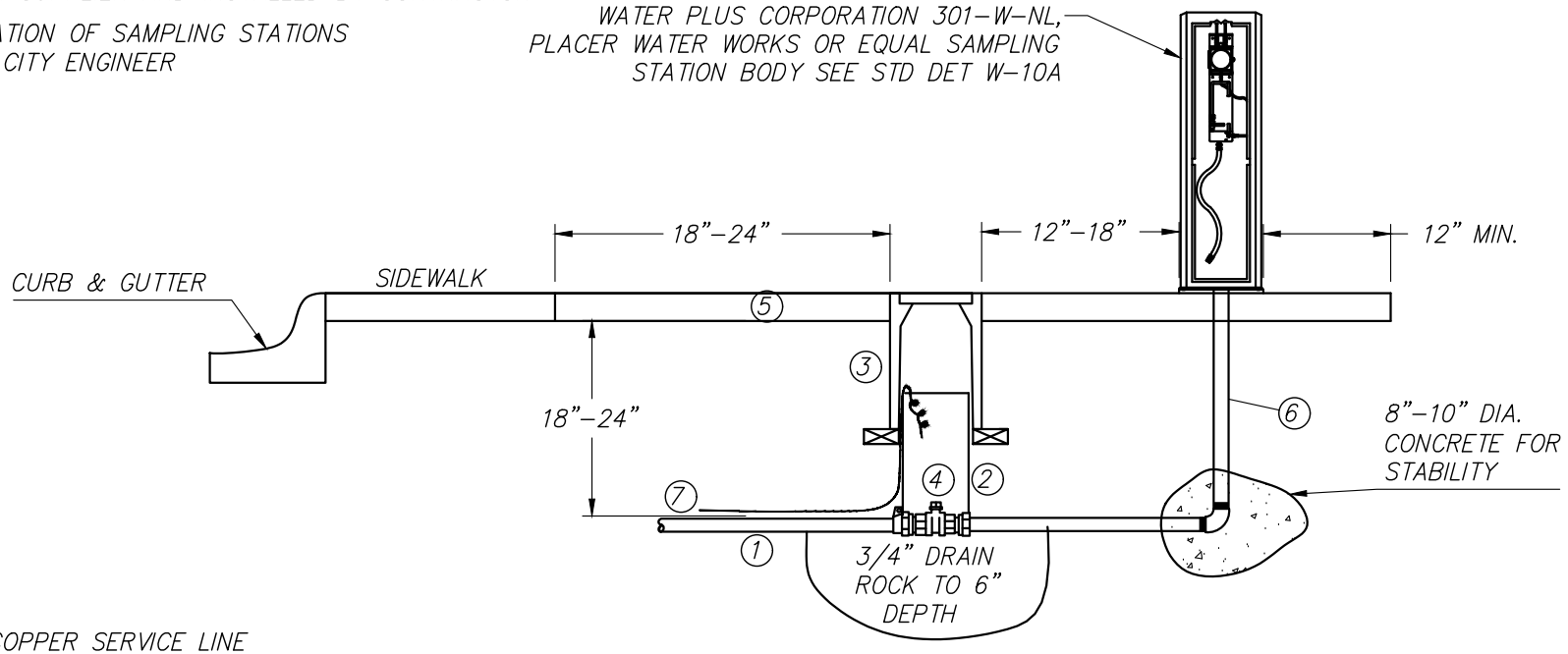

MATERIALS:

1. 3/4" COPPER SERVICE LINE POLYETHYLENE ENCASED.
2. 6" DIAMETER RISER STOCK
3. CHRISTY TRAFFIC BOX WITH METAL LID
4. CURB STOP - MUELLER B-25166 BALL METER VALVE W/ LOCKWING OR EQUAL
5. 3 1/2" THICK REINFORCED CONCRETE SLAB
6. 3/4" BRASS PIPE
7. INSTALL TRACING WIRE FROM MAIN TO CURB STOP WIRE OUTSIDE THE RISER, BUT INSIDE THE BOX.

CITY OF LINCOLN
ENGINEERING DEPARTMENT

SAMPLING STATION WITH PRESSURE RECORDER

REVISIONS:	DATES:	APPROVED:
		CITY ENGINEER DATE

SCALE: NONE
DATE: SEPTEMBER 2019
DRAWN BY: C.G.

W-10

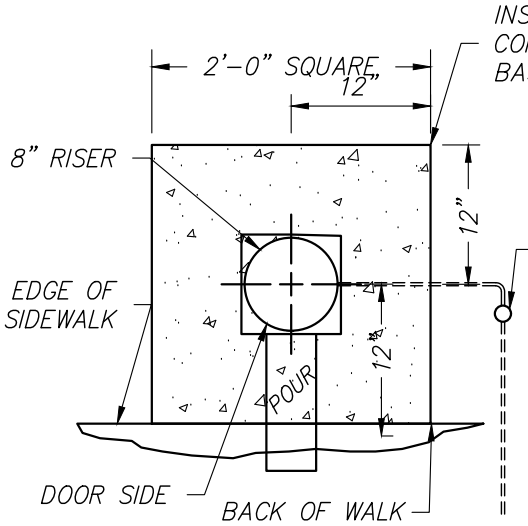

TYPICAL INSTALLATION

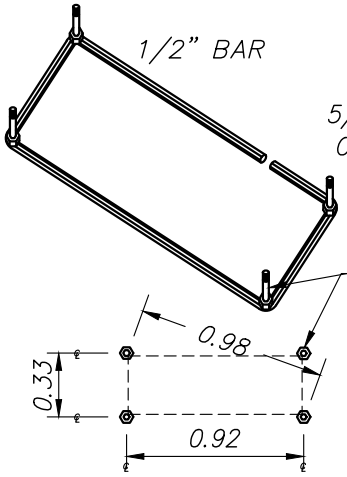

REBAR EMBED

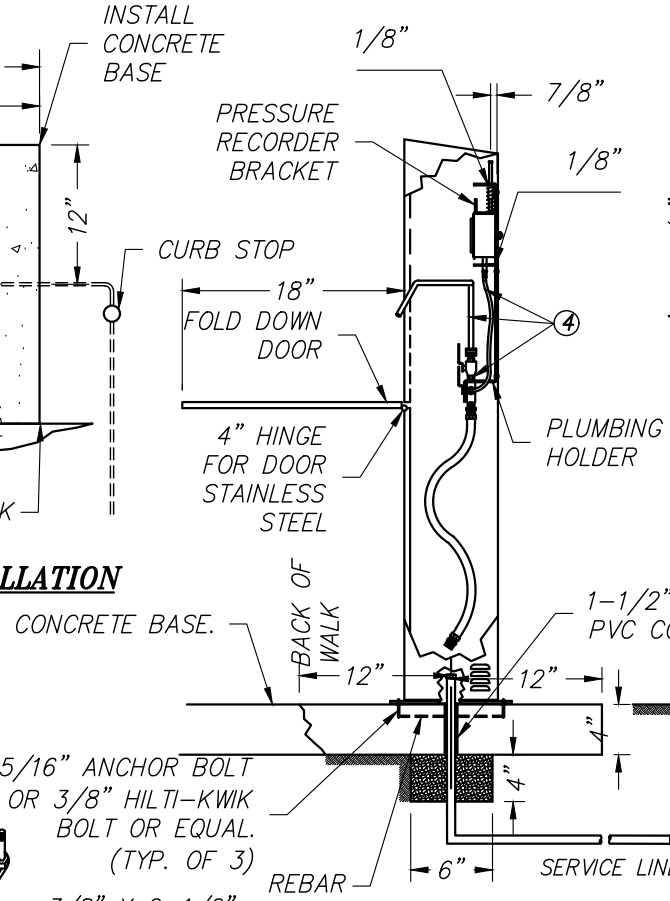

SECTIONAL ELEVATION

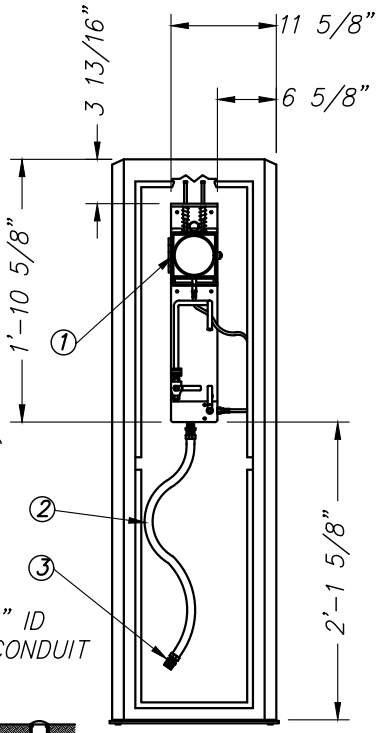

FRONT ELEVATION

NOTES:

1. PLACER WATER WORKS PS/RWS-SS OR EQUAL. ANY MODIFICATIONS TO SPECIFICATIONS SHALL BE APPROVED BY THE WATER DIVISION.
2. ALL CONNECTIONS SHALL BE WRAPPED IN TEFLON TAPE.
3. FOR FULL FRONT ACCESS, LOWER HINGED DOOR TO 45-DEGREE ANGLE THEN LIFT 1-1/2 INCH VERTICALLY TO UNLATCH LOWER DOOR.
4. WHEN SAMPLING, SWIVEL SPIGOT OUT OF CABINET TO PURGE.
5. 3/8" MINIMUM i.d. PLUMBING ALLOWS OVER 6 GALLONS PER MINUTE FLOW.
6. THE SWIVEL FEATURE TOGETHER WITH FOUR SQUARE INCHES OF VENTILATION SURFACE WILL KEEP THE INTERIOR OF CABINET DRY.
7. ALL FOUR LOUVER LOCATIONS PROTECTED WITH STAINLESS STEEL BUG SCREEN.
8. ALL PLUMBING PARTS ARE STAINLESS STEEL EXCEPT THE 3/4 INCH FLEXIBLE COPPER HOOK-UP LINE.
9. THE PRESSURE RECORDER BRACKET ASSEMBLY IS SPRING LOADED FOR EASY DISCONNECTION AND REMOVAL.
10. SECURITY OBTAINED WITH FLUSH MOUNTED KEYED BARRELED LOCK.
11. CABINET BODY MATERIAL - CARBON STEEL.
12. THE CARBON STEEL BODY IS EPOXY PRIMERED WITH DEVRAN 224 hs "BUFF" BY DEVOE. THE INTERIOR FINISH IS DEVTHANE URETHANE EPOXY 379 "SEA HORSE" BY DEVOE. THE EXTERIOR FINISH IS DEVTHANE URETHANE EPOXY 379 "HUNTER GREEN" BY DEVOE.

LEGEND:

1. 4" STEM MOUNTED PRESSURE RECORDER - DICKSON CO. MODEL PW450 7 DAY WITH LIFTING ARM
2. 3/4" COPPER FLEX TUBE
3. 3/4" BRASS CONNECTOR TO SERVICE LINE
4. 3/8" STAINLESS STEEL PLUMBING, BALL VALVES, CONNECTORS AND FLEX TUBING

CITY OF LINCOLN
ENGINEERING DEPARTMENT

WATER SAMPLER WITH PRESSURE RECORDER

REVISIONS:	DATES:	APPROVED:
		CITY ENGINEER DATE

SCALE: NONE
DATE: SEPTEMBER 2019
DRAWN BY: C.G.

W-10A

NOTE: LOCATIONS ARE INDICATED FOR TYPICAL RESIDENTIAL PLACEMENT. IN COMMERCIAL AREAS FIRE HYDRANTS SHALL BE PROTECTED FROM VEHICULAR DAMAGE AND ACCESSIBLE TO FIRE PROTECTION EQUIPMENT AND LOCATIONS TO BE APPROVED BY CITY ENGINEER.

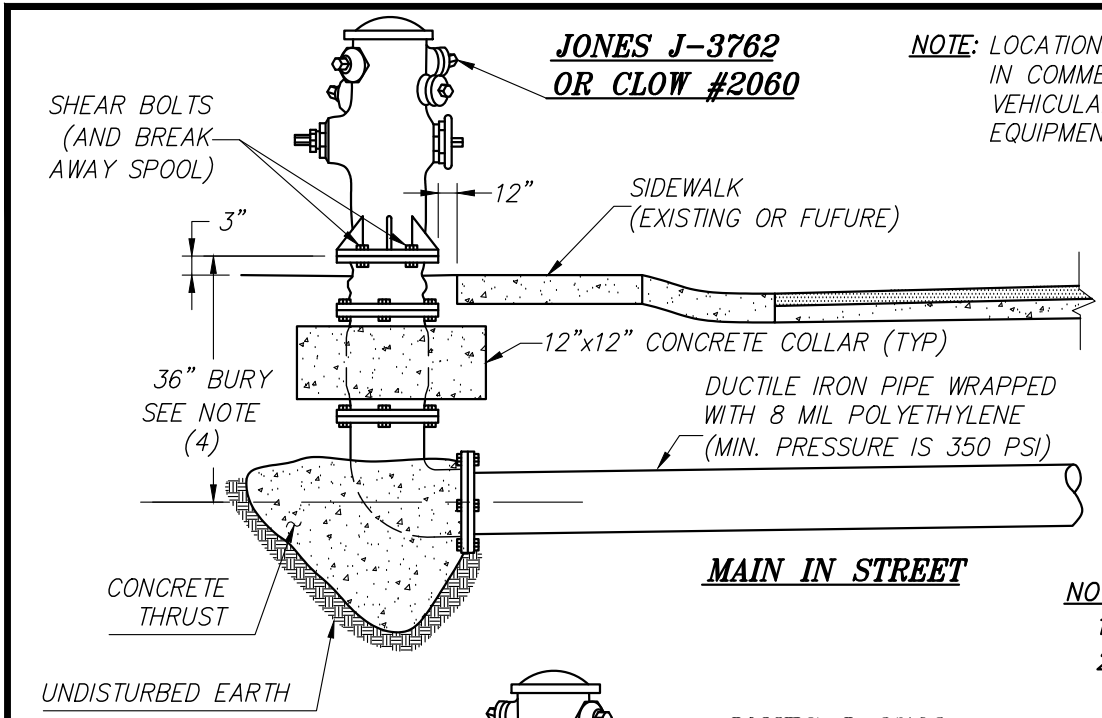

MAIN IN STREET

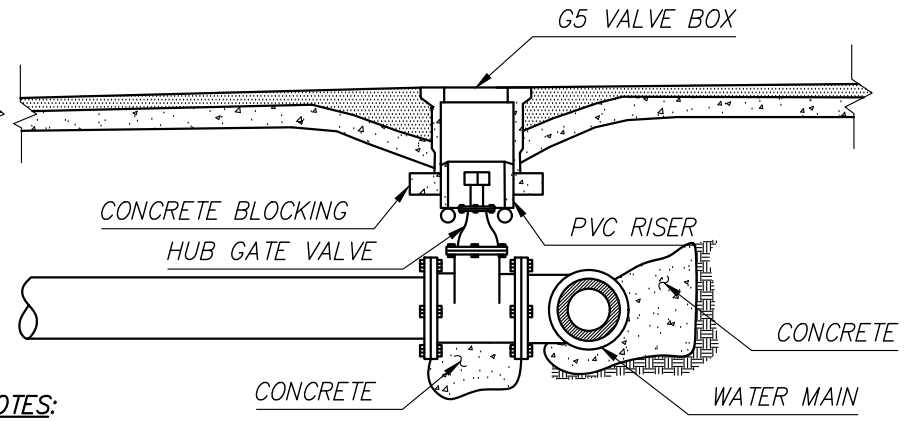

NOTES:

1. VALVE BOX TO BE SET ON CONC. OR BRICK COLLER(TYP).
2. DETAILS SHOWN FOR VALVES ON HYDRANT LATERALS SHALL ALSO APPLY TO VALVES ON MAINS
3. LIST OF APPROVED MATERIALS CAN BE FOUND IN SECTION 4 OF THE STANDARDS (TYPES SHOWN FOR ILLUSTRATION ONLY)
4. BURY LENGTH TO BE 42" WHERE LATERAL TO HYDRANT IS INSTALLED IN SELECT SYSTEM ROADWAY WHICH WILL BE SO SPECIFIED.
5. ALL JOINTS TO BE FLANGED AND OR RESTRAINT AS APPROVED BY CITY ENGINEER.
6. ALL VALVES TO BE WRAPPED W/ 8 MIL POLYETHYLENE
7. HYDRANTS SHALL HAVE: –2 COATS OF SAFETY YELLOW.
   –IRON CAPS (NOT BRONZE OR PLASTIC)
   –TAMPER–PROOF SECURITY BOLT SECURING HYDRANT HEAD TO THE SPOOL.

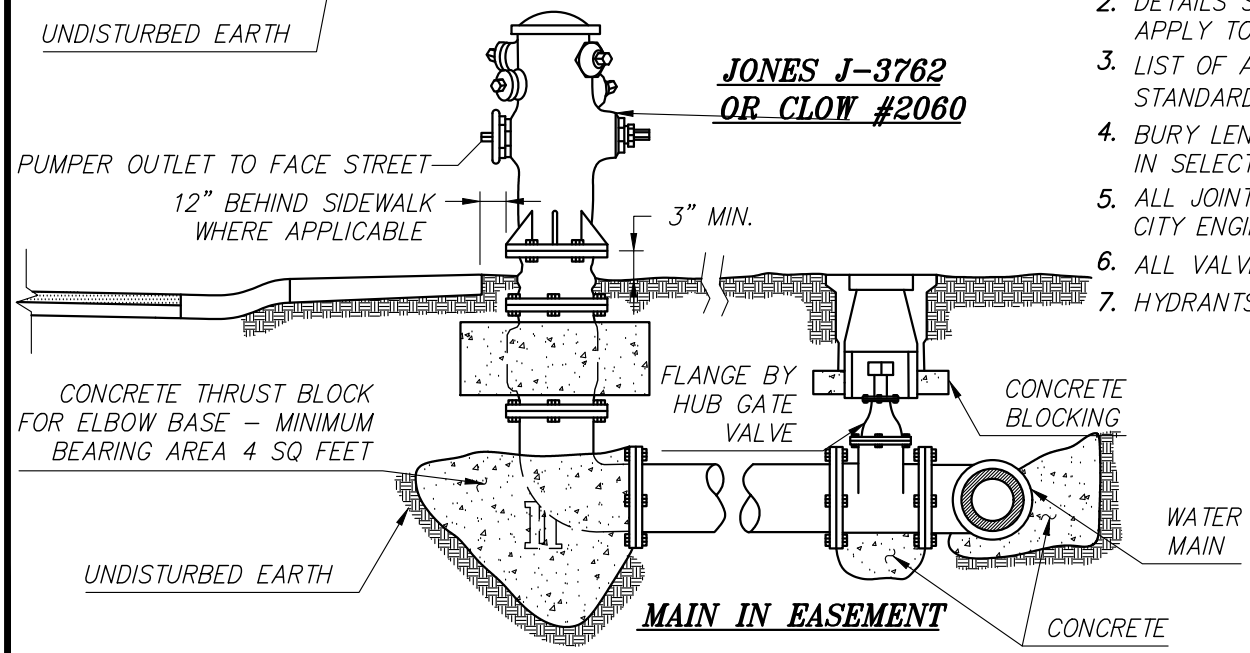

MAIN IN EASEMENT

CITY OF LINCOLN
ENGINEERING DEPARTMENT

FIRE HYDRANT INSTALLATION

REVISIONS:	DATES:	APPROVED:
		CITY ENGINEER DATE

SCALE: NONE
DATE: SEPTEMBER 2019
DRAWN BY: C.G.

W-11

NOTES:

1. NO WATER SHALL BE DRAWN THROUGH THE BACKFLOW DEVICE UNTIL IT HAS BEEN TESTED BY THE CITY.
2. THE BACKFLOW DEVICE SHALL BE INSULATED WITH A CITY APPROVED FREEZE PROTECTION BAG
3. FITTINGS SHALL BE FLANGE BY FLANGE OR RESTRAINED.
4. BURIED NUTS AND BOLTS SHALL HAVE SAP CAPS.
5. BURIED PIPE AND FITTINGS SHALL BE WRAPPED WITH 8 MIL POLYETHYLENE OR APPROVED EQUAL.
6. PIPE AND FITTINGS SHALL BE DUCTILE IRON.

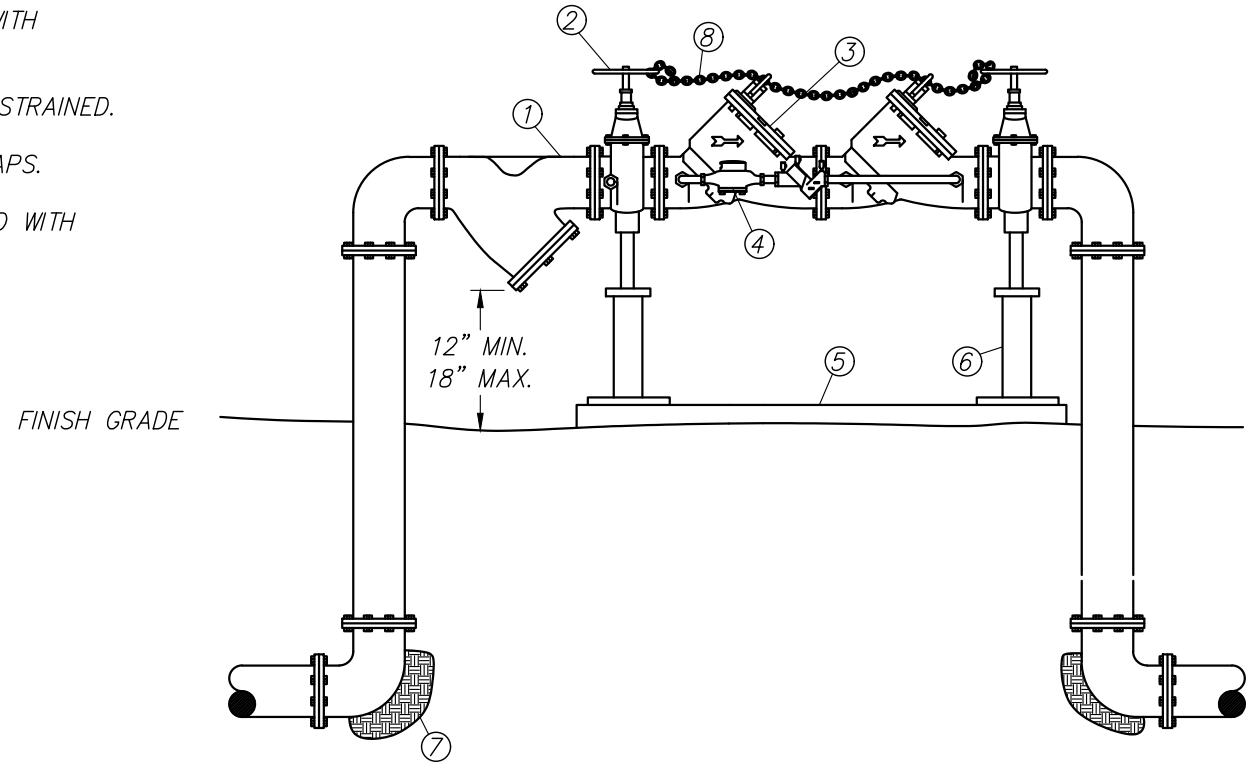

MATERIALS:

1. FLANGED "Y" TYPE STRAINER
2. OS & Y STEAM GATE VALVE (TYP.)
3. DOUBLE DETECTOR CHECK ALL DEVICES TO BE APPROVED BY CITY
4. DETECTOR METER
5. 4" THICK REINFORCED CONCRETE SLAB (CLASS "B" CONCRETE)
6. SUPPORTS 2-TYP. SHALL BE BOLTED DOWN WITH A MINIMUM OF TWO BOLTS EACH
7. THRUST BLOCK (TYP.) DETAIL W-6
8. 1/4" NON CASE HARDENED CHAIN WITH LOCK BETWEEN VALVES

CITY OF LINCOLN
ENGINEERING DEPARTMENT

ONSITE FIRE PROTECTION AND BACKFLOW ASSEMBLY

REVISIONS:	DATES:	APPROVED:
		CITY ENGINEER DATE

SCALE: NONE
DATE: SEPTEMBER 2019
DRAWN BY: C.G.

W-12

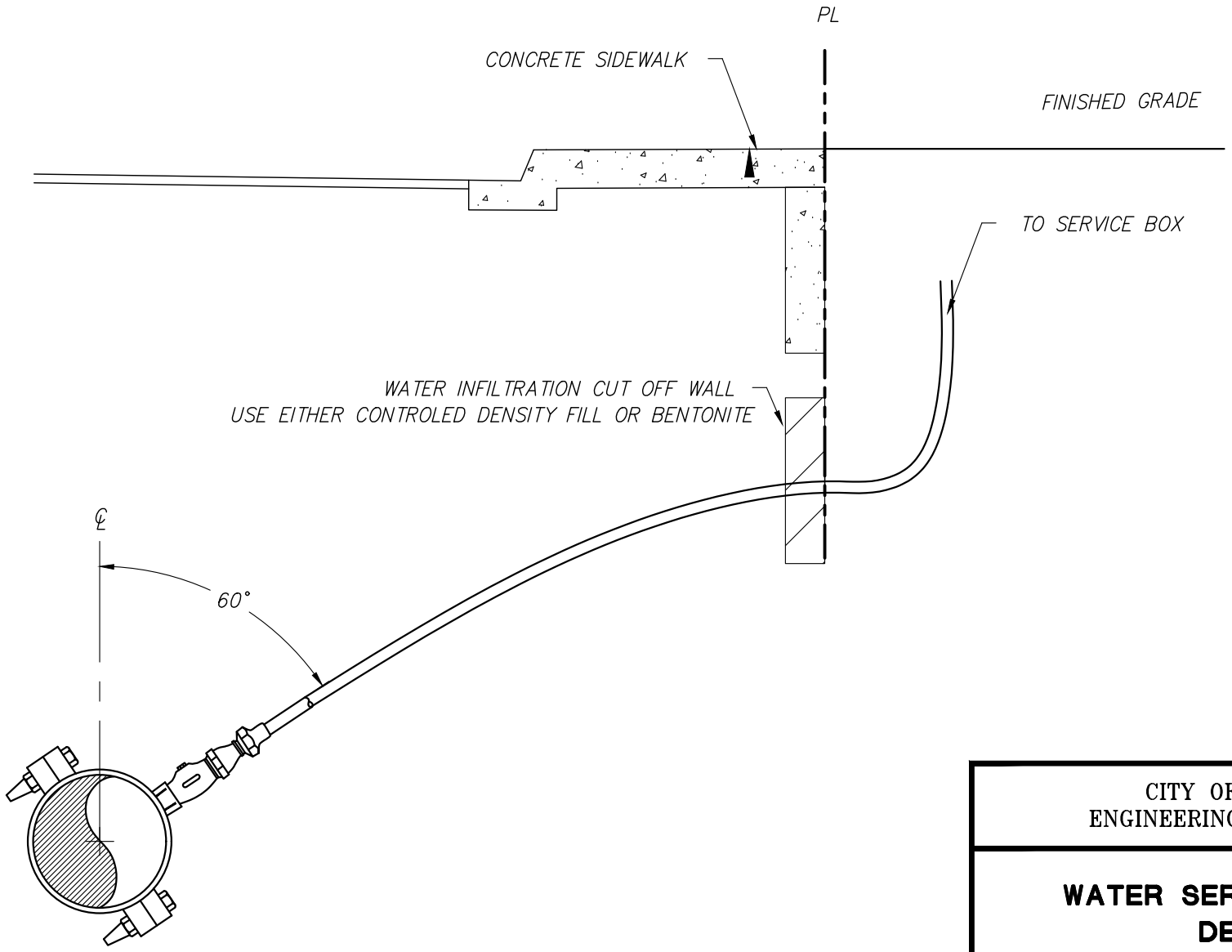

PVC PIPE SADDLE

REVISIONS:	DATES:	APPROVED:
		CITY ENGINEER DATE

CITY OF LINCOLN
ENGINEERING DEPARTMENT

WATER SERVICE CUT OFF DETAIL

SCALE: NONE
DATE: SEPTEMBER 2019
DRAWN BY: C.G.

W-12A

NOTES:

1. REDUCED PRESSURE PRINCIPLE DEVICES (RPP) SHALL BE REQUIRED WHEN ADDITIVES SUCH AS ANTIFREEZE ARE ADDED TO THE FIRE SYSTEM CREATING A HEALTH HAZARD OR AS REQUIRED BY THE CITY ENGINEER.
2. FIRE DEPARTMENT CONNECTIONS SHALL BE 'FM' OR 'UL' LISTED.
3. POST INDICATOR SHALL BE 'FM' OR 'UL' LISTED.
4. MAXIMUM DISTANCE FROM FIRE HYDRANT TO F.D. CONNECTION SHALL BE 150 FEET.
5. ALL FIRE SERVICE PIPING AND APPURTENANCES SHALL BE INSPECTED BOTH BY THE CITY OF LINCOLN ENGINEERING DEPARTMENT AND THE CITY OF LINCOLN FIRE DEPARTMENT.
6. BACKFLOW DEVICES ARE REQUIRED BY STATE OF CALIFORNIA ADMIN. CODE, TITLE 17.
7. ALL VALVES TO BE FITTED WITH FREEZE PROTECTION BAG AS APPROVED BY ENGINEER

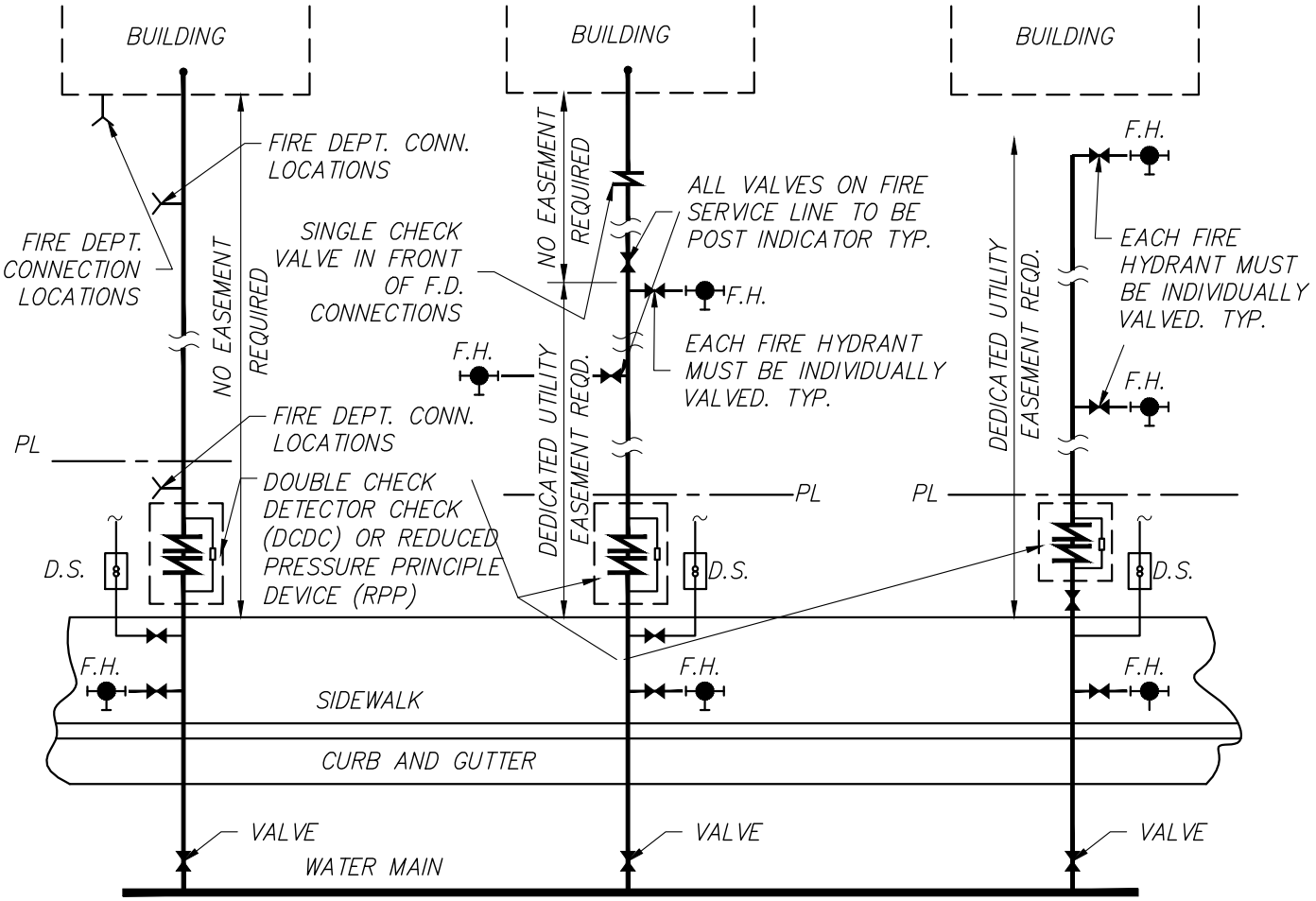

CASE 1
FIRE SERVICE WITH SPRINKLER SYSTEM AND NO HYDRANTS

CASE 2
FIRE SERVICE WITH SPRINKLERS AND HYDRANTS

CASE 1
FIRE SERVICE WITH HYDRANTS ONLY

CITY OF LINCOLN
ENGINEERING DEPARTMENT

TYPICAL FIRE SERVICES

REVISIONS:	DATES:	APPROVED:	SCALE: NONE DATE: SEPTEMBER 2019 DRAWN BY: C.G.	W-13
		CITY ENGINEER DATE		

NOTES:

BACKFLOW CONTROL DEVICES ARE REQUIRED UNDER THE STATE OF CALIFORNIA ADMINISTRATIVE CODE, TITLE 17, AND SHALL BE INSTALLED IN ACCORDANCE THEREOF.

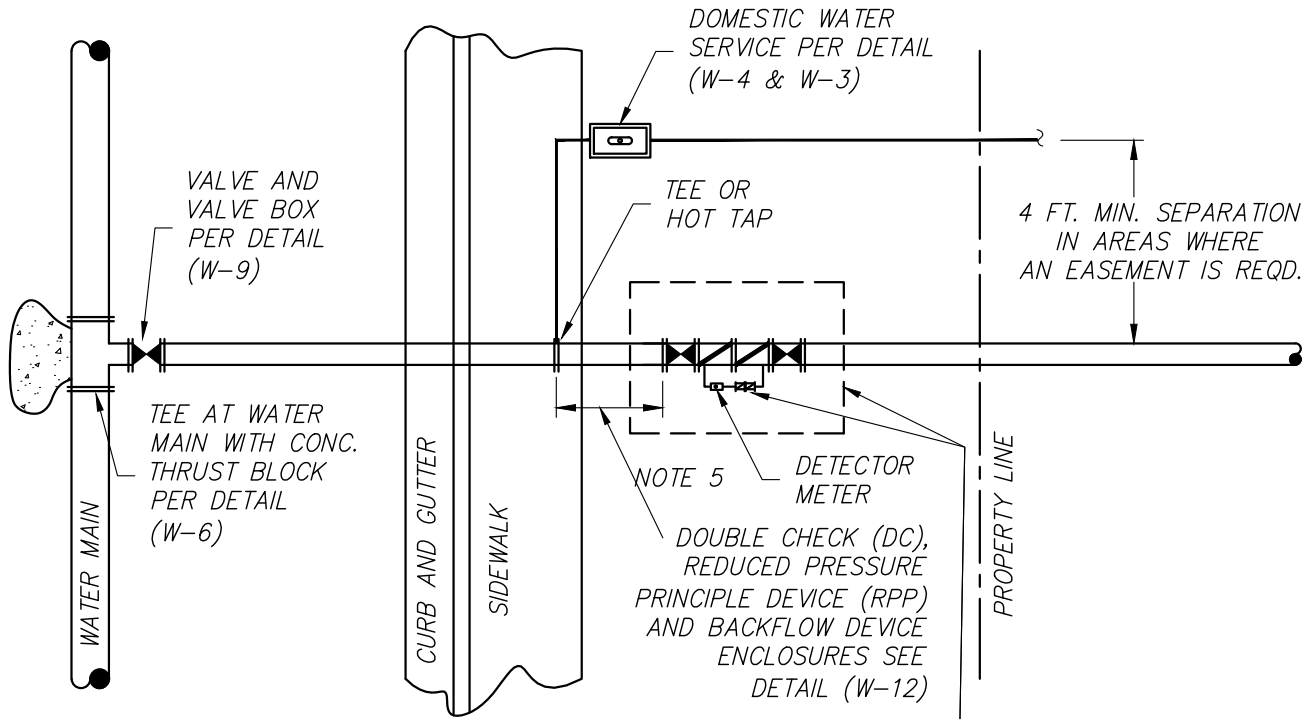

NOTES:

1. ALL CONSTRUCTION SHALL BE IN ACCORDANCE WITH THE CITY OF LINCOLN CONSTRUCTION STANDARDS AND THE SPECIFICATIONS FOR PUBLIC WORKS CONSTRUCTION (GREEN BOOK, LATEST EDITION) AND THE UNIFORM PLUMBING CODE (U.P.C.).
2. ALL LINES BRANCHING FROM FIRE SERVICE SHALL BE VALVED SEPARATELY.
3. DOMESTIC TAPS OF 2" AND SMALLER SHALL BE PER CITY REQUIREMENTS.
4. FOR PIPE REQUIREMENTS SEE MATERIALS LIST.
5. AN AREA OF 12" WIDE ON ALL SIDES OF ENCLOSURE SHALL BE KEEP FREE OF ALL VEGETATIVE OBSTRUCTIONS.
6. DETECTOR METER MUST REGISTER FLOW WHEN TESTED.
7. DOUBLE CHECK OR REDUCED PRESSURE PRINCIPLE DEVICE MUST PASS CERTIFIED BACKFLOW TEST.
8. DEDICATED UTILITY EASEMENT REQUIRED FOR FIRE SERVICE FROM RIGHT-OF-WAY LINE TO ALL FIRE HYDRANTS.
9. DOMESTIC SERVICE SHALL BE INSTALLED IN SEPARATE TRENCH IN ALL AREAS WHERE AN EASEMENT IS REQUIRED.
10. ALL VALVES TO BE WEATHERIZED WITH FREEZE PROTECTION BAG AS APPROVED BY ENGINEER.
11. GATE VALVES TO BE INSTALLED BETWEEN TEE AND BACKFLOW.

CITY OF LINCOLN
ENGINEERING DEPARTMENT

FIRE SERVICES INSTALLATION

REVISIONS:	DATES:	APPROVED:
		CITY ENGINEER DATE

SCALE: NONE
DATE: SEPTEMBER 2019
DRAWN BY: C.G.

W-14

NOTES:

1. NO WATER IS TO BE DRAWN THROUGH THE BACKFLOW DEVICE UNTIL IT HAS BEEN TESTED BY THE CITY OF LINCOLN PUBLIC SERVICES.
2. ALL FITTINGS AND PIPING SHALL BE BRASS.
3. IF USED FOR IRRIGATION DO NOT INCLUDE PRESSURE REGULATOR.
4. INSTALL CONCRETE BLOCKING UNDER ENTIRE PERIMETER OF UTILITY BOX.
5. CONTRACTOR TO LAY 3/4" DRAIN ROCK 12" IN DEPTH UNDER METER SETTER.
6. CONTRACTOR SHALL INSTALL 1/2" CONDUITS 18"–24" DEEP
7. WATER METERS SHALL BE PURCHASED THROUGH THE CITY. PURCHASE INCLUDES INSTALLATION.
8. THE BACKFLOW DEVICE SHALL BE INSULATED WITH A CITY APPROVED FREEZE PROTECTION BAG.
9. BURIED PIPE AND FITTINGS SHALL BE WRAPPED WITH 8 MIL. POLYETHYLENE OR APPROVED EQUAL.

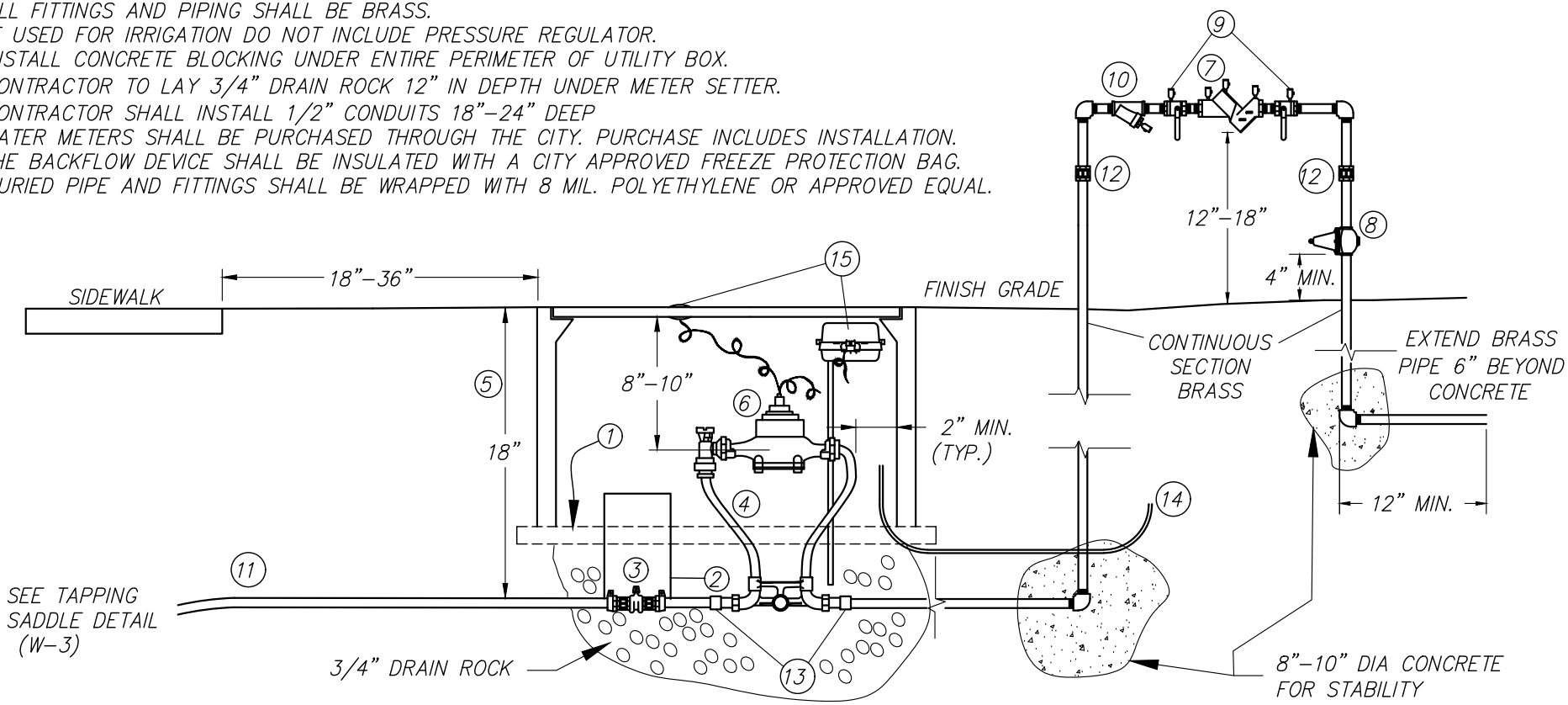

MATERIALS:

1. CONCRETE BLOCKING
2. 6" CONTINUOUS RISER STOCK
3. CURB STOP
4. METER RESETTER
5. B30 UTILITY BOX OR APPROVED EQUAL W/ BOLT DOWN LID
6. METER (PURCHASED THROUGH CITY)
7. R.P. TYPE BACKFLOW DEVICE
8. PRESSURE REGULATOR – ALL BRASS
9. BALL VALVES
10. BRASS STRAINER
11. COPPER PIPE – TYPE K COPPER (SIZE PER PLAN)
12. INSTALL (2) UNIONS NOT CONNECTED TO PRESSURE REGULATOR
13. METER SPUDS
14. 1/2" CONDUIT TO OTHER MANIFOLD BOXES
15. TOUCH PAD AND REMOTE UNIT TO BE PURCHASED BY DEVELOPER AND INSTALLED BY CITY

REVISIONS:	DATES:	APPROVED:
		CITY ENGINEER DATE

CITY OF LINCOLN
ENGINEERING DEPARTMENT

COMMERCIAL 1" SERVICE LINE

SCALE: NONE
DATE: SEPTEMBER 2019
DRAWN BY: C.G.

W-15

NOTES:

1. NO WATER IS TO BE DRAWN THROUGH THE BACKFLOW DEVICE UNTIL IT HAS BEEN TESTED BY THE CITY'S PUBLIC SERVICES.
2. CONTRACTOR SHALL LAY 3/4" DRAIN ROCK 12" DEPTH UNDER METER SETTER.
3. CONTRACTOR SHALL INSTALL 1/2" CONDUITS 18"–24" DEEP
4. WATER METERS SHALL BE PURCHASED THROUGH THE CITY. PURCHASE INCLUDES INSTALLATION.
5. BACKFLOW DEVICE SHALL BE INSULATED WITH A CITY APPROVED FREEZE PROTECTION BAG.
6. INSTALL CONCRETE BLOCKING UNDER ENTIRE PERIMETER OF UTILITY BOXES.
7. CURBSTOP SHALL BE BETWEEN 12" & 18" OF EASEMENT.
8. FITTINGS AND PIPING SHALL BE BRASS.
9. BURIED PIPE AND FITTINGS SHALL BE WRAPPED WITH 8 MIL. POLYETHYLENE OR APPROVED EQUAL.

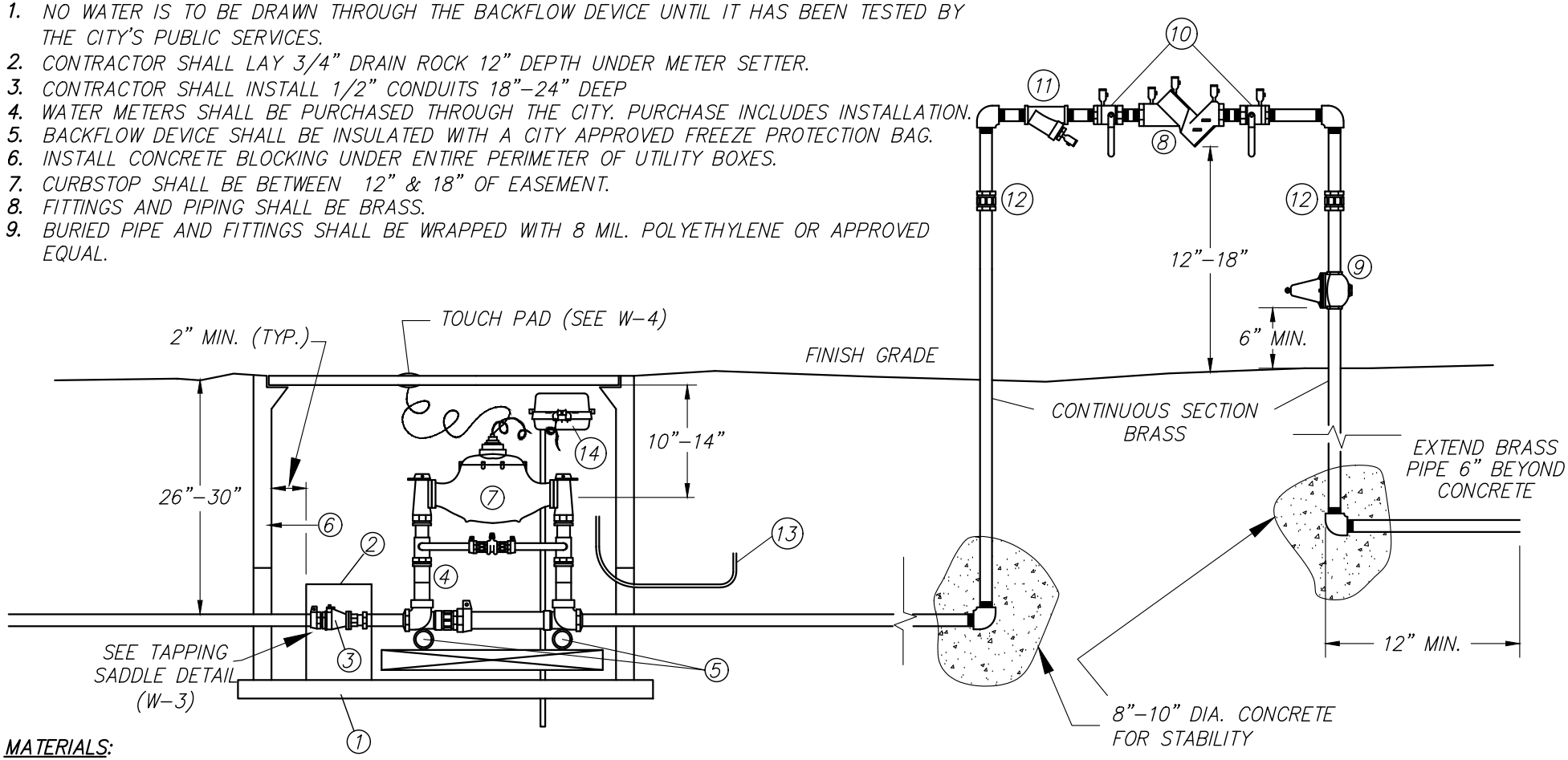

MATERIALS:

1. CONCRETE BLOCKING
2. 6" CONTINUOUS RISER STOCK
3. CURB STOP
4. 18" METER SETTER WITH HIGH BYPASS
5. RIGID SCH. 40 P.V.C. THROUGH EYES
6. B–40 UTILITY BOX W/TRAFFIC LID AND BOLT DOWN
7. METER (PURCHASED THROUGH CITY)
8. R.P TYPE BACKFLOW DEVICE
9. PRESSURE REGULATATOR
10. BALL VALVES
11. "Y" STRAINER
12. INSTALL (2) UNIONS NOT CONNECTED TO REGULATOR
13. 1/2" CONDUIT TO OTHER MANIFOLD BOXES
14. TOUCH PAD AND REMOTE UNIT TO BE PURCHASED BY DEVELOPER AND INSTALLED BY CITY.

CITY OF LINCOLN
ENGINEERING DEPARTMENT

COMMERCIAL 1 1/2" & 2" SERVICE LINE

REVISIONS:	DATES:	APPROVED:
		CITY ENGINEER DATE

SCALE: NONE
DATE: SEPTEMBER 2019
DRAWN BY: C.G.

W-16

NOTES:

1. NO WATER IS TO BE DRAWN THROUGH THE BACKFLOW DEVICE UNTIL IT HAS BEEN TESTED BY THE CITY'S PUBLIC SERVICES.
2. PIPE SHALL BE DUCTILE IRON. (FLANGED)
3. GATE VALVE SHALL BE RESILIENT SEAT.
4. SPOOLS UPSTEAM & DOWNSTREAM OF METER SHALL BE 5x THE PIPE DIAMETER.
5. INSTALL CONCRETE BLOCKING UNDER ENTIRE PERIMETER OF UTILITY BOX.
6. INSTALL 3/8" NON CASE HARDENED CHAIN W/LOCK BETWEEN VALVES.
7. CONTRACTOR SHALL SUPPLY CITY WITH 2 ROMAC GRIP RING CONFIGURATIONS FOR METER BYPASS AT TIME OF FINAL INSPECTION.
8. PIPE AND FITTINGS SHALL BE PURCHASED BY THE DEVELOPER.
9. THE BACKFLOW DEVICE SHALL BE INSULATED WITH A CITY APPROVED FREEZE PROTECTION BAG.

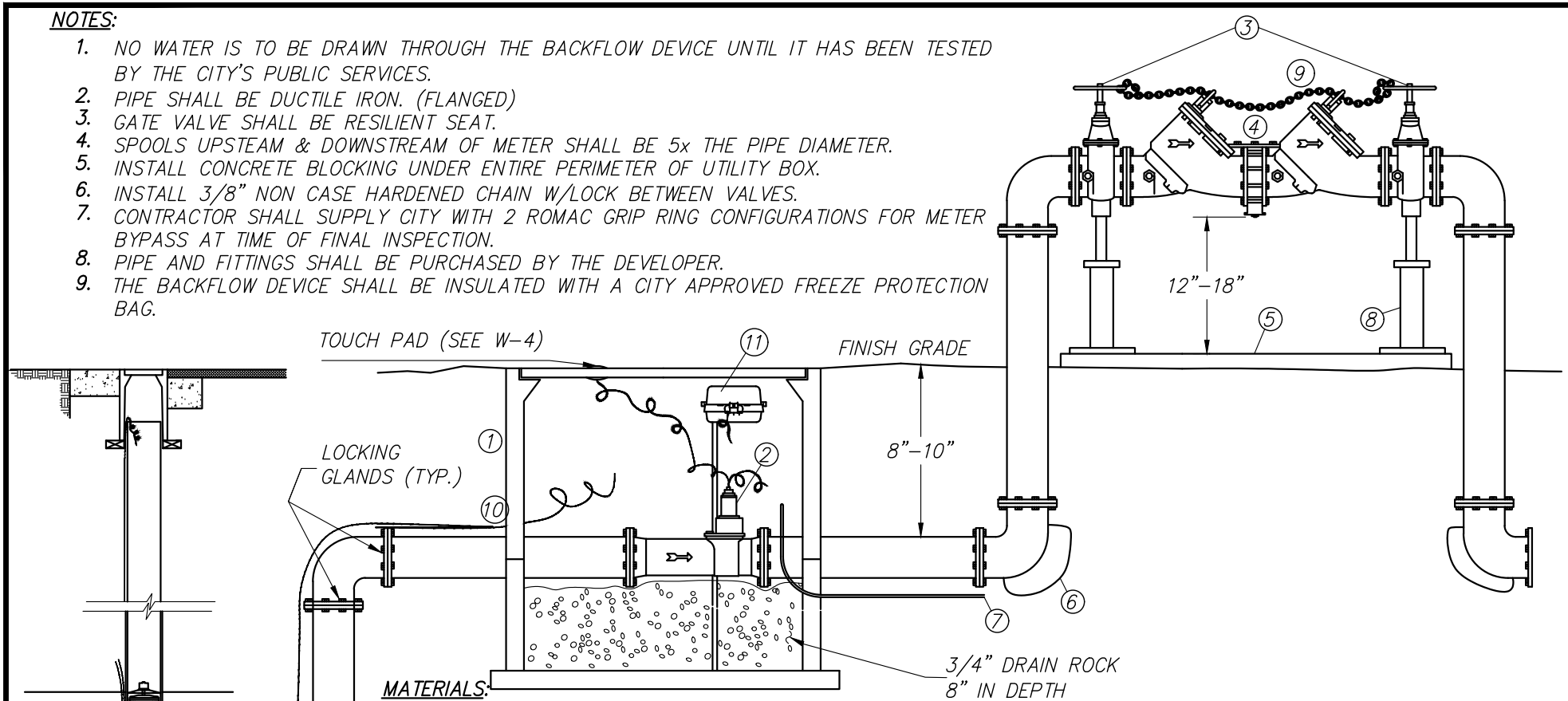

MATERIALS:

1. B40 UTILITY BOX W/STEEL LID OR APPROVED EQUAL - BOLT DOWN LID
2. TURBO METER WITH STRAINER (PURCHASED THROUGH CITY)
3. RESILIENT SEAT GATE VALVES
4. R.P. TYPE BACKFLOW DEVICE
5. 4" THICK REINFORCED CONCRETE SLAB
6. THRUST BLOCK (TYP.)
7. 1/2" CONDUIT TO OTHER MANIFOLD BOXES (OPTIONAL)
8. SUPPORT STANDS BOLTED INTO CONCRETE (TWO BOLTS MINIMUM)
9. 1/4" NON-CASE HARDENED CHAIN WITH LOCK
10. TRACING WIRE
11. REMOTE TRANSMITTER (SEE W-4)

CITY OF LINCOLN
ENGINEERING DEPARTMENT

COMMERCIAL 3" AND LARGER SERVICE

REVISIONS:	DATES:	APPROVED:
		CITY ENGINEER DATE

SCALE: NONE
DATE: SEPTEMBER 2019
DRAWN BY: C.G.

W-17

NOTES:

1. NO WATER IS TO BE DRAWN THROUGH THE BACKFLOW DEVICE UNTIL IT HAS BEEN TESTED BY THE CITY'S PUBLIC SERVICES.
2. CONTRACTOR SHALL LAY 3/4" DRAIN ROCK 12" DEEP UNDER METER SETTER.
3. CONTRACTOR SHALL INSTALL 1/2" CONDUITS 18" TO 24" DEEP.
4. WATER METERS SHALL BE PURCHASED THROUGH CITY. PURCAHSE INCLUDES INSTALLATION.
5. THE BACKFLOW DEVICE SHALL BE INSULATED WITH A CITY APPROVED FREEZE PROTECTION BAG.
6. INSTALL CONCRETE BLOCKING UNDER ENTIRE PERIMETER OF UTILITY BOX.
7. THERE SHALL BE NO FLOW ALTERING DEVICES 5x THE PIPE DIA. UPSTREAM AND DOWNSTREAM OF THE METER.
8. CURBSTOP SHALL BE BETWEEN 12" & 18" OF EASEMENT.
9. FITTINGS AND PIPING SHALL BE BRASS.
   BURIED PIPE & FITTINGS SHALL BE WRAPPED WITH 8 MIL. POLYETHYLENE APPROVED EQUAL.

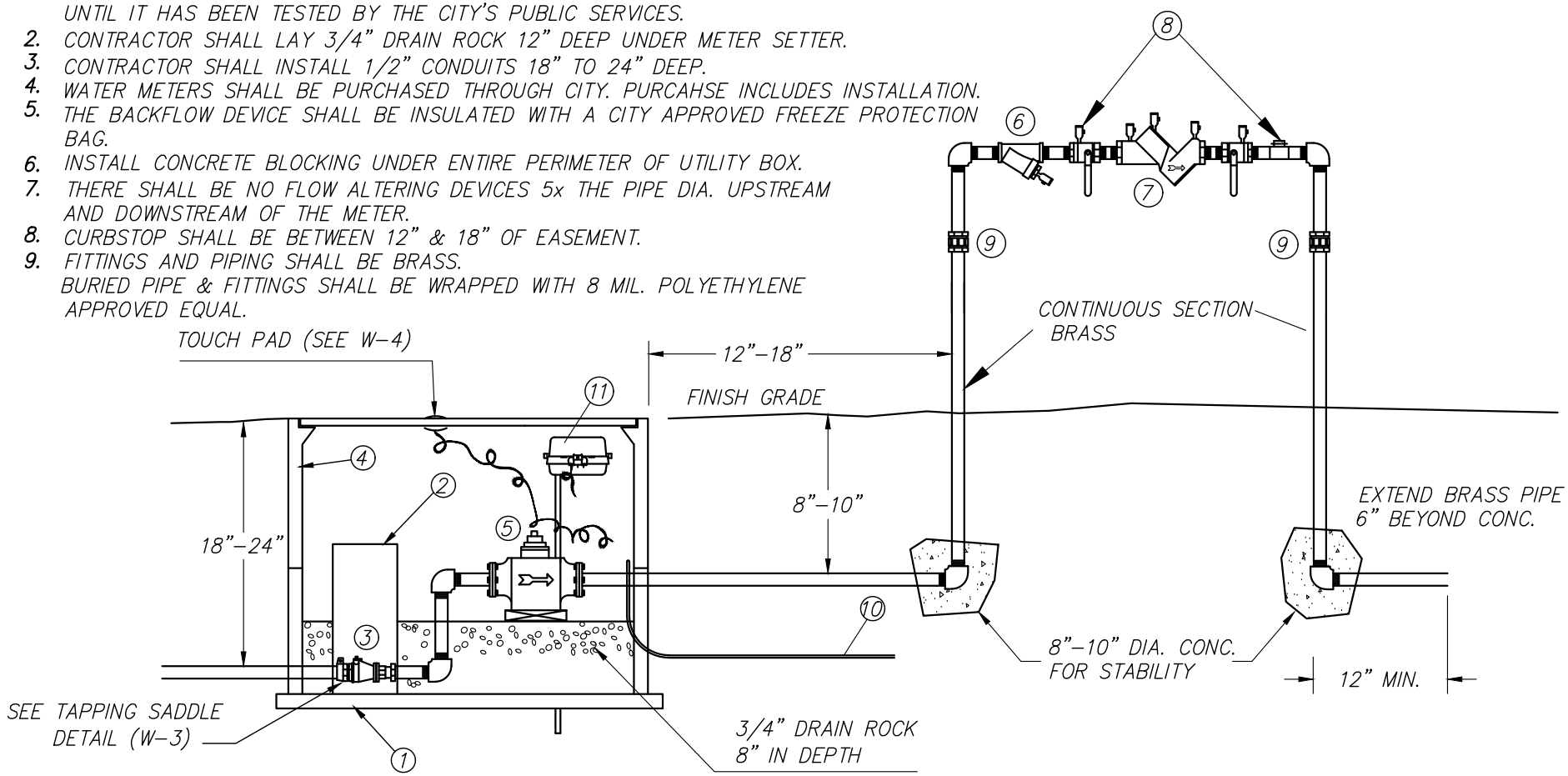

MATERIALS:

1. CONCRETE BLOCKING
2. 6" CONTINUOUS RISER STOCK
3. CURB STOP
4. B-40 UTILITY BOX WITH BOLT DOWN LID.
5. TURBO METER WITH STRAINER (PURCHASED THROUGH CITY)
6. "Y" STRAINER
7. R.P. TYPE BACKFLOW DEVICE
8. BALL VALVES
9. INSTALL (2) UNIONS
10. 1/2" CONDUIT TO OTHER MANIFOLD BOXES (OPTIONAL)
11. REMOTE TRANSMITTER (SEE DETAIL W-4)

CITY OF LINCOLN
ENGINEERING DEPARTMENT

COMMERCIAL 1 1/2" & 2" IRRIGATION SERVICE

REVISIONS:	DATES:	APPROVED:
		CITY ENGINEER DATE

SCALE: NONE
DATE: SEPTEMBER 2019
DRAWN BY: C.G.

W-18

PRIOR TO CONNECTION TO THE CITY MAIN, THE FOLLOWING CONDITIONS SHALL BE MET.

A. PASSED A PRESSURE TEST

B. PASSED A CHLORINE TEST

C. PASSED A BACTI TEST

D. APPROVAL BY THE CITY ENGINEER

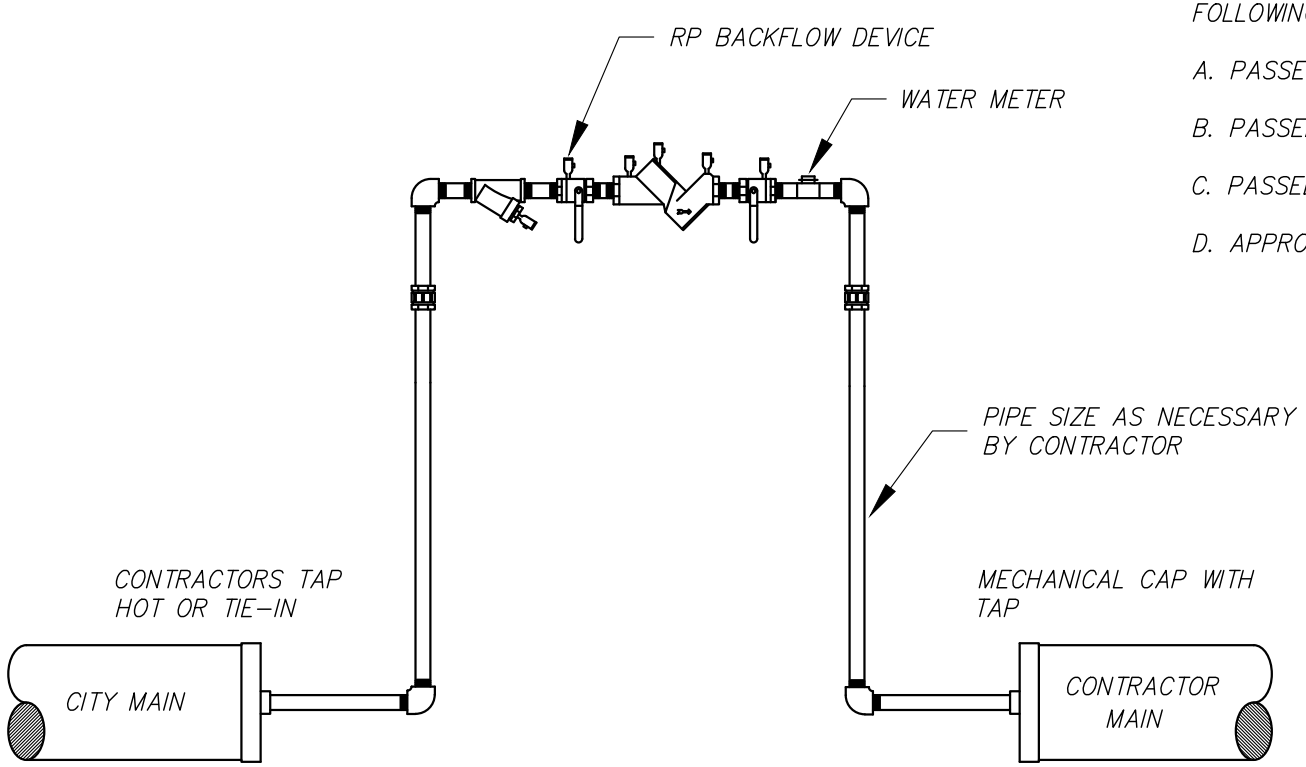

NOTES:

WATER SHALL ONLY BE DRAWN INTO THE CONTRACTORS MAIN THROUGH A CITY APPROVED RP TYPE BACKFLOW DEVICE.

FINAL SYSTEM COMPONENTS NECESSARY FOR TIE-IN SHALL BE PRE-CLORINATED AND PRE-FLUSHED IN THE PRESENCE OF CITY INSPECTOR.

UPON COMPLETION OF THE CONDITIONS NOTED ABOVE THE CONNECTION TO THE CITY SYSTEM MAY BE MADE. THE CITY SHALL BE NOTIFIED 48 HOURS PRIOR TO THE START OF WORK.

CITY OF LINCOLN
ENGINEERING DEPARTMENT

CONSTRUCTION WATER CONNECTION

REVISIONS:	DATES:	APPROVED:
		CITY ENGINEER DATE

SCALE: NONE
DATE: SEPTEMBER 2019
DRAWN BY: C.G.

W-19

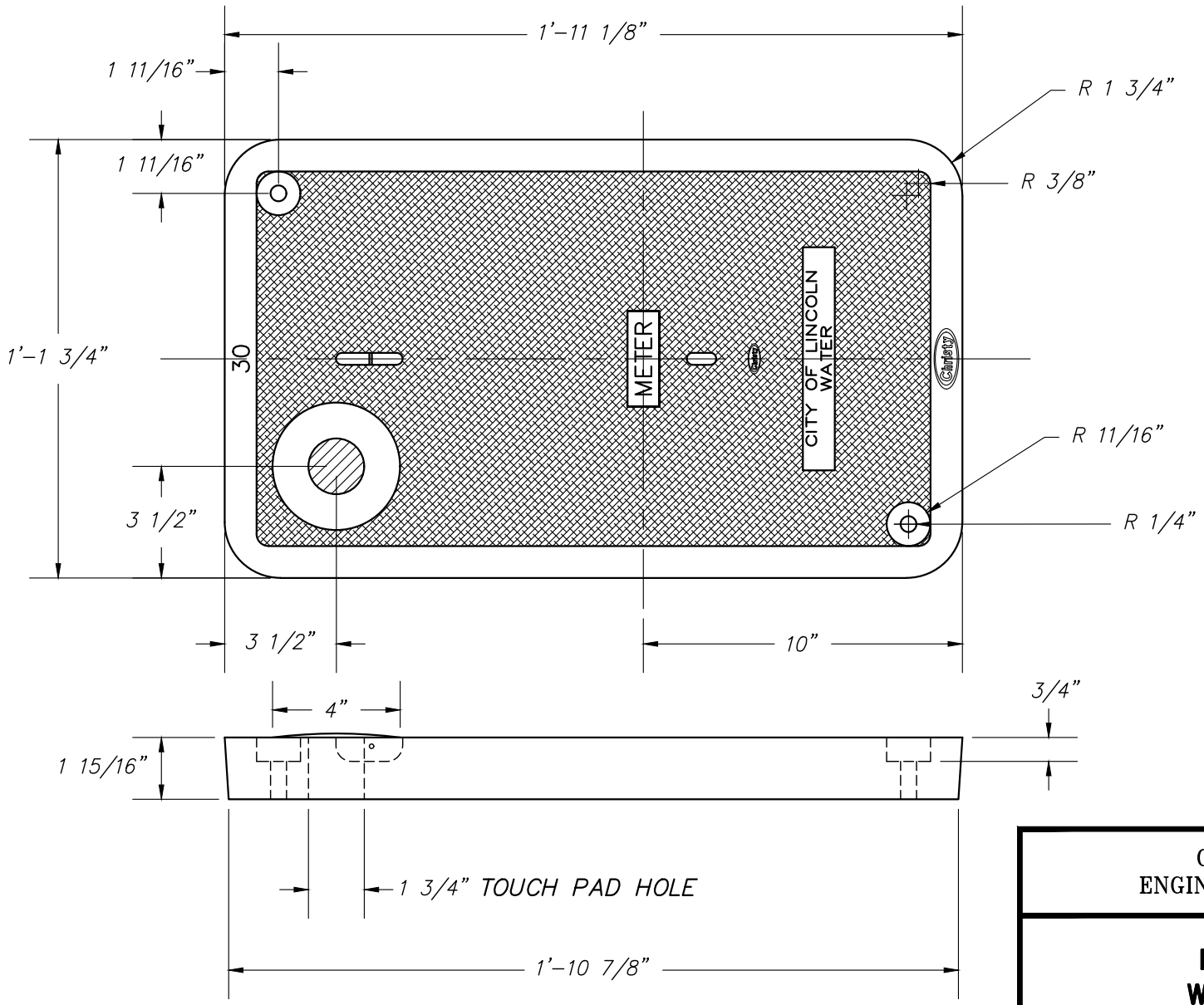

CITY OF LINCOLN
ENGINEERING DEPARTMENT

METER COVER
WATER SERVICE

REVISIONS:	DATES:	APPROVED:
		CITY ENGINEER DATE

SCALE: NONE
DATE: SEPTEMBER 2019
DRAWN BY: C.G.

W-20

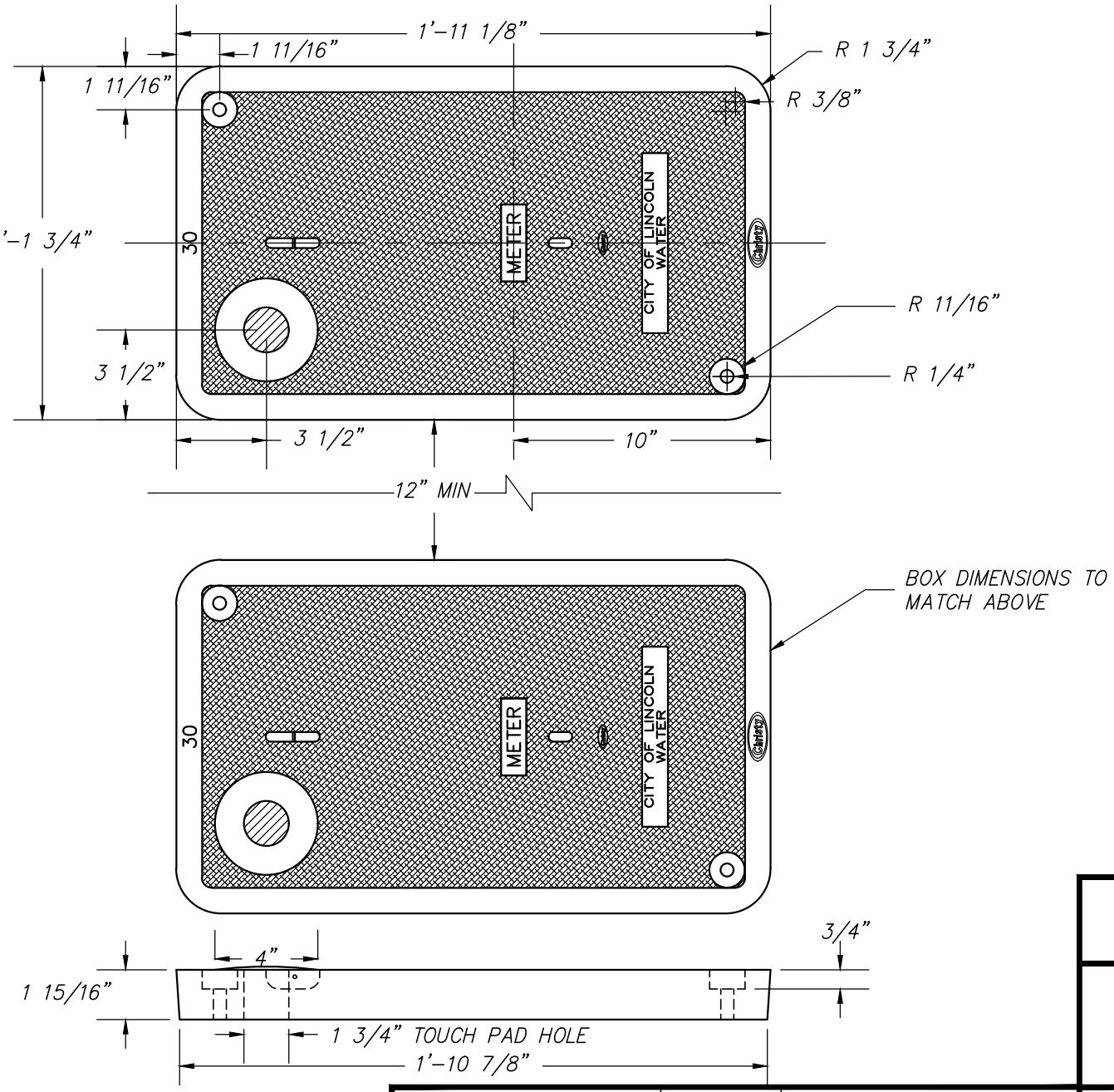

CITY OF LINCOLN
ENGINEERING DEPARTMENT

DOUBLE METER COVER
WATER SERVICE

REVISIONS:	DATES:	APPROVED:
		CITY ENGINEER DATE

SCALE: NONE
DATE: SEPTEMBER 2019
DRAWN BY: C.G.

W-21