CITY OF LINCOLN

PUBLIC FACILITIES IMPROVEMENT STANDARDS

January 2020

[THIS PAGE INTENTIONALLY LEFT BLANK]

CITY OF LINCOLN
PUBLIC FACILITY IMPROVEMENT STANDARDS

TABLE OF CONTENTS

SECTION 1 - PURPOSE, DEFINITIONS AND ABBREVIATIONS (PD)

1-1 Purpose PD-1
1-2 Construction Practice PD-1
1-3 Document Conflicts PD-1
1-4 Materials PD-1
1-5 Definitions PD-1
1-6 Abbreviations PD-6
1-7 City Observed Holidays PD-9

SECTION 2 - CONTRACTOR AND DEVELOPER RESPONSIBILITIES (CD)

2-1 General CD-1
2-2 Developer Responsibilities CD-2
A. Plans, Special Notices, and Permits CD-2
B. Engineering and Improvement Plan Revisions During Construction CD-3
C. Record Drawings CD-3
D. Change in Consulting Engineer/Staking and Design CD-4
E. Inspection and Other Fees CD-4
F. Overtime Inspection Fees CD-4
2-3 Developer/Contractor or Contractor Responsibilities CD-5
A. Plans CD-5
B. As Built Plans CD-5
C. Notification/Preconstruction Meeting CD-5
D. Disposal of Removed Material CD-5
E. U.S.A. Markings CD-5
F. Utility Relocations CD-6
G. Staking CD-6
H. Construction Safety CD-6
I. Materials Approval/Submittals CD-6
J. Maintenance, Remedial Work, and Warranty Repairs CD-7
K. Trenching Permit CD-7
L. Preservation of Property CD-7
M. Preservation of Survey Information CD-7
N. Access CD-7
O. Interruption to Public Parking Areas CD-8
P. Weather CD-8
Q. Storm Water Pollution Prevention Plan (SWPPP)/ Sediment and Erosion Control Measures CD-8

R. Fluid Discharge CD-8
S. Concrete Truck Washout Areas CD-9
T. Dust Control CD-9
U. Working Hours CD-9
V. Cultural Resources CD-10
W. Hazardous Work Materials CD-10
X. Work Zone Traffic Control CD-10
1. Start of Construction CD-11
2. Lane Changes and Closures CD-11
3. Flagpersons CD-11
4. Adjacent Roadway Excavation CD-11
5. Steel Trench Plates CD-11
6. Sidewalk Removal CD-12
Y. Street Cleaning CD-12
Z. Construction Water CD-12
AA. Water Valve Operation CD-12
BB. Pavement Milling Requirements CD-12
CC. Blasting and Explosive Requirements CD-13
DD. Personnel CD-13
EE. Contractor Employee Vehicle Parking CD-13
FF. Trailer and Material Storage CD-13
GG. Oversize and Overweight Permit Loads CD-14
2-4 Contractor Responsibilities CD-14
A. Inspection requirements CD-14
B. Saturday Inspection CD-15
2-5 Minimum Requirement for Model Home Building Permits CD-15
A. Pad Grades CD-15
B. Property Corners CD-15
C. Utilities CD-16
D. Fire Protection CD-16
E. Streets CD-16
2-6 Minimum Requirement for Production Home Building Permits CD-17
A. Roadways CD-17
B. Wet Utilities CD-17
C. Dry Utilities CD-17
D. Lighting CD-17
E. Pad Grades CD-17
F. Property Corners CD-17
G. Storm Water Plan CD-17
H. Signing and Striping CD-17
I. Walls CD-18
J. Recorded Map CD-18
2-7 Requirements for Subdivision Notice of Completion (N.O.C.) CD-18
A. Soundwalls CD-18
B. Temporary Fences CD-18
C. Landscaping CD-18
D. Fees CD-18
E. Pad Certifications CD-18
F. Bond CD-18
G. Record Drawings CD-19
H. Final Inspection CD-19

I. NOC CD-19
2-8 Residential Occupancies During Subdivision Building CD-19
A. Street Cleaning CD-19
B. Debris CD-19
C. Landscape Materials CD-19
D. Barricades CD-19
E. Temporary Fencing CD-19
F. Other Requirements CD-20
2-9 Guarantee and Warranty CD-20
A. Subdivision Improvements & Encroachment Permit Improvements CD-20
1. City's Responsibilities CD-20
2. Final Punch List CD-21
3. Legal Action CD-21
B. Underground Warranty Work within City Street Right-of-Way CD-21
1. Pavement Cutting CD-21
2. Backfill CD-21
3. Patching CD-21
2-10 Contractor and Developer Details CD-21

SECTION 3 - STREETS AND HIGHWAYS (H)

3-1 General H-1
3-2 Connection to Existing Improvements H-2
A. Cuts in Existing Streets H-2
B. Street Widening H-2
C. Existing Stub Street Connection H-3
D. Existing Utility Connection H-3
3-3 Construction Staking H-3
3-4 Utility Relocation H-3
3-5 Trench Work H-4
A. Existing Surface H-4
B. Water in Trench H-5
C. Unsuitable Trench Bottom H-5
D. Open Trench H-5
E. Steel Trench Plates H-6
F. Temporary Surfacing H-6
3-6 Utility Trench Backfill QA/QC H-6
A. Performance Based QA/QC (Non-Testable Materials) H-6
B. Design Based QA/QC (Testable Materials) H-6
C. Trench Backfill Material H-7
Type "A" Material H-7
Type "B" Material H-7
Type "C" Material H-7
Type "D" Material H-7
Type "E" Material H-7
Type "F" Material H-7
D. Pipe Zone Backfill H-8
E. Compaction Test Methods H-8
F. Testing Frequencies H-8

G. Manhole Structure Backfill H-9
3-7 Roadway Construction H-9
A. Pavement Design Methods H-10
B. Wet Weather Construction Extended Warranties H-10
C. Trench Backfill Material H-10
D. Roadway Base H-11
E. Native Soul Subgrade H-11
1. Scarification and Moisture Conditioning H-11
2. Subgrade Treatment H-11
3. Grading H-11
4. Compaction H-12
5. Stability H-12
F. Aggregate Base (AB) H-12
6. Thickness H-13
7. Grading H-13
8. Compaction H-13
9. Stability H-13
G. Concrete Curb, Gutter and Sidewalk H-14
1. Thickness H-14
2. Reinforcing H-14
3. Finishing H-15
4. Sidewalk Access Ramps H-15
5. Expansion joints, deep tool joints and score marks H-15
6. Grades H-16
7. Monolithic Sidewalk, Curb and Gutter H-16
8. Under Sidewalk Drainage Pipe H-16
9. Curb and Gutter Installation In An Existing Street H-16
10. Epoxy Work H-17
11. Median Noses H-17
H. Asphalt Concrete H-17
1. Construction H-17
2. Testing H-18
I. Raising Iron to Finished Grade H-19
J. Final Seal Coat in Residential Area H-20
K. Crack and Joint Sealing H-21
L. Sound and Retaining Walls and Graffiti Coating H-21
M. Street Barricades H-21
N. Street Signs H-21
O. Street Sign Posts H-21
P. Survey Monuments H-22
3-8 Traffic Stripes and Pavement Markings H-23
A. Removal of Existing H-23
B. Application H-23
C. Thermoplastic Material H-23
D. Pavement Markers H-24
3-9 Materials H-25
A. Aggregate Base H-25
B. Asphalt Concrete H-26
C. Concrete H-26
D. Concrete Additives H-26
E. Lime H-26

F. Truncated Domes H-27
G. Expansion Joint Filler H-27
H. Graffiti/Anti-Graffiti H-27
I. Filter Fabric H-27
J. Pavement Reinforcing Fabric H-27
K. Controlled Density Fill H-27
L. Sign Posts/metal H-28
M. Pavement Markers H-28
N. Seal Coast H-28
O. Asphalt Surface Crack and Joint Sealant H-28
P. Thermoplastic Stripes and Pavement Markings H-28
3-10 Streets and Highways Details H-29

SECTION 4 - DOMESTIC WATER SUPPLY SYSTEM (W)

4-1 General W-1
4-2 Connection to Existing Facilities W-2
A. Plans, Special Notices, and Permits W-2
B. Engineering and Improvement Plan Revisions During Construction W-3
4-3 Construction Staking W-3
4-4 Trench Work W-4
A. Existing Pavement W-4
B. Water in Trench W-4
C. Unsuitable Trench Bottom W-5
D. Open Trench W-5
E. Steel Trench Plates W-5
4-5 Pipe Installation W-5
A. Manufacturers Recommendations W-6
B. Pipe Cleanliness W-6
C. Cathodic Protection W-6
D. Placing Pipe W-6
E. Joining Pipe W-6
F. Covering Pipe W-6
G. Tracing Wire W-6
H. Pipe Restraints and Fittings W-6
I. Pipe Protection W-7
J. Polyvinyl Chloride (PVC) Pressure Pipe Installation W-7
K. Ductile Iron Pipe (DIP) W-7
L. Transitions W-8
M. Borings W-8
4-6 Service Installation W-9
A. Service Runs W-9
B. Saddles W-9
C. Service Manifolds W-9
D. Telemetering W-10
E. Backflow Assembly W-10
F. Curb Marking W-10
G. Double Meter Service W-10
4-7 Service Abandonment W-10
4-8 Mainline Abandonment W-10

4-9 Appurtenances Installation W-10
A. Pipe Protection W-10
B. Gate Valves W-10
C. Bolt and Nut Protection W-11
D. Pressure Reducing Station W-11
E. Fire Hydrant Bolts W-11
F. Marking Fire Hydrants W-11
G. Fire Hydrant Paint W-11
H. Dead Lines W-11
I. Insulation W-11
4-10 Concrete Cradles, Arches, & Encasements W-11
4-11 Pipe Backfill QA/QC W-12
A. Performance Based QA/QC (Non-Testable Materials) W-12
B. Design Based QA/QC (Non-Testable Materials) W-13
C. Trench Backfill Material W-13
D. Pipe Zone Backfill W-14
E. Compaction Test Methods W-14
F. Testing Frequencies W-14
G. Marking W-15
H. Marking in Unpaved Areas W-15
4-12 Testing Procedures W-15
A. Pressure Test W-15
B. Chlorine Disinfection W-16
C. Water Quality Testing W-17
D. Tying into the City System W-18
E. Continuity Testing W-18
4-13 Repairing Installed Improvements W-18
A. Pipe Replacement W-18
B. Backfill W-18
C. Pipe Protection W-18
4-14 Punch List Process W-18
4-15 Materials W-18
A. Approved Equal W-18
1. Product W-19
2. Contact W-19
3. Reference W-19
B. Unapproved Materials W-19
C. Water Main W-19
1. PVC Pressure Pipe W-19
2. Ductile Iron Pipe W-19
D. Services W-20
1. Copper Tubing W-20
2. Brass Material W-20
a. Brass Pipe W-20
b. Brass Fittings W-20
c. Brass Fittings for Copper Tubing W-20
3. Corporation Stops W-20
4. Curb Stops W-21
5. Dielectric Tape W-21
6. Service Saddles W-21
E. Appurtenances W-22

1. Air Release Valves W-22
2. Backflow Assembly W-22
3. Blocking for Boxes Assembly W-23
4. Blow Off W-23
5. Fittings W-23
a. PVC Pipe W-23
b. Ductile Iron Pipe W-23
6. Freeze Protection for Backflow Assemblies W-24
7. Gaskets W-24
8. Hydrants W-24
9. Hydrant Bury W-24
10. Hydrant Bury Extensions W-24
11. Hydrant Check Valves W-25
12. Location Stakes W-25
13. Mainline Valve Lock-Out W-25
14. Manhole Frame and Cover W-25
15. Meters W-25
16. Meter Idlers W-25
17. Meter Setters W-25
18. Meter Spud Couplers W-25
19. Nuts and Bolts W-26
20. Nylon Bushings W-26
21. Patching Material W-26
22. Polyethylene Encasement W-26
23. Pressure Regulators W-26
24. Restraints W-27
25. Riser Stock W-27
26. Sampling Stations W-27
27. Sap Seal W-27
28. Service Boxes and Lids W-27
29. Silicone W-27
30. Telemetering Conduit W-27
31. Tracing Wire W-28
32. Tracing Wire Connectors W-28
33. Tracing Wire Mastic Tape Seal W-28
34. Valves W-28
35. Valves Boxes W-28
36. Water Pipe Marking Tape W-28
37. Zinc Caps W-28
4-16 Domestic Water System Details W-29

SECTION 5 - SANITARY SEWER SYSTEMS (SS)

5-1 General SS-1
5-2 Connection to Existing Facilities SS-2
A. System Tap SS-2
B. Existing Sewer Stubs SS-2
5-3 Construction Staking SS-3
5-4 Trench Work SS-3
A. Existing Pavement SS-3

B. Water in Trench SS-3
C. Unsuitable Trench Bottom SS-4
D. Steel Trench Plates SS-4
E. Temporary Resurfacing SS-5
F. Open Trench SS-5
G. Trench Width SS-5
5-5 Pipe Bedding SS-5
A. Pipe Support SS-5
B. Saturated Trench SS-5
C. Bell Holes SS-5
5-6 Concrete Cradles, Arches, & Encasements SS-6
A. Pipe Support SS-6
B. Concrete SS-6
5-7 Pipe Installation SS-6
A. Pipe Cleanliness SS-6
B. Placing Pipe SS-6
C. Joining Pipe SS-6
D. Covering Pipe SS-6
E. Manufacturer's Recommendations SS-6
F. Vitrified Clay Pipe (VCP) Installation SS-7
G. Polyvinyl Chloride (PVC) Installation SS-7
H. High Density Polyethylene (HDPE) Installation SS-7
I. Transitions between VCP and PVC or HDPE SS-7
J. Boring SS-7
1. Excavations SS-7
2. Installation of Conductor SS-7
3. Placing Pipe in Conductor SS-8
4. Backfill of Voids SS-8
5. Ground Loss SS-8
5-8 Force Main Installation SS-8
A. Force Main Standards SS-8
B. Force Main Pipe SS-9
5-9 Manhole Installation SS-9
A. Top of Manhole in Pavement SS-9
B. Top of Manhole Off-Site SS-9
C. Top of Manhole Landscape Area SS-9
D. VCP Entering Manhole SS-9
E. Lids SS-9
F. Existing SS-10
G. Bases SS-10
H. Adjusting Manholes SS-10
I. Joints SS-10
J. Ladder Steps SS-11
K. Epoxy Manholes SS-11
L. Metering Manhole SS-12
1. Packaged Manhole SS-12
M. Manhole Structure Backfill SS-12
5-10 Lateral Installation SS-13
5-11 Pipe Backfill QA/QC SS-13
A. Performance Based QA/QC (Non-Testable Materials) SS-13
B. Design Based QA/QC (Testable Materials) SS-14

C. Trench Backfill Material SS-14
D. Pipe Zone Backfill SS-15
E. Compaction Test Methods SS-15
F. Testing Frequencies SS-15
G. Warning Tape SS-16
H. Marking in Unpaved Areas SS-16
I. Steel Plates SS-16
J. Temporary SS-16
5-12 Testing of Installed Improvements SS-16
A. Sewer Mains and Services SS-16
1. Air Pressure Test SS-17
2. Closed Circuit TV Inspection SS-17
B. Manholes SS-18
5-13 Punch List Process SS-18
5-14 Repairing Installed Improvements SS-19
A. Repairing Vitrified Clay Pipe SS-19
5-15 Materials SS-19
A. Approved Equal SS-19
1. Product SS-19
2. Contact SS-19
3. Reference SS-19
B. Unapproved Materials SS-20
C. Backfill Material SS-20
D. Sewer Main and Service Laterals SS-20
E. Cleanout SS-20
F. Manholes SS-20
1. Barrels, Cones and Lids SS-20
a. 48-inch Manhole Material SS-20
b. 60-inch Manhole Material SS-20
c. 72-inch Manhole Material SS-20
2. Manhole Frame and Cover SS-21
3. Precast Manhole Base SS-21
G. Appurtenances SS-21
1. Air Release Valve SS-21
2. Clay to Concrete Sealant SS-21
3. Cleanout Caps SS-21
4. Couplings SS-21
5. Flange Gaskets SS-21
6. Joint Sealing Compound SS-21
7. Locations Stakes SS-21
8. Mortar SS-21
9. Silicone SS-21
10. Sulfide Protection SS-21
11. Wastewater Marking Tape SS-21
12. Parshall Flumes SS-21
5-16 Sanitary Sewer System Details SS-22

SECTION 6 - STORM DRAINAGE (SD)

6-1 General SD-1

6-2 Construction Staking SD-2
6-3 Channel Lining Installation SD-2
A. Surface Preparation SD-2
B. Reinforcement SD-2
C. Construction Joints SD-2
D. Expansion Joints SD-2
E. Contraction Joints SD-3
F. Weep Holes SD-3
G. Cutoff Walls SD-3
H. Finishing SD-3
I. Curing SD-3
6-4 Catch Basin Installation SD-4
A. Backfill SD-4
B. Compaction SD-4
6-5 Manhole Installation SD-5
A. Bases SD-5
1. Precast SD-5
2. Cast-in-Place SD-5
B. Cones SD-5
C. Joints SD-6
1. Mortar Application SD-6
2. Plastic Sealing Compound Application SD-6
D. Connections SD-6
E. Grade Rings SD-6
F. Top of Manhole In Pavement SD-6
G. Top of Manhole Off-Site SD-6
H. Top of Manhole in Landscaped Area SD-6
I. Adjusting Existing Manhole Frames SD-7
J. Manhole Structure Backfill SD-7
6-6 Trench Work SD-7
A. Existing Pavement SD-8
B. Water in Trench SD-8
C. Unsuitable Trench Bottom SD-9
D. Unsuitable Trench Bottom SD-9
E. Temporary Surfacing SD-9
F. Open Trench SD-9
G. Trench Width SD-10
6-7 Pipe Bedding SD-10
A. Pipe Support SD-10
B. Shovel Slicing SD-10
C. Bell Holes SD-10
6-8 Concrete Cradles, Arches & Encasements SD-10
A. Pipe Support SD-10
B. Concrete SD-10
6-9 Pipe Installation SD-10
A. Manufacturers Recommendations SD-10
B. Pipe Layout Tolerances SD-11
C. Placing Pipe SD-11
D. Joining Pipe SD-11
E. Covering Pipe SD-11
F. Reinforced Concrete Pipe SD-11

G. Laying and Backfill of Polyvinyl Chloride (PVC) and High-Density Polyethylene (HDPE) Pipe SD-11
H. Closed Circuit Television Inspections (CCTV) SD-12
6-10 Pipe Backfill QA/QC SD-13
A. Performance Based QA/QC (Non-Testable Materials) SD-13
B. Design Based QA/QC (Testable Materials) SD-13
C. Trench Backfill Materials SD-14
D. Pipe Zone Backfill SD-15
E. Compaction test Methods SD-15
F. Testing Frequencies SD-15
G. Warning Tape SD-16
H. Markings in Unpaved Areas SD-16
6-11 Materials SD-16
A. Backfill Materials SD-16
B. Catch Basins SD-16
C. Alternative PVC Catch Basins SD-16
D. Lined Channels SD-17
1. Air Blown Mortar SD-17
2. Concrete SD-17
3. Curing Compound SD-17
4. Expansion Joint Filler SD-17
5. Grouted Cobbles SD-17
6. Weep Holes SD-17
7. Welded Wire Fabric SD-17
E. Manholes SD-17
1. Bases SD-17
2. Cones SD-17
3. Joints SD-17
4. Manhole Frames and Covers SD-17
5. Mortar SD-18
6. Pipe Connections SD-18
F. Outlet and Inlet Structures SD-18
G. Slurry Cement Backfill SD-18
H. Storm Drain Pipe SD-18
1. Acrylonitrile-Butadiene-Styrene (ABS) SD-18
2. High Density Polyethylene Pipe (HDPE) SD-18
3. Polyvinyl Chloride Pipe (PVC) SD-19
4. Precast Reinforced Concrete Pipe (RCP) SD-19
5. Alternate Pipe Materials SD-19
6-12 Storm Drainage Details SD-20

SECTION 7 - GRADING (G)

7-1 General G-1
7-2 Clearing and Grubbing G-2
A. Vegetation and Debris G-2
B. Disposal G-2
7-3 Construction Staking G-2
A. Channel G-2
B. Storm Water Prevention Plan (SWPPP)/Sediment and Erosion Control Measures G-3

C. Pads G-3
D. Retaining and Sound Walls G-3
E. Roadways G-3
7-4 Construction Requirements G-3
A. Channels G-3
B. Storm Water Pollution Prevention Plan (SWPPP)/Sediment and Erosion Control Measures G-3
1. Seeding and Soil Stabilization G-3
2. Construction Water G-4
3. Water Valve Operation G-4
C. Pads G-4
D. Retaining Walls G-4
1. Concrete/Masonry Walls G-4
2. Wood Retaining Walls G-4
E. Roadways G-4
1. Compaction G-4
2. Grade Control G-4
3. Stability Testing G-4
4. Unsuitable Materials G-5
F. Grading Around Trees and Protected Areas G-5
1. Fencing G-5
2. Grade Changes G-5
3. Native Ground Surface Fabric G-5
4. Preservation Devices G-5
5. Retaining Walls G-5
6. Roots G-6
a. Minor Roots G-6
b. Major Roots G-6
7. Trenching G-6
7-5 Materials G-6
A. Dust Palliative G-6
B. Retaining Walls G-6
1. Concrete/Masonry Walls G-6
2. Wood Retaining Walls G-6
C. Tree Fencing G-6
1. Signs G-6
7-6 Grading Details G-7

SECTION 8 - LANDSCAPING AND IRRIGATION (LSC)

8-1 General LSC-1
8-2 Preservation of Property LSC-2
8-3 Personnel LSC-2
8-4 Weather LSC-2
8-5 Irrigation Installation LSC-2
A. Trenching LSC-2
B. Backfill LSC-3
C. Control Wiring LSC-3
D. Irrigation Controller LSC-4
E. Central Control Specifications LSC-4

1. Conduits LSC-4
2. Conductors LSC-4
3. Satellite Assembly LSC-5
F. PVC/Brass Pipe LSC-5
G. Sprinkler Heads LSC-6
H. Valves LSC-7
I. Valve Boxes LSC-7
J. Water Service and Meter LSC-7
8-6 Irrigation Testing LSC-7
A. Service Lines and Irrigation Main LSC-7
B. Leak Repair LSC-8
C. Electrical System LSC-8
8-7 Planting Installation LSC-8
A. Soil Preparation LSC-8
B. Soil Conditioning LSC-8
C. Fine Grading LSC-8
D. Tree, Shrub and Ground Cover Planting LSC-9
1. Locations LSC-9
2. Pit Digging LSC-9
3. Root Balls LSC-9
4. Planting plants LSC-9
5. Planting trees LSC-9
6. Fertilizers & Herbicides LSC-10
7. Supporting trees LSC-10
E. Seeding LSC-10
1. Preparation LSC-10
2. Application LSC-10
3. Protection LSC-10
F. Sod Planting LSC-10
1. Application LSC-10
2. Rolling LSC-11
3. Maintenance LSC-11
8-8 Irrigation Materials LSC-11
A. Approved Equal LSC-11
1. Product LSC-11
2. Contact LSC-11
3. Reference LSC-11
B. Unapproved Materials LSC-11
C. Backflow Prevention Device LSC-11
D. Electrical LSC-11
1. Control Wire LSC-11
2. Pull Box Covers LSC-12
3. Service Unit and Meter Socket LSC-12
4. PVC Conduit LSC-12
E. Irrigation Controller LSC-12
F. Pipes and Fittings LSC-13
1. Mains LSC-13
2. Service Laterals LSC-14
G. PVC Pipe Cements LSC-14
1. Primer LSC-14
2. Cement LSC-14

H. Sprinkler Heads LSC-14
I. Sprinkler Risers LSC-14
J. Valves and Valve Boxes LSC-14
1. Remote Control Valves LSC-14
2. Gate Valves LSC-15
3. Quick Coupling Valves LSC-15
4. Valve Boxes LSC-15
8-9 Planting Material LSC-15
A. Backfill LSC-15
B. Fertilizer LSC-15
1. Turf and Planting Areas LSC-15
2. Planting Holes LSC-15
C. Herbicide LSC-15
D. Imported Topsoil LSC-16
E. Mulch LSC-16
F. Plant Stock and Ground Cover LSC-16
G. Seed LSC-17
H. Soil Amendment LSC-17
I. Tree Stakes and Ties LSC-17
1. Tree Stakes LSC-17
2. Tree Ties LSC-17
3. Earth Anchors LSC-17
8-10 Maintenance Period LSC-18
A. Preliminary Inspection LSC-18
B. Maintenance Period LSC-18
C. Overall Maintenance Requirements LSC-18
D. Watering LSC-18
E. Lawn Maintenance LSC-18
F. Plants LSC-19
G. Weeding and Grading LSC-19
8-11 Cleaning Up LSC-19
8-12 Final Inspection and Acceptance LSC-19
A. Timing LSC-19
B. Review LSC-19
C. Corrective Work LSC-19
1. Turf LSC-19
2. Plants LSC-19
3. Irrigation LSC-19
D. Final Acceptance LSC-19
8-13 Guarantee LSC-20
A. Plants LSC-20
B. Irrigation LSC-20
8-14 Landscaping and Irrigation Details LSC-21

SECTION 9 - STREET LIGHTING, SIGNALS AND ELECTRICAL SYSTEMS (SL)

9-1 General SL-1
9-2 Traffic Signals SL-1
9-3 Maintaining Existing & Temporary Electrical Systems SL-1
9-4 Foundations SL-2

9-5 Standards, Steel Pedestals and Posts SL-2
9-6 Conduit Material SL-2
9-7 Conduit Installation SL-2
9-8 Pull Boxes SL-2
9-9 Conductors SL-3
9-10 Bonding and Grounding SL-3
9-11 Testing SL-4
9-12 Ground SL-4
9-13 Functional Testing SL-4
9-14 Emergency Vehicle Preemption Equipment SL-4
9-15 Vehicle Signal Faces SL-4
9-16 Signal Sections SL-5
9-17 Vehicle Detectors SL-5
9-18 Pedestrian Push Button Assemblies SL-6
9-19 Light Emitting Diode (LED) Luminaires SL-7
9-20 Removing Electrical Equipment SL-7
9-21 Battery Backup System SL-7
9-22 Street Lighting SL-8
9-23 Conduit Installation SL-8
9-24 Luminaires SL-8
9-25 Service SL-9
9-26 Pull Boxes SL-9
9-27 Conductors SL-9
9-28 Photoelectric Conduits SL-10
9-29 Conduit SL-10
9-30 Electrical Equipment and Work SL-10
9-31 Foundations SL-10
9-32 Poles SL-10
A. Galvanized Steel Poles SL-10
B. Aluminum Poles/Concrete Poles SL-10
9-33 Wiring SL-10
9-34 Fuses SL-11
9-35 Service SL-11
9-36 Painting SL-11
9-37 Cleanup SL-12
9-38 Acceptance Test SL-12
9-39 Street Lighting, Signals and Electrical Systems Details SL-13

SECTION 10 - RECYCLED WATER SYSTEMS (RW)

10-1 General RW-1
10-2 Connection to Existing Improvements RW-2
10-3 Construction Staking RW-3
10-4 Trench Work RW-3
A. Existing Pavement RW-3
B. Water in Trench RW-4
C. Unsuitable Trench Bottom RW-4
D. Open Trench RW-5
E. Steel Trench Plates RW-5

F. Temporary RW-5
G. Pipe Support RW-5
H. Trench Width RW-5
I. Excess Material RW-5
10-5 Pipe Bedding RW-5
10-6 Concrete Cradles, Arches & Encasements RW-6
10-7 Pipe Installation RW-6
A. Manufacturer's Recommendations RW-6
B. Pipe Cleanliness RW-6
C. Cathodic Protection RW-7
D. Placing Pipe RW-7
E. Joining Pipe RW-7
F. Covering Pipe RW-7
G. Pipe Restraints and Fittings RW-7
H. Tracing Wire RW-7
I. Pipe Protection Marking RW-8
J. Polyethylene Protection RW-8
K. Polyvinyl Chloride (PVC) Pressure Pipe Installation RW-8
L. Ductile Iron Pipe (DIP) RW-9
M. Transitions RW-9
N. Borings RW-9
10-8 Service Installations RW-10
A. Service Runs RW-11
B. Saddles RW-11
C. Warning Tape RW-11
D. Service Manifolds RW-11
E. Curb Marking RW-11
10-9 Service Abandonment RW-12
10-10 Appurtenances Installations RW-12
A. Underground Protection RW-12
B. Gate Valves RW-12
C. Waning Markings RW-12
D. Dead End Lines RW-12
E. Insulation RW-12
10-11 Pipe Backfill RW-13
A. Performance Based QA/QC (Non-Testable Materials) RW-13
B. Design Based QA/QV (Testable Materials) RW-13
C. Trench Backfill Material RW-14
D. Pipe Zone Backfill RW-14
E. Compaction Test Methods RW-15
F. Testing Frequencies RW-15
10-12 On-Site Recycled Water Facilities RW-15
A. Inspections RW-15
B. Coverage Test for On-Site Irrigation Systems RW-16
C. Controller Charts RW-16
D. Conversion from Potable System to Recycled Water Supply RW-16
E. Conversion from Recycled Water System to Potable Water Supply ..... Supply RW-17
F. On-Site Identification RW-17
G. Quick Coupling Valves RW-18
1. Recycled Water RW-18

2. Potable Water RW-18
H. Sprinklers RW-18
I. Warning Labels RW-18
J. Valve Boxes, Meter Boxes and Tags RW-19
1. Valve and Meter Boxes RW-19
2. Valve and Meter Tags RW-19
K. On-Site Recycled Water Piping RW-19
1. Minimum Requirements of Piping and Fittings RW-20
2. PVC Piping RW-20
L. On-Site Potable Water Piping RW-21
10-13 Testing Procedures RW-22
A. Pressure Test RW-22
B. Tying into the City System RW-23
C. Continuity Testing RW-23
D. Cross-Connection Testing RW-23
10-14 Repairing Installed Improvements RW-23
10-15 Punch List Process RW-24
10-16 Materials RW-24
A. Approved Equal RW-24
1. Product RW-24
2. Contact RW-24
3. Reference RW-24
B. Unapproved Materials RW-24
C. Recycled Water Main RW-24
1. PVC Pressure Pipe RW-24
2. Ductile Iron Pipe RW-25
D. Services RW-25
1. Copper Tubing RW-25
2. Brass Material RW-26
a. Brass Pipe RW-26
b. Brass Fitting RW-26
c. Brass Fittings for Copper Tubing RW-26
3. Corporation Stops RW-26
4. Curb Stops RW-27
5. Dielectric Tape RW-27
6. Service Saddles RW-27
E. Appurtenances RW-28
1. Air Release Valves RW-28
2. Blocking for Boxes RW-28
3. Blow Off RW-28
4. Fittings RW-29
5. Gaskets RW-29
6. Location Stakes RW-29
7. Mainline Valve Lockout RW-30
8. Manhole Frame and Cover RW-30
9. Meters RW-30
10. Meter Idlers RW-30
11. Meter Setters RW-30
12. Meter Spud Couplers RW-30
13. Nuts & Bolts RW-30
14. Nylon Bushings RW-31

15. Patching Material RW-31
16. Polyethylene Encasement RW-31
17. Pressure Regulators RW-31
18. Restraints RW-31
19. Riser Stock RW-32
20. Sampling Stations RW-32
21. Sap Seal RW-32
22. Service Boxes and Lids RW-32
23. Silicone RW-32
24. Telemetering Conduits RW-32
25. Traffic Boxes RW-33
26. Tracing Wires RW-33
27. Tracing Wire Connectors RW-33
28. Tracing Wire Mastic Tape Seal RW-33
29. Valves RW-33
30. Valve Boxes RW-34
31. Valve Covers RW-34
32. Water Pipe Marking Tape RW-34
33. Zinc Caps RW-34
10-17 Recycled Water System Details RW-35

SECTION 1

PURPOSE, DEFINITIONS AND ABBREVIATIONS (PD)

1-1 Purpose PD–1

1-2 Construction Practice PD–1

1-3 Document Conflicts PD–1

1-4 Materials PD–1

1-5 Definitions PD–1

1-6 Abbreviations PD–6

1-7 City Observed Holidays PD-9

[THIS PAGE INTENTIONALLY LEFT BLANK]

SECTION 1

PURPOSE, DEFINITIONS AND ABBREVIATIONS (PD)

1-1 **PURPOSE** – The purpose of these Public Facility Improvement Standards is to provide **minimum** standards for the construction of improvements, which are to be dedicated to the public, and accepted by the City for maintenance and/or operation. These Public Facility Improvement Standards may also apply to certain private works, as well as improvements to be installed within existing rights–of–way and easements. This is necessary to provide for coordinated development of required facilities to be used by and for the protection of the health, safety and welfare of the public. These Public Facility Improvement Standards will apply to, regulate, and guide construction of streets, bikeways, alleys, traffic signals. Grading and site access, drainage facilities, sewage collection and treatment facilities, water distribution and treatment systems, and the related public improvements, and will set guidelines for all private works which involve drainage, grading, trees and related improvements.

1-2 **CONSTRUCTION PRACTICE** – Because it is virtually impossible to anticipate all situations that may arise, or to prescribe specifications applicable to every situation, any items or situations not included in these Public Facility Improvement Standards will be constructed in accordance with approved project improvement plans, accepted construction practices, the City of Lincoln "Design Criteria & Procedures Manual", the State of California Department of Transportation (Caltrans) Construction Manual, the State of California Department of Transportation (Caltrans) Standard Plans, and/or other standards and as specified by the City Engineer.

1-3 **DOCUMENT CONFLICTS** – Should conflicts arise between documents, the approved project improvement plans will govern over these Public Facility Improvement Standards. These Public Facility Improvement Standards will govern over the Caltrans Standard Specifications. In the event of conflict between applicable documents and/or plans, the most restrictive will prevail.

The City Engineer may require additional specifications and/or regulations when deemed necessary to protect the health, safety and welfare of the public. All reference to specifications, standards, or other publication refer to the most current issue.

1-4 **MATERIALS** – Materials have been specified in the related sections of these Public Facilities Improvement Standards. There may be a product name and part number specified. This has been done to maintain the efficiency and compatibility necessary for the City of Lincoln's various systems. If a particular item is not listed, it is not a negative reflection on that item, but merely that it is inefficient for both warehousing and maintenance purposes.

1-5 **DEFINITIONS** – Whenever these terms or titles are used in these specifications, or in any document or instrument where these specifications govern, the intent and meaning will be defines as:

A. **Applicant** – The Developer or their consulting engineering working on their behalf.

B. **Approved Plans** – All plans prepared for the construction of improvements, reviewed, approved and signed by the necessary Departments within the City of Lincoln.

C. **Best Management Practices (BMP)** – Usually related to storm water pollution prevention management practices (SWPPP).

D. **City** – The City of Lincoln and applicable Departments

E. **City Engineer** – The City Engineer or designated representatives of the City of Lincoln, acting either directly or through the staff of the appropriate divisions of the Engineering Department.

F. **Competent Person** – One who is capable of identifying existing and predictable hazards in the surrounding or working conditions which are unsanitary, hazardous, or dangerous to employees, and who has authorization to take prompt corrective measure to eliminate them.

G. **Compaction** – The increase in density of a soil or rock fill by mechanical means.

H. **Consulting Engineer** – Any person(s), firm(s), partnership(s), corporation(s), or combination of, legally and currently registered, licensed and authorized to practice professional engineering in the State of California who prepares or submits improvements plans and specifications for approval by the City Engineer of the City of Lincoln.

I. **Contractor** – Any person(s), firm(s), partnership(s), corporation(s) or combination of currently licensed to perform the type of work involved, who has entered into a contract with any person, corporation or company, or their legal representatives, for the construction of any approved improvement, or portion of any public improvement, within the City of Lincoln.

J. **Department of Public Works** – The Department of Public works of the City of Lincoln. Any person(s), firm(s), partnership(s), corporation(s) or combination of who has entered into a contract with the City of Lincoln to provide engineering or inspection services for the construction of any approved improvement, or portion of any improvement, within the City of Lincoln. Including the Department of Public Services and Engineering Department.

K. **Details** – The detail drawings in these Public Facility Improvement Standards as approved or as amended by the City Engineer.

L. **Developer** – Any person(s), firm(s), partnership(s), corporation(s) or combination of, financially responsible for the work involved.

M. **Development** – The act of process of any construction on properties as well as subdivision improvements. The standard detail drawings in these Public Facility Improvement Standards as approved or as amended by the City Engineer are listed in the report Sections 2.10, 3.10, 4.16, 5.16, 6.12, 7.6, 8.14, 9.39, and 10.17. It is the Contractor's and/or Developer's responsibility to identify the appropriate standard details from these section lists. If clarification is needed for any of the applicable Standard Details, then it is the Contractor's and/or Developer's responsibility to contact the City Engineer to obtain the necessary clarification.

N. **Domestic Origin** – All manufacturing processes involved in the production of the product will occur within the United States for the product to be considered as being of "domestic origin". With steel/iron products this includes smelting or any subsequent process, which alters the material's physical form, shape, or chemical composition, such as bending, drilling, coating, etc. Coatings include epoxy, galvanizing, painting, etc. and will be included in the production process. The manufacturing process will include all grinding, drilling, and finishing of the steel/iron project and is considered complete when the item is ready for use (i.e., fencing, posts, girders, pipe, manhole covers, etc.).

O. **Environmental Review** – The California Environmental Quality Act (CEQA) and the City may require the preparation of environmental documents concerning a proposed project. Work in and around streambeds may require Department of Fish and Wildlife or Clean Water Act permits. Any required environmental review will be completed before the project improvement plans are approved.

P. **Erosion Control Plan Manual** – The latest edition of the "Erosion & Sediment Control Guidelines for Developing Areas of the Sierras" published by the High Sierra Resource Conservation & Development Council for use in the preparation of erosion and sediment control plans.

Q. **Fees** – The schedule of fees and costs will be those established and adopted by the City Council from time to time by resolution or ordinance.

R. **Geotechnical Engineer** – A professional engineer, currently licensed by the State of California as qualified in the field of soil mechanics and soil engineering, and use the title "soil engineer" or "geotechnical engineering consultant.

S. **Green Book** – The latest edition of the "Standard Specifications for Public Works Construction" published by BNi.

T. **Grid Coordinates** – California State Plan Zone II, NAD 83, NGVD 29 coordinate projection.

U. **Ground Coordinates** – Local Plane coordinate system used by the engineer on a given project.

V. **Hazards** – Any work or condition on private or public property that constitutes a hazard to public safety; endangers property; adversely affects the safety, use, or stability of adjacent property; an overhead or underground utility, or a public way, watercourse or drainage channel; or could adversely affect the air quality, or the water quality of any water bodies or water courses.

W. **Improvements** – Refers to the street work, bridges, sidewalk, curb, gutter, driveways, sanitary sewer, water, water storage facilities, reclaimed water, storm drainage, traffic signals, public utilities, landscaping, irrigation, parks, fences, walls, and other facilities to be constructed or installed, by the developer within an existing or future public right–of–way or easement, private areas, and other improvements that the City of Lincoln is responsible to inspect.

X. **Improvement Standards** – The latest adopted version with all amendments and revisions of the City of Lincoln Public Facility Improvement Standards.

Y. **Laboratory** – Any testing agency or testing firm, which has been approved by the Public Services Department or City Engineering.

Z. **Manual of Traffic Controls** – The "Manual on Uniform Traffic Control Devices" (MUTCD), of the State of California, Department of Transportation (Caltrans), latest edition.

AA. **National Pollutant Discharge Elimination System (NPDES)** – A Federal permit administered by the State Water Resource Control Board and the Regional Water Quality Control Boards (Region 5S–Central Valley).

BB. **Notice of Completion (NOC)** – The acceptance of the constructed improvements by the City Council of the City of Lincoln.

CC. **Notice of Intent (NOI)** – The notification of the State Water Resources Control Board necessary to comply with the NPDES General Permit if the project area results in the disturbance of one–acre or more of total land area, or which is part of a larger common area of development or sale.

DD. **Operations** – The Public Services operates the City's water and sewer systems, repairs streets, cleans storm drains, maintains City parks, and collects garbage.

EE. **Owner** – The legal owner of the property on the latest equalized assessment roll in the office of the County assessor.

FF. **Community Development Director** – The Community Development Director of the City of Lincoln, acting either directly or through the staff of the appropriate Divisions of the Community Development Department or their authorized representatives.

GG. **Permit** – An official document or certificate issued by a government agency authorizing performance of a specified activity.

HH. Public Works – Construction of streets, sewers, water supply, etc., for public use.

II. Public Facilities – Streets, sewer water supply, etc., for public use.

JJ. Rainy Season – For the purposes of the Public Facility Improvement Standards, the rainy season is defined as October 1st to April 30th.

KK. Relative Compaction – The result of processing soil and moisture in the most effective manner to obtain the maximum density and stability (or as a minimum, the required percentage of compaction). All relative compaction testing will reference ASTM D–1557–1578 and/or CTM–216.

LL. Safety Rules/Orders – The State of California Construction Code Regulations that are reprinted in part in the CALOSHA Construction Safety Orders by BNi Building News.

MM. Soils Report – A report prepared by any person(s), firm(s), partnership(s), corporation(s) currently legally licensed to prepare "Soils Reports" in the State of California.

NN. State – As used in the State Specifications, is the City of Lincoln. If a state in the USA, is the State of California.

OO. State Highway Design Manual – The "Highway Design Manual" of the State of California, Department of Transportation (Caltrans), latest edition.

PP. State Standard Plans – The "Standard Plans" of the State of California, Department of Transportation (Caltrans), latest edition.

QQ. State Standard Specifications – The "Standard Specifications" of the State of California, Department of Transportation (Caltrans), latest edition.

RR. State Traffic Manual – The "California Manual on Uniform Traffic Control Devices" (CA MUTCD) of the State of California, Department of Transportation (Caltrans), latest edition.

SS. State Construction Manual – The "Construction Manual" of the State of California, Department of Transportation (Caltrans), latest edition.

TT. Stop Work Notice – An order issued by the City Engineer to suspend the Contractors work until an illegal or hazardous situation can be resolved.

UU. Stormwater Management Manual – The latest edition of the "Stormwater Management Manual" published by the Placer County Flood Control & Water Conservation District.

VV. Survey Control Monument Network – Network of Survey Control Monuments and published coordinates as shown in Book 16 of Surveys, page 105.

WW. Storm Water Pollution Prevention Plan (SWPPP) – The plan required by the National Pollutant Discharge Elimination System (NPDES) permit. This will include BMPs for stormwater management, including revegetation and winterization plan for review and approval.

XX. Subdivision Ordinance – The "Subdivision Ordinance" of the City Code as adopted by the City Council of the City of Lincoln.

YY. Zoning Ordinance – The "Zoning Ordinance" of the City Code as adopted by the City Council of the City of Lincoln.

1-6 <u>ABBREVIATIONS</u> – These abbreviations may be used in these Public Facility Improvement Standards:

AASHTO	American Association of State Highway and Transportation Officials
AB	Aggregate Base
ABS	Acrylonitrile–Butadiene–Styrene
AC	Asphalt Concrete and Alternating Current
ASB	Aggregate Subbase
ANSI	American National Standards Institute
APWA	American Public Works Association
ARV	Air Release Valve
ASTM	American Society for Testing and Materials
AWG	American Wire Gauge
AWWA	American Water Works Association
BCR	Beginning of Curb Return
BMPs	Best Management Practices
BO	Blow Off
CAL OSHA	State of California Occupational Safety and Health Act
CalTrans	California Department of Transportation
C & G	Curb and Gutter
C–C	Center to Center
CDD	Community Development Department
CEQA	California Environmental Quality Act
C.F.	Cubic Feet
CIP	Cast–in–place
C/L	Centerline
C.M.P	Corrugated Metal Pipe

Const.	Construction
CST	Construction
CTM	California Test Method (State Lab)
Ctrs	Centers
Cu. Ft.	Cubic Feet
DET	Detail
Dia.	Diameter
DIP	Ductile Iron Pipe
DLC	Detector Lead–in Cable
DR	Drainage
Dwg	Drawing
EVA	Emergency Vehicle Access
Fdn.	Foundation
FL	Flowline
Ga.	Gauge
Gal.	Gallon
Galv.	Galvanized
GR	Grading
Horz.	Horizontal
Hz	Hertz
IBOC	Internal Battery Operated Clock
ID	Inside Diameter
LED	Light Emitting Diode
LS	Landscape
LMA	Luminaire Mast Arm
MAS	Mast–Arm Side mount
MAT	Mast–Arm Top mount
Max.	Maximum
Mil.	Millimeter
Min.	Minimum
M.P.	Metal Plate
NEV	Neighborhood Electric Vehicle
NOC	Notice of Completion
NOI	Notice of Intent

NPDES	National Pollutant Discharge Elimination System
No.	Number
O.C.	On Center
OD	Outside Diameter
OSHA	Occupational Safety & Health Act
P.C.C.	Portland Cement Concrete
PEI	Photoelectric Unit
P.O.C.	Point of Connection
PPB	Pedestrian Push Button
ppm	parts per million
psi	pounds per square inch
PVC	Polyvinyl Chloride
PWD	Public Works Director/Department, Public Services Director/Department, and Engineering Department/City Engineer
RCP	Reinforced Concrete Pipe
RCV	Remote Control Valve
Rwd.	Redwood
RWQCB	California Regional Water Quality Control Board–Central Valley Region 5S
R.P.	Radius Point
R/W	Right–of–Way
Sch.	Schedule
SDMH	Storm Drain Manhole
SMA	Signal Mast Arm
SS	Sanitary Sewer System
SSMH	Sanitary Sewer Manhole
ST	Street
STD	Standard
SWPPP`	Storm Water Pollution Prevention Plan
SWRCD	State Water Resources Control Board
TS	Traffic Signals and Markings
Typ.	Typical
UBC	Uniform Building Code
UL	Underwriters' Laboratory, Inc.
U.S.A	Underground Service Alert
VA	Volts ampere

Var.	Variable
VCP	Vitrified Clay Pipe
Vert.	Vertical
WWF	Welded Wire Fabric
WWM	Welded Wire Mesh

1-7 City Observed Holidays

The City of Lincoln observes the following holidays:

- New Year's Day
- Martin Luther King, Jr. Birthday
- Presidents Day
- Memorial Day
- 4th of July
- Labor Day
- Veterans Day
- Thanksgiving Day
- Day after Thanksgiving
- Christmas Day

[THIS PAGE INTENTIONALLY LEFT BLANK]

SECTION 2

CONTRACTOR AND DEVELOPER RESPONSIBILITIES (CD)

2-1 General CD-1

2-2 Developer Responsibilities.....CD-2
A. Plans, Special Notices, and Permits CD-2
B. Engineering and Improvement Plan Revisions During Construction CD-3
C. Record Drawings..... CD-3
D. Change in Consulting Engineer/Staking and Design CD-4
E. Inspection and Other Fees..... CD-4
F. Overtime Inspection Fees CD-4

2-3 Developer/Contractor or Contractor Responsibilities.....CD-5
A. Plans..... CD-5
B. As Built Plans CD-5
C. Notification/Preconstruction Meeting CD-5
D. Disposal of Removed Material..... CD-5
E. U.S.A. Markings..... CD-5
F. Utility Relocations CD-6
G. Staking..... CD-6
H. Construction Safety CD-6
I. Materials Approval/Submittals CD-6
J. Maintenance, Remedial Work, and Warranty Repairs CD-7
K. Trenching Permit CD-7
L. Preservation of Property..... CD-7
M. Preservation of Survey Information CD-7
N. Access CD-7
O. Interruption to Public Parking Areas CD-8
P. Weather CD-8
Q. Storm Water Pollution Prevention Plan (SWPPP)/ Sediment and Erosion Control Measures CD-8
R. Fluid Discharge..... CD-8
S. Concrete Truck Washout Areas CD-9
T. Dust Control..... CD-9
U. Working Hours..... CD-9
V. Cultural Resources CD-10
W. Hazardous Work Materials CD-10
X. Work Zone Traffic Control CD-10
1. Start of Construction CD-11
2. Lane Changes and Closures CD-11
3. Flagpersons..... CD-11
4. Adjacent Roadway Excavation CD-11

5. Steel Trench Plates CD-11
6. Sidewalk Removal CD-12
Y. Street Cleaning CD-12
Z. Construction Water CD-12
AA. Water Valve Operation CD-12
BB. Pavement Milling Requirements CD-12
CC. Blasting and Explosive Requirements CD-13
DD. Personnel CD-13
EE. Contractor Employee Vehicle Parking CD-13
FF. Trailer and Material Storage CD-13
GG. Oversize and Overweight Permit Loads CD-14

2-4 Contractor Responsibilities CD-14
A. Inspection requirements CD-14
B. Saturday Inspection CD-15

2-5 Minimum Requirement for Model Home Building Permits CD-15
A. Pad Grades CD-15
B. Property Corners CD-15
C. Utilities CD-16
D. Fire Protection CD-16
E. Streets CD-16

2-6 Minimum Requirement for Production Home Building Permits CD-17
A. Roadways CD-17
B. Wet Utilities CD-17
C. Dry Utilities CD-17
D. Lighting CD-17
E. Pad Grades CD-17
F. Property Corners CD-17
G. Storm Water Plan CD-17
H. Signing and Striping CD-17
I. Walls CD-18
J. Recorded Map CD-18

2-7 Requirements for Subdivision Notice of Completion (N.O.C.) CD-18
A. Soundwalls CD-18
B. Temporary Fences CD-18
C. Landscaping CD-18
D. Fees CD-18
E. Pad Certifications CD-18
F. Bond CD-18
G. Record Drawings CD-19
H. Final Inspection CD-19
I. NOC CD-19

2-8 Residential Occupancies During Subdivision Building CD-19
A. Street Cleaning CD-19
B. Debris CD-19
C. Landscape Materials CD-19
D. Barricades CD-19

E. Temporary Fencing CD-19
F. Other Requirements CD-20

2-9 Guarantee and Warranty CD-20
A. Subdivision Improvements & Encroachment Permit Improvements... CD-20
1. City's Responsibilities CD-20
2. Final Punch List CD-21
3. Legal Action CD-21
B. Underground Warranty Work within City Street Right-of-Way CD-21
1. Pavement Cutting CD-21
2. Backfill CD-21
3. Patching..... CD-21
4. Closed Circuit TV and Pipe Testing …….. CD-21

2-10 Contractor and Developer Details CD-21

[THIS PAGE INTENTIONALLY LEFT BLANK]

SECTION 2

CONTRACTOR AND DEVELOPER RESPONSIBILITIES (CD)

2-1 **General** – All improvements within the City of Lincoln will be approved and permitted by the City, and will conform to the City of Lincoln Design Criteria & Procedures Manual. Work in the City's rights-of-way will be installed in strict accordance with the approved project improvement plans; the City of Lincoln Public Facility Improvement Standards; and certain parts of the latest editions of the Caltrans Standard Plans and Caltrans Standard Specifications.

Should conflicts arise between documents, the approved project improvement plans will govern over these Public Facility Improvement Standards. These Public Facility Improvement Standards will govern over the Caltrans Standard Specifications. In the event of conflict between applicable documents and/or plans, the most restrictive will prevail.

The manufacturer's guidelines for all materials to be used on the project will be present at the construction site at all times for reference.

Developers and their Contractors or other Contractors working on public works projects, will comply with all applicable City, County, State, and Federal laws and regulations relating to construction of the improvements as required.

If the City Engineer determines that any work on private or public property constitutes a hazard to the health, safety, or welfare of the public; endangers property; adversely affects the safety, use or stability of adjacent property; an overhead or underground utility, or a public way, watercourse or drainage channel; or could adversely affect the air quality; or the water quality of any water bodies or water courses; the City Engineer will issue a stop work notice to the owner of the property upon which the condition is located, or person or agent in control of such property. Upon receipt of such stop work notice, the recipient will, within the period specified therein, stop all work, obtain any necessary permits and conform to the requirements identified in the stop work notice. The City Engineer may require the submission of plans or other reports, detailed construction recommendations, studies, or other engineering data prior to and in connection with any corrective or proposed work or activity.

All constructed improvements within the City of Lincoln will be performed by a contractor licensed in accordance with the California Contractors State License Law, Business and Professions Code Section 7000 et seq.

All persons, firms, partnerships, or corporations doing business of any nature in the City of Lincoln will have a current Business License as stated in Chapter 5.04-License Tax, City of Lincoln Municipal Code. This includes developers, engineers, and contractors.

Refer to the City of Lincoln's Design Criteria & Procedures Manual for design information.

All projects will be in compliance with the State water quality requirements for erosion and sedimentation control at all times.

2-2 **DEVELOPER RESPONSIBILITY** – The Developer will be responsible for items designated in the City of Lincoln "Design Criteria & Procedures Manual", latest edition, the work of the Contractors, and these items:

A. Plans, Special Notices, and Permits – These plans, notices, and permits will be on site or accomplished prior to beginning any construction on-site.

1. Approved project improvement plans will be identified by placement of the City Engineer's signature on the cover sheet. No construction will be authorized until the project improvement plans are approved in this manner. Any construction prior to approved project improvement plans will be done at the risk of work being rejected and removed.

2. Approval and necessary permits from any and all jurisdictional agencies whose facilities are involved, or whose approval is required. The Developer/contractor will file a request for permit forms. The City Engineer may refer an application to other interested public agencies for their recommendations.

3. If the project area results in the disturbance of one-acre or more of total land area, or is part of a larger common area of development or sale, a copy of the landowner's filed Notice of Intent (NOI) and attached acceptable Storm Water Pollution Prevention Plan (SWPPP) with WDID number will be available on site at all times. The SWPPP will comply with Section A of the Statewide National Pollutant Discharge Elimination System (NPDES) General Permit for Construction Activity.

Regardless of project size, the site-specific SWPPP will be submitted concurrently with the grading plan or project improvement plans, and will be an integral part of the requirements for development. The SWPPP will be implemented and updated at the appropriate level to protect water quality at all times throughout the life of the project. The Developer will

also inform the lot/home buyers of appropriate BMPs after purchase. Refer to the City of Lincoln Design Criteria & Procedures Manual Section 11 Grading 11-5-F Erosion and Sedimentation Control for further information.

4. Application for permit and payment of required fees for sewer taps.

5. Verification of all street names with the City's Community Development Director before ordering street signs.

6. The project's operation will be conducted entirely outside any designated flood plain boundaries and any designated "no grading" areas.

7. A Tree Permit will be onsite.

8. Where work to be done requires issuance of a permit by a State agency, including but not limited to, the State Department of Transportation, Department of Fish and Game, etc.

B. **Engineering and Improvement Plan Revisions During Construction** – The Developer will be responsible for providing all professional engineering services that may be required during construction, the preparation of revised plans for construction changes, and the timely preparation of record drawings upon completion of the construction.

Minor changes not affecting the basic design of the improvements may be made without formally revising the plans. The requested change will be provided to the City Engineer in writing, and approval will be in writing from the City Engineer. These changes will appear in the record drawings. Refer to the City of Lincoln Design Criteria & Procedures Manual for additional information.

C. **Record Drawings** – The contractor/developer will keep an accurate record of all approved deviations from the plans before and during construction. One complete set of mylars of the record civil plans will be submitted to the Engineering Department for comment within 30- days of completion of the on-site work. These drawings are then required to have any changes made and be resubmitted to the Engineering Department within 30-days of the filing of the Notice of Completion Departmental Approval Form signifying formal acceptance of the completed improvements. (See Contractor Responsibility below for "As Built" related information.)

Specific information for the requirements for these Record Drawings is available in the City of Lincoln Design Criteria & Procedures Manual.

D. **Change in Consulting Engineer/Staking and Design** – If the Developer elects to have a registered civil engineer or licensed land surveyor, other than the engineer who prepared the plans, provide the construction staking, then the Developer or the contractor will provide the City Engineer the name of the individual or firm, in writing, one week prior to the staking of the project for construction.

In the Developer's notification of a change in the firm providing construction staking, acceptance of responsibility for design changes and "as built" information, and record drawings as noted above will be acknowledged.

E. **Inspection and Other Fees** – The fees will be in accordance with the latest fee schedule as adopted by City Council resolution. Before permits are issued, the Developer will deposit with the City of Lincoln, a check or cash in a sufficient sum to cover the estimated fees for issuance of permits, charges for review of plans, specifications and reports, other engineering services, field investigations, necessary inspection or other work, and routine laboratory tests of materials and compaction.

Should the actual cost of City services exceed the amount of fees on deposit, the Developer will be notified in writing to deposit additional fees necessary to complete the project.

Should the fees on deposit exceed the actual cost of City services, the excess fees will be refunded to the Developer after the one-year warranty period is complete.

If any work is done in violation of any laws or rules, or not performed in accordance with approved permits, plans, or specifications, a fee covering investigation of any violation and inspection and plan checking of work required to correct such violation will be charged to the violator to cover all actual costs and fees.

F. **Overtime Inspection Fees –** If permission is received for any inspection services performed beyond normal working hours, or on weekends or holidays, either at the request of the contractor/developer, or at the discretion of the City Engineer, there will be overtime rates charged for this inspection work. Payment of the overtime charges will be in addition to the normal plan checking and inspection fees. The amount of the additional fees will conform

to the fee schedule for plan checking and inspection fees as adopted by City Council.

If the overtime services are desired, payment will be made at least 48-hours in advance, unless the amount currently on deposit for plan checking and inspection fees is determined to be sufficient by the City Engineer.

2-3 **DEVELOPER/CONTRACTOR OR CONTRACTOR RESPONSIBILITY** – The Developer/Contractor or Contractor with a contractual obligation to the City will be responsible for these items:

A. **Plans** – Perform construction as shown on approved project plans, the Design Criteria & Procedures Manual, these Public Facilities Improvements Standards, and any and all laws pertaining to the project work. Any additions, deletions, or changes to the approved plans will be submitted for review and approval prior to construction.

B. **As Built Plans** –An as-built set of plans will be kept on-site and updated at least weekly. These are to be coordinated with the City Engineer's set of plans for preparing a complete and accurate set of record drawings for the permanent records of the City.

C. **Notification/Preconstruction Meeting** - Schedule a preconstruction meeting with the Engineering Department and any other City departments required for reviewing and inspecting the improvements. This meeting will include representatives of any other utility companies and others affected by the project. Without exception, the meeting will take place a minimum of 72-hours prior to the start of construction.

D. **Disposal of Removed Material** - All material removed from a project will be disposed of properly. Special attention will be given to planning for recycling the material, and to the actual recycling process. The written recycling plan will be provided to the City Engineer at the pre-construction meeting.

E. **U.S.A. Markings** - Contact ”Underground Service Alert" notification 48 hours before any excavation. Any areas not marked with white paint will not be included in the USA, and these areas will not be excavated. The Contractor will be responsible for any damage resulting from excavation in unmarked areas. The Applicant requesting the USA markings will be responsible for the removal of the USA markings upon completion of the work.

F. **Utility Relocation** - Existing utilities interfering with the approved installation will be removed, reset, relocated, adjusted, or otherwise managed as specified on the approved project improvement plans; the Public Facilities Improvement Standards and appropriate Details for utility crossings and installation; or as directed by the City Engineer; and with direction from the owner of the infrastructure.

No work will occur within the road right-of-way prior to completion of the conflicting utility relocation.

If the utility is the property of a public utility or franchise, such owner will be notified by the City Engineer to relocate the utility within a specified reasonable time. The Contractor will not interfere with such utility until after the expiration of the time specified, and then only with written direction from the City Engineer.

Utilities damaged during construction will be repaired to the satisfaction of the City Engineer and with direction from the owner of the utility. Patching of damaged surface areas will not be allowed, but will be removed and replaced to the satisfaction of the City Engineer.

G. **Staking –** The Consulting Engineer will notify the City Engineer when the Contractor first calls for grades and staking and will provide the City Engineer with a copy of all cut sheets.

H. **Construction Safety -** Maintain a safe work site. Construction safety within the City of Lincoln will be governed by the Construction Safety Orders of the Occupational Safety and Health Standards of Title 8 of the California Code of Regulations.

I. **Materials Approved/Submittals** – To illustrate conformance with the plans and these Public Facilities Improvement Standards, the Contractor will provide the City Engineer with formal submittals for any materials planned to be used that are not specifically listed in the latest Public Facilities Improvement Standards as approved materials; and for all aggregate, concrete and asphalt concrete. For native soil and rock trench backfill, the laboratory tests requested may include, but will not be limited to: ASTM D422 Gradation, D2419 Sand Equivalent, D4318 Atterberg Indices, D1557 Modified Proctor Curve, and D2844 R-Value.

The submittals will be delivered to the City Engineer a minimum of 2 weeks prior to the pre-construction conference. The City will review the submittals within 7 calendar days. Any comments on the returned submittals will be addressed by the Contractor, to the satisfaction of the City Engineer, prior to the delivery and installation of submitted materials.

The Contractor will submit a mix design for asphalt concrete materials to be use on the project at least 10 calendar days prior to use of the material.

J. **Maintenance, Remedial Work, and Warranty Repairs -** The plan and materials will be submitted for review and written approval by the City Engineer prior to beginning any repairs. Written approval and/or signed plans will be onsite during all work of this nature.

K. **Trenching Permit -** For trenches 5-feet and deeper, a copy of the Contractor's annual CALOSHA trenching permit, and a copy of the Contractor's letter informing CALOSHA of the work location with the date and time the trenching is commencing will be submitted to the City Engineer prior to beginning excavation of trenches. The project's designated "competent person" will be present during all trench work.

L. **Preservation of Property -** The project's property boundaries will be clearly delineated by the use of orange temporary construction fencing. Where work is being done in an off-site easement, the property owner will be notified 48- hours prior to beginning any work. Extreme care will be taken to protect both the existing project site and all adjacent improvements from damage. The Contractor will provide and install suitable safeguards approved by the City Engineer to protect objects from injury or damage. Any damage resulting from the construction will be repaired or replaced in a timely manner at the Contractor's expense. (Refer to Caltrans Standard Specifications Section 7)

Flood plain boundaries will be clearly delineated in the field prior to construction by the use of black silt fence. All "no grading" areas will be clearly delineated by the use of orange temporary construction fencing on site.

Where plans call for the retention of trees within a project, proper screening and flagging will be placed around the trees in accordance with the Lincoln Municipal Code.

M. **Preservation of Survey Information** – All existing monuments and/or other survey markers will be protected, and the Contractor will notify the City Engineer of any damaged or removed private, City, County, State, or Bureau of Land Management monuments.

N. **Access -** At no time will any occupant be restricted from access to their property. This requirement includes access by emergency and law enforcement personnel, the United States Post Office; the City's refuse collection department,

and other applicable utilities as necessary for their business operations. Any deviation requires written permission from the City Engineer and applicable affected entity. This written permission will be available on site at all times.

O. **Interruption to Public Parking Areas** – Obtain a City Encroachment Permit where parking needs to be interrupted by construction work. The Contractor will place Type II barricades with "No Parking" notices behind the curb, adjacent to the respective parking area, a minimum of 24-hours prior to the start of construction. Information on the notice will include the date and times that parking is prohibited and will be legible from a distance of 25 feet. Barricades/notices will be placed at a minimum interval of one for each parking space. Fire Lane access, at a width of 20', will be maintained at all times for emergency services personnel (Police, Fire, and Ambulance).

P. **Weather** – Be certain that construction work will not commence or progress when the weather jeopardizes the safety of the public, a safe working environment; stormwater, erosion and sediment control; air quality, and/or the quality of the project in any manner.

Q. **Storm Water Pollution Prevention Plan (SWPPP)/Sediment and Erosion Control Measures** – The SWPPP will be implemented at the appropriate level to protect water quality at all times throughout the life of the project. Non-stormwater BMPs must be implemented throughout the year. The dynamic nature of construction allows for, and may require, changes to the SWPPP based on the particular nature of the storm should the Plan not be effective. Any deviation from the approved SWPPP will be reported in writing to the project Developer so the appropriate notice can be sent to the Regional Water Quality Control Board and a copy sent to the City Engineer.

R. **Fluid Discharge** – Utilizing the City's storm water drainage system for residual discharge from boring equipment, flushing, or other operations without the required measures is prohibited. This discharge is a violation of the Clean Water Act. Discharge will not be allowed into an open area without the written approval of the property owner, or into a wetlands or creek area prior to approval by the California State Department of Fish and Game.

All activities generating fluids will include adequate measures to mitigate muddy or other fluid discharge as directed by the project's SWPPP. Acceptable mitigation is pumping the fluid into a tanker and hauling it away.

Other mitigation measures should be presented to the City Engineer in writing if they deviate from the acceptable SWPPP. Removal of any residual material is the responsibility of the contractor.

S. **Concrete Truck Washout Areas** – The contractor will use BMPs as precautions and/or devices for the protection of wetlands, vernal pools and sensitive open space areas, which may border the project, and to assure compliance with the SWPPP.

T. **Dust Control** - Control dust resulting from the performance of the work, either inside or outside the City's right-of-way. No dust will leave the project site at any time. Appropriate measures such as watering exposed earth surfaces during clearing, grading, earth moving, other site preparation, and project activities will be taken throughout the day to minimize dust and provide appropriate air quality. Work will be curtailed when wind exceeds 15-miles per hour, and at the direction of the City Engineer if adequate air quality cannot be maintained.

In addition to meeting the requirements of the City Engineer, the project will be in compliance with the Placer County Air Pollution Control District.

Prior to using any chemical additives for dust control, or for the use of any dust palliative, written approval from the City Engineer through the submittal process will be obtained. The City Engineer will consider only products whose performance has been certified by the California Air Resources Board for approval. (Refer to Caltrans Standard Specifications Sections 17 and 18 for additional information.)

If non-potable or reclaimed water is used for dust control, copies of applicable permits or waivers from the Regional Water Quality Control Board will be given to the City Engineer and available on-site at all times. All tanks and conveyances will be properly labeled with warnings and have appropriate cross connection measures in place and used at all times pursuant with the State of California Administrative Code, Title 17-Public Health entitled "Regulations Relating to Cross-Connections".

U. **Working Hours** - Be knowledgeable of the City of Lincoln's noise ordinance that regulates the hours of project construction which will be limited to:

Normal Work Hours:	7:00AM to 7:00 PM
Normal Work Days:	Monday through Friday

Work between 8:00 AM to 5:00 PM on Saturday, Sunday and Holidays requires a written request to the City Engineer 72-hours, 3 full regular working, days prior to the desired construction. If work is allowed outside regular work hours, the Contractor will have a copy of the written approval available at the work site. Work is defined as having equipment engines running, however, workers will not

be on site more than 1/2-hour before and after work times, and will be performing work related functions.

Any deviation to the above working hours has special requirements and needs written permission of the City Engineer.

There may be additional limitations placed on working hours specified on the project's approved plans, conditions of approval, special provisions, or encroachment permit.

V. **Cultural Resources** - Stop construction immediately if cultural resources are discovered during excavation operations. It is possible that previous activities have obscured surface evidence of cultural resources. If signs of an archeological site, such as any unusual amounts of stone, bone or shell are uncovered during grading or other construction activities, work will be immediately halted within 100 feet of the find. The City of Lincoln Community Development Department (CDD) will be notified immediately. The City CDD will consult a qualified archaeologist for an on-site evaluation. The City will collect additional fees based on actual cost incurred for the archaeologist. The archaeologist may require additional mitigation.

W. **Hazardous Materials** - Immediately contact the City of Lincoln Fire Department should construction operations uncover hazardous materials, or materials, which the Contractor believes may be hazardous waste, as, defined in Section 25117 of the Health and Safety Code. This material is required to be removed to a Class I, Class II or Class III disposal site in accordance with provisions of existing law. The area containing the hazardous material will be marked and securely protected until an investigation by a member of the Fire Department is conducted.

X. **Work Zone Traffic Control** - Provide a traffic control plan whenever traffic flow is impacted by the project, or as required by the Police Department or City Engineer. The traffic plan will receive approval from the Police Department and the City Engineer prior to being in effect.

In preparation of the Traffic Control Plan, the Contractor is referred to the State of California Standard Plans, or Chapter 6 of the Caltrans Manual on Uniform Traffic Control Devices (MUTCD) (latest edition), and the Work Area Traffic Control Handbook (WATCH Manual) published by BNi Books, a division of Building News Inc. For situations detailed in different manuals, the Caltrans Standard Plans, and then Chapter 6 of the MUTCD will take precedence.

A copy of the approved traffic control plan and any required permits will be maintained on-site at all times during traffic control measures. In addition to the manuals, these measures will apply.

1. **Start of Construction** - Construction within City rights-of-way will not begin until all equipment required on the approved traffic control plan has been erected, all required permits from other agencies have been obtained, and the Contractor has obtained approval from the Police Department and City Engineer. Parties not obtaining prior approval will be subject to a Stop-Work Order from the City. If at any time it appears to the Police Department or City Engineer that the approved traffic control plan is not effective, or unsafe, modifications will be made immediately.

2. **Lane Changes and Closures** - Lanes will be closed using metal sign stands (each including all three flags), delineators or cones, or barricades, as shown on the approved traffic control plan.

   A lighted arrow board may be employed as an additional lane change measure. Barricades placed in the excavation section adjacent to a traffic lane will be placed at a maximum of 50-feet intervals. Warning signs attached to a barricade are not acceptable.

   Lane closures are permitted from 9:00 AM to 3:00 PM unless otherwise noted on the approved traffic plan or approved by the City Engineer.

3. **Flagpersons** - Flagpersons will be equipped as required in the governing manual with bright colored or fluorescent vests or clothing, flags, and/or stop/slow paddles and other equipment as needed. During darkness, clothing will be reflectorized and will be visible for one thousand feet, and the flag person will be equipped with a flashlight with an orange cone.

4. **Adjacent Roadway Excavation** - Where excavation adjacent to an existing roadway results in an elevation difference of greater than 0.16- foot, the excavated area will be filled with compacted aggregate base (3/4-inch minus), flush with the adjacent roadway at a slope not to exceed 4:1 (horizontal to vertical) prior to the end of each workday. Native fill may only be used with the approval of the City Engineer.

5. **Steel Trench Plates** - Steel trench plates will not be used over open trench areas without the approval of the City Engineer. All steel plates will be adequately restrained to eliminate shifting. Steel plates do not eliminate the need for shoring. Temporary asphaltic plant mix ("cut-back") at least one-foot in width will be used for a transition on each edge of the plate. "Rough

Road" or "Bump" signs will be installed 200-feet on each side before the steel plate. The sign will only be mounted to an operable, lighted barricade for a maximum of 24 hours. The sign will be mounted to a 4-inch x 4-inch post if the placement exceeds 24-hours.

6. **Sidewalk Removal** - The removal of sidewalk and/or curb and gutter requires the use of lighted barricades with construction ribbon placed in a secure manner. Wooden lath with flagging or cones will not be allowed. Signs indicating “Sidewalk Closed" will be installed at the ends of construction areas.

Y. **Street Cleaning** - Monitor the public streets and sidewalks for dirt or mud that is tracked onto the public rights of way. All dirt and/or mud will be picked up, and not washed into the existing storm drain. The Contractor will clean the streets daily, or more often if so directed by the City Engineer. If the Contractor fails to keep the streets clean, the City may elect to clean the areas and charge the costs to the appropriate company.

Z. **Construction Water** - All construction water will be metered and paid for by the Developer or Contractor. The Contractor will obtain a hydrant meter permit from the City Finance & Administration Services Department for the use of construction water. If the Contractor desires to use their own hydrant meter, that hydrant meter will be brought to Finance & Administration Services to register the serial number and reading. All meters will be read by the Contractor, and the usage reading given monthly to the Engineering Department Construction Manager. Prior to project completion, the construction meter will be brought to the Support Services Department – Utilities Billing for a final reading and payment of all charges in full.

AA. **Water Valve Operation** - After the water system has been tied-in to the City of Lincoln water system, only City of Lincoln personnel will operate water valves. The only exception is when the Contractor has obtained written permission from the City Engineer. Due to the possible health and safety risks, extreme caution will be taken by the Contractor to be certain that no water valves in the active system are operated.

BB. **Pavement Milling Requirements** - All milled edges perpendicular and diagonal to the traveled way will be temporarily transitioned with temporary pavement ("cut-back"). A W8-8 "Rough Road" or W8-1 "Bump" sign will be installed 200-feet before the pavement milled location. The sign may be mounted to a metal flag tree stand for a maximum of 24-hours. If the sign is to be in place for longer than 24-hours, it will be mounted to a 4" x4" post.

CC. Blasting and Explosive Requirements - Prior to any and all blasting operations within the limits of the City of Lincoln, the Contractor will have written approval of these items:

1. A detailed blasting safety plan including existing structure and utility locations; type of explosives to be used including storage and security plan; the location, depth and drill/placement pattern; the peak particle and sonic velocity limitations; and the flyrock protection plan.

2. A valid California State Blasting License issued from the State of California Department of Industrial Relations, Occupational Safety and Health Administration.

3. A current City of Lincoln Business License.

4. City of Lincoln "Explosives Application/Permit" issued by the City's Fire Department the current required insurance documents as established by the Risk Manager on file in the Risk Manager's Office

5. Notify these City Departments 24 hours in advance of blasting: Police Dispatch: (916) 645-4040; Public Information Office: (916) 434-2492 (City Clerk) (916) 434-2493; Public Services: (916) 434-2450.

6. A complete and accurate blasting record for each blast completed including location of blasts with depth and number of drill holes, explosive used, quantity and location of seismographs, and all other information necessary to provide a complete record, which will be provided to City Engineer within 24-hours after blasting operations.

Copies of all required items will be on site and available to the City Engineer or law enforcement prior to and during any blasting activity.

DD. Personnel - Retain only personnel competent in the particular trade undertaken to be employed for the construction work.

EE. Contractor Employee Vehicle Parking - Inform the employees that parking will be limited to designated areas on-site, and will not encroach into designated wetland areas, tree protected zones, or any other areas protected by jurisdictional boundaries, Conditions of Approval, or City ordinances.

FF. Trailer and Material Storage - Obtain an Encroachment Permit from the Engineering Department prior to placing any dumpsters, construction materials, or equipment in the City of Lincoln right-of-way. Use of the City right-of-way will

not be approved if there is adequate storage space on-site. Construction offices or material trailers will not be placed within the City right-of-way. A copy of the Encroachment Permit will be visible at all times on the object(s) placed in the City right-of-way. The Permit posting may be placed on a lath and placed on the material.

GG. Oversize and Overweight Permit Loads - Obtain a Transportation Permit from the City Engineer should it be necessary to move oversized/overweight loads within the City of Lincoln. (County and State permits may also be necessary.)

2-4 **CONTRACTOR RESPONSIBILITY** – In addition to the Standards previously stated, Contractor with contracts and agreements with the City will be responsible for these items:

A. Inspection Requirements - Inspection will be required for any improvement constructed to the City Public Facilities Improvement Standards, and for which it is intended that the City will assume maintenance responsibility.

1. The City requires a pre-construction meeting 72-hour prior to start of work. There are no exceptions to this requirement.

2. Each phase of construction will be inspected and approved prior to proceeding to subsequent phases.

3. Adequate access to the site for inspection will be provided at all times during the construction phase and for a minimum period of one year after completion of the work.

4. Private on-site grading and drainage will be inspected during construction by the City Engineer.

5. Test all constructed utilities in accordance with these Public Facilities Improvement Standards and manufacturer's and industry standards as specified. Any test data generated by the City Engineer, the Developer, or the Contractor will be immediately provided to all parties.

6. Any improvements constructed without inspection as provided above, or constructed contrary to the order or instructions of the City Engineer, will be deemed as not complying with the City Public Facilities Improvement Standards, and will not be accepted by the City. Written notice of non-compliance will be given to the developer and the contractor. All non-compliant work will be at the Developer's and/or Contractor's risk, and subject to rejection and removal. When the City Engineer deems the

improvements may proceed, a written notice will be provided by the City Engineer.

7. Within ten days after receiving the request for final inspection, the City Engineer will inspect the work. A written notice will be provided to the Contractor, Consulting Engineer, and Developer listing any particular defects or deficiencies that must be remedied. The Contractor will proceed to correct any such defects or deficiencies at the earliest possible date.

8. When the work has been completed, a second inspection will be made by the City Engineer to determine if the previously mentioned defects have been repaired, altered, and completed in accordance with the plans. After the City Engineer approves the work and accepts the work for the City, the Contractor, Consulting Engineer, and Developer will be notified in writing of the date of final approval and acceptance.

9. On assessment districts and projects where the City participates in the costs, quantities will be measured in the presence of the City Engineer, Consulting Engineer, and Contractor and witnessed accordingly.

B. Saturday Inspection Services – The Contractor will request Saturday inspection services in writing to City Engineer at least 48-hours prior to the time the inspection is needed using the Saturday Inspection form. Granting the request to provide Saturday inspection will be at the sole discretion of the City Engineer and will be subject to the availability of inspection personnel. If permission is received for any inspection services performed on Saturdays, either at the request of the contractor/developer, or at the discretion of the City Engineer, there will be overtime charged for this inspection work. If the Saturday services are desired, payment will be made at least 48-hours in advance, unless the current amount on deposit for plan checking and inspection fees is determined to be sufficient by the City Engineer.

2-5 MINIMUM REQUIREMENTS FOR MODEL HOME BUILDING PERMITS –

Model home building permits may be issued when these items are completed and verified:

A. Pad Grades - The pad grades for the model home lots have been certified by a currently registered Civil Engineer, or a currently licensed Land Surveyor, and approved by the City Engineer.

B. Property Corners – All property corners for each of the model home lots will be staked to the satisfaction of the City Engineer. If curb and gutter and

sidewalk have been placed at the time model home permits are applied for, the front property corners will be marked as shown on appropriate detail presented in Section 2-10.

C. **Utilities** - All utilities, utility crossings and utility extensions to each lot, located within the roadway, will be installed except as provided for in the development agreement. Utilities include, but are not limited to, natural gas, electric, cable, telephone, water, sewer, and storm drain.

D. **Fire Protection** – An approved fire protection and access plan by the Fire Chief.

E. **Streets –** Construction of model homes will meet the following street conditions to the satisfaction of the City Engineer:

1. Construction of model homes between May 1 and September 14 of each year will meet the following requirements:
   a. All streets in the subdivision providing access to the model homes will have a minimum 20-foot wide road with a minimum 4-inch road base, compacted to withstand the imposed load of 75,000 pounds.
   b. All model homes will have continuous street access from a maintained public street.
   c. The public streets will be clean at all times.
   d. The approved project Storm Water Pollution Prevention Plan (SWPPP) will be on site and be able to be in place within 12 hours.

2. Construction of model homes between September 15 and April 30 of each year will meet the following requirements:
   a. All streets in the subdivision providing access to the model homes will be paved with a minimum 2-inch thick asphalt concrete (AC) layer.
   b. All streets will be connected to a maintained public road
   c. The public streets will be clean at all times.
   d. The approved project Storm Water Pollution Prevention Plan (SWPPP) will be on site and be able to be in place within 12 hours.

3. If the Developer intends to obtain an alternative access to the model homes from an adjacent maintained public street, then the developer will obtain an encroachment permit from the City Engineer.

4. The Director of Community Development will require all construction work of any type on the model homes to cease immediately until all, or additional portions, of the subdivision improvements are finished, if necessary to protect the health, safety and/or welfare of the public and its workers.

2-6 MINIMUM REQUIREMENTS FOR PRODUCTION HOME BUILDING PERMITS

Production home building permits may be issued once the subdivision has been verified to be substantially complete. The City Engineer will deem the subdivision substantially complete when these items are completed or verified, except as provided for in the specific Development Agreements:

A. Roadways – All surface street improvements (sidewalks, curbs, gutters, ramps, driveways and street paving) are installed.

B. Wet Utilities - All water, sewer and storm drainage components will be tested, approved and operational. This includes conformance to the City of Lincoln Fire Department's minimum flows for all fire hydrants. All manholes, water valves, and appurtenances are raised to grade and paved.

C. Dry Utilities - All underground gas, electric, telephone and TV cable facilities installed and backfill of trenches completed.

D. Lighting – Street lighting system tested and accepted.

E. Pad Grades – The pad grades for the building lots have been certified by a currently registered Civil Engineer, or a currently licensed Land Surveyor, and approved by the City Engineer.

F. Property Corners – The lot corners in the City sidewalk or curb and gutter and at the back of lots are marked to the satisfaction of the City Engineer and as shown on Standard Detail H-26 and Section 3-7P of these Improvement Standards.

G. Storm Water Plan - The approved project Stormwater Pollution Prevention Plan (SWPPP) will be on site and in place at all times.

H. Signing and Striping – Street name signs, traffic signs, and one-coat striping and markings.

I. **Walls** - All common lot retaining walls detailed on the approved project improvement plans, and sound walls at lots for which permits are applied.

J. **Recorded Map** - Final subdivision map is recorded.

2-7 MINIMUM REQUIREMENTS FOR SUBDIVISION NOTICE OF COMPLETION (N.O.C.) –

Prior to the acceptance of public improvements, these items will be completed and verified by the City Engineer:

A. **Final Inspection** – The Contractor will request final inspection of construction improvements from all required City departments. Following this final inspection of the project, the City departments will issue the Contractor a final punch list. The Contractor will complete all items on the punch list and arrange for re-inspection as necessary.

B. **Sound walls –** On all City owned and/or maintained sound walls the developer is required to submit acceptable written certification that an anti-graffiti paint coat has been placed on the sound walls.

C. **Temporary Fencing** - Temporary fencing erected to enclose the frontage of model home areas will be removed from the City right-of-way.

D. **Landscaping** – All required irrigation and landscaping will be in place and accepted.

E. **Fees** – The Developer will have paid all outstanding plan check, inspection, and other fees due to the City.

F. **Pad Certificates** – Lot pad elevation and compaction certifications will be forwarded to the City Engineer and Building Department and accepted by these Departments.

G. **Bond** – The Developer will have posted a Maintenance Bond to cover the one-year construction maintenance warranty period. The Maintenance bond is to be 20% of final construction cost for public improvements only.

H. **Record Drawings** – The Project Design Engineer will submit one complete set of mylars and on set of prints of the Record Drawings to the Engineering Department, prior to final acceptance of the completed improvements and filing of the Notice of Completion (NOC). There will be no exceptions permitted. Refer to the City Design Criteria & Procedures Manual Section 2-18.

I. **NOC** – The developer will obtain sign-off of the "Notice of Completion Department Approval Form" from all required departments and deliver completed form to the PWD for processing the NOC.

2-8 RESIDENTIAL OCCUPANCIES DURING SUBDIVISION BUILDING –

Prior to the occupancy of one or more homes, the occupant(s) will have a safe, clean, unobstructed travel-way, including sidewalks, to access their home. This applies to newly constructed streets within the subdivision and extends to the closest existing street. These minimum standards are to be met:

A. **Street Cleaning** – Streets will be thoroughly cleaned, from the back of walk to the opposite back of walk, which includes the streets, at the end of each workday.

B. **Debris** – No building materials, portable toilets or construction equipment will be stored within the street right-of-way without a valid Encroachment Permit. Waste material including windblown debris, will be disposed of properly.

C. **Landscape Materials** - Piles of landscaping related materials (such as cobbles, bark or gravel) may be staged in the streets for immediate use only with an Encroachment Permit. If stored overnight, a lighted barricade will be placed to each side of the pile, toward traffic. In no event will the pile extend into the street from the curb farther than the width of a parked car.

D. **Barricades** - Unoccupied cul-de-sacs or other sections of streets for which there is no public access necessary will be barricaded. Barricades will be Type III (or fencing as approved by the City Fire Department), subject to the approval of the Engineering Department.

E. **Temporary Fencing** - Temporary fencing erected to enclose the model home areas will not be placed further into the street than the top of the City curb. The fencing will not be anchored into the sidewalk, curb or gutter. The

fencing will be removed prior to issuance of a Notice of Completion. Fencing will maintain a minimum 3-foot clearance around fire hydrants.

F. **Other Requirements** – All other requirements within the Subdivision Ordinance and Building Division regulations for approval of occupancy will apply.

2-9 **GUARANTEE AND WARRANTY –** The Contractor will guarantee and warrant all materials supplied as being fit for the purposes intended, and that all work performed as having been accomplished in a proper and workman-like manner.

Should any failure of materials and/or work occur within the warranty period, the Contractor will promptly make the needed repairs at the Contractor's own expense. Should such failure of work result in excessive maintenance by the City, or, in the opinion of the City, the failure is best left unrepaired, the Contractor will incur the additional maintenance cost. The cost will be equal to the annual maintenance cost divided by the current prime rate.

Should the Contractor not make or undertake the necessary repairs within 30-days of having received written notification from the City Engineer, the City may make the repairs, and the Contractor will pay the entire cost. If, in the opinion of the City Engineer, delay would cause a serious hazard to the public, or serious loss or damages, the repairs may be made without prior notice to the Contractor, and the Contractor will pay the entire cost. An immediate and reasonable attempt will be made to notify the Contractor of this emergency repair problem.

The procedure for review, repair and release of guarantee and warranty obligations will be:

A. **Subdivision Improvements & Encroachment Permit Improvements** – The guarantee and warranty will continue for a period of one-year after Notice of Completion for all work installed under a Subdivision Agreement or Encroachment Permit. The appropriate Subdivision Agreement or Encroachment Permit will be binding in its entirety.

This procedure will be followed for the completion of the guarantee and warranty period for the improvements:

1. **City's Responsibility** – The City Engineer will notify all necessary City departments to complete their guarantee and warranty inspections during the tenth or eleventh month following the Notice of Completion. Each department will prepare and deliver a final punchlist to the City Engineer for delivery to the Contractor by the end of the eleventh month.

2. **Final Punch List** – Within 30-days of receiving the final punch list (during the eleventh or twelfth month), the Contractor will repair or address all items indicated. The City Engineer will notify all City departments that issued an original punchlist to re-inspect listed repairs.

3. **Legal Action** – Upon the City's approval of the repairs, the maintenance bond will be allowed to expire, at the conclusion of one-year following the Notice of Completion. If the Contractor does not complete the required work by the end of the twelfth month, the list of repairs will be referred to the City Attorney's office for further management.

B. Underground Warranty Work within City Street Right-of-Way – All Underground work done for repair, or as a result of the one-year warranty inspection, will comply with these requirements:

1. **Pavement Cutting** – Any cutting in City right-of-way will be requested to and approved in writing by the City Engineer. Restoration will be directed by the City Engineer and may include a complete road overlay of 0.2-foot minimum after the trenching and repair, or a complete road reconstruction to match existing surface. The restoration will depend on the extent of asphalt concrete patching necessary and the quality of the road surface. In no event will less than a slurry seal over the entire street width, in the area of the patches, be required.

2. **Backfill** – All backfill in City streets will be two-sack, concrete slurry per CalTrans Standard Specification 19-3.02E.

3. **Patching** – The asphalt concrete patch will conform to Standard Detail H-25.

4. **Closed Circuit TV and Mandrel Pipe Testing** – All main line and services lateral pipes for storm drain will be tested in accordance with Section 6-9 prior to acceptance of subgrade.

2-10 CONTRACTOR AND DEVELOPER DETAILS – Refer to Detail CD-1 for the required signature block detail information.

[THIS PAGE INTENTIONALLY LEFT BLANK]

CITY OF LINCOLN DEPARTMENT OF PUBLIC WORKS				
CITY ENGINEER APPROVAL:			DATE:	
STREETS	GRADING	SEWER	WATER	DRAINAGE

IMPROVEMENT PLANS

CITY OF LINCOLN DEPARTMENT OF PUBLIC WORKS		
APPROVED	STREET LIGHTS	DATE

SUBDIVISION STREET LIGHT PLANS

APPROVED BY:		
	WATER	DATE

SUBDIVISION WATER DISTRIBUTION PLANS

(ADD TO WATER PLANS ONLY)

REVISIONS	NO.	DESCRIPTION	CITY APPROVAL	
			APPROVED BY	DATE

1" MIN. | $\frac{1}{2}$" MIN.

PLAN REVISION

CITY OF LINCOLN DEPARTMENT OF PUBLIC WORKS		
APPROVED	ENCROACHMENT	DATE

ENCROACHMENT PLANS

NOTES:

1. TO BE PLACED ADJACENT TO SIGNATURE BLOCK ON TITLE SHEET.
2. TO BE PLACED ON ALL SHEETS WHICH INCLUDE THE REVISION.

CITY OF LINCOLN
ENGINEERING DEPARTMENT

SIGNATURE BLOCKS

REVISIONS:	DATES:	APPROVED:
		CITY ENGINEER DATE

SCALE: NONE
DATE: SEPTEMBER 2019
DRAWN BY: C.G.

CD-1

[THIS PAGE INTENTIONALLY LEFT BLANK]

SECTION 3

STREETS AND HIGHWAYS (H)

3-1 General H-1
3-2 Connection to Existing Improvements H-2
A. Cuts in Existing Streets H-2
B. Street Widening H-2
C. Existing Stub Street Connection H-3
D. Existing Utility Connection Including Hot Taps H-3
3-3 Construction Staking H-3
3-4 Utility Relocation H-3
3-5 Trench Work H-4
A. Existing Surface H-4
B. Water in Trench H-5
C. Unsuitable Trench Bottom H-5
D. Open Trench H-5
E. Steel Trench Plates H-6
F. Temporary Surfacing H-6
3-6 Utility Trench Backfill QA/QC H-6
A. Performance Based QA/QC (Non-Testable Materials) H-6
B. Design Based QA/QC (Testable Materials) H-6
C. Trench Backfill Material H-7
1. Type “A” Material H-7
2. Type “B” Material H-7
3. Type “C” Material H-7
4. Type “D” Material H-7
5. Type “E” Material H-7
D. Pipe Zone Backfill H-8
E. Compaction Test Methods H-8
F. Testing Frequencies H-8
G. Manhole Structure Backfill H-9
3-7 Roadway Construction H-9
A. Pavement Design Methods H-10
B. Wet Weather Construction Extended Warranties H-10
C. Trench Backfill Material H-10
D. Roadway Base H-11
E. Native Soul Subgrade H-11
1. Scarification and Moisture Conditioning H-11
2. Subgrade Treatment H-11
3. Grading H-11
4. Compaction H-12
5. Stability H-12
F. Aggregate Base (AB) H-12
1. Thickness H-13

2. Grading H-13
3. Compaction H-13
4. Stability H-13
G. Concrete Curb, Gutter and Sidewalk H-14
1. Thickness H-14
2. Reinforcing H-14
3. Finishing H-15
4. Sidewalk Access Ramps H-15
5. Expansion joints, deep tool joints and score marks H-15
6. Grades H-16
7. Monolithic Sidewalk, Curb and Gutter H-16
8. Under Sidewalk Drainage Pipe H-16
9. Curb and Gutter Installation In An Existing Street H-16
10. Epoxy Work H-17
11. Median Noses H-17
H. Asphalt Concrete H-17
1. Construction H-17
2. Testing H-18
I. Raisin Iron to Finished Grade H-19
J. Final Seal Coat in Residential Area H-20
K. Crack and Joint Sealing H-21
L. Sound and Retaining Walls and Graffiti Coating H-21
M. Street Barricades H-21
N. Street Signs H-21
O. Street Sign Posts H-21
P. Survey Monuments H-22
3-8 Traffic Stripes and Pavement Markings H-23
A. Removal of Existing H-23
B. Application H-23
C. Thermoplastic Material H-23
D. Pavement Markers H-24
3-9 Materials H-25
A. Aggregate Base H-25
B. Asphalt Concrete H-26
C. Concrete H-26
D. Concrete Additives H-26
E. Lime H-26
F. Truncated Domes H-27
G. Expansion Joint Filler H-27
H. Graffiti/Anti Graffiti H-27
I. Filter Fabric H-27
J. Pavement Reinforcing Fabric H-27
K. Controlled Density Fill H-27
L. Sign Posts/metal H-28
M. Pavement Markers H-28
N. Seal Coast H-28
O. Asphalt Surface Crack and Joint Sealant H-28
P. Thermoplastic Stripes and Pavement Markings H-28
3-10 Streets and Highways Details H-29

.

SECTION 3

STREETS AND HIGHWAYS (H)

3-1 **General** – Construction within the City of Lincoln will be approved and permitted by the City, and will conform to the City of Lincoln Design Criteria & Procedures Manual. Street improvements include: barricades, bikeways, bridges, bollards, curbs, driveways, gutter depressions, island paving, pavement, sidewalks, sidewalk access ramps, signs, survey monuments, traffic stripes and pavement markings, trenches, and tunnels. These improvements will be installed in strict accord with the approved project improvement plans; the City of Lincoln Public Facilities Improvement Standards; and certain sections of the latest editions of the Caltrans Standard Plans and Caltrans Standard Specifications.

Should conflicts arise between documents, the approved project improvement plans will govern over these Public Facilities Improvement Standards. These Public Facilities Improvement Standards will govern over the Caltrans Standard Specifications. In case of conflict between applicable documents and/or plans, the most restrictive will prevail.

The manufacturer's guidelines for all materials to be used on the project will be present at the construction site at all times for reference.

The Developers and Contractors will comply with all applicable City, County, State, and Federal laws and regulations relating to construction of the improvements as required.

If the City Engineer determines that any work on private or public property constitutes a hazard to the health, safety, or welfare of the public; endangers property; adversely affects the safety, use or stability of adjacent property; an overhead or underground utility, or a public way, watercourse or drainage channel; or could adversely affect the air quality; or the water quality of any water bodies or water courses; the City Engineer may issue a stop work notice to the owner of the property upon which the condition is located, or other person or agent in control of such property. Upon receipt of such stop work notice, the recipient will, within the period specified therein, stop all work, obtain any necessary permits and conform to the requirements identified in the stop work notice. The City Engineer may require the submission of plans or other reports, detailed construction recommendations, studies, or other engineering data prior to and in connection with any corrective or proposed work or activity.

All improvements within the City of Lincoln will be performed by a contractor licensed in accordance with the California Contractors State License Law, Business and Professions Code Section 7000 et seq.

All persons, firms, partnerships, or corporations doing business of any nature in the City of Lincoln must have a current Business License as stated in Chapter 5.04-License Tax, City of Lincoln Municipal Code. This includes developers, engineers, and contractors.

Please refer to the City of Lincoln's Design Criteria & Procedures Manual for design information such as current street classes and design widths.

All projects will be in compliance with the State water quality requirements for erosion and sedimentation control at all times.

3-2 **CONNECTION TO EXISTING IMPROVEMENTS** – Before connecting to existing improvements, these conditions will be met:

A. Cuts in Existing Streets – Before any cuts are made in an existing City street/right-of-way by anyone other than the City of Lincoln, the City Engineer will receive a written request accompanied by a set of the proposed plans for an Encroachment Permit (Refer to the City of Lincoln Website for the Encroachment Permit Application).

If the planned cut is shown on the approved project improvement plans, no Encroachment Permit is required, but the City Engineer will receive notification 48-hours prior to beginning any work on the proposed project.

On paved surfaces less than 5-years old, with high quality riding surfaces, no pavement cutting will be permitted for transverse or longitudinal trenches, and installations will be by boring and jacking only. Any exceptions will be requested in writing to the City Engineer, and will require additional mitigation requirements as determined by the City Engineer, up to grinding and overlay for full width of roadway. Refer to Standards Detail H-25.

B. Street Widening – When widening is necessary to complete an existing partial street along a development project, the Developer/Contractor will be responsible for saw cutting and removing a narrow strip along the outside portion of the pavement. This will provide a clean and stable pavement section for constructing the new street and will be aligned with a centerline, lane line or fog line of finished roadway. The width from centerline will be shown on the approved project improvement plans.

C. **Existing Stub Street Connection** – The Developer/Contractor will be responsible for removing and reconstructing a maximum of 50-feet of the existing roadway to make a satisfactory connection. The City Engineer will determine the exact dimension.

D. **Existing Utility Connection Including Hot Taps -** If it is necessary to connect to an existing utility, the connection will be made as specified on the approved project improvement plans; the Public Facilities Improvement Standards and appropriate Detail; or as directed by City Engineer; and with direction from the owner of the utility. All connections will be made by the contractor with oversite by the City Engineer of his/her representative.

3-3 **CONSTRUCTION STAKING** – Construction staking will be provided by the Developer for all improvements. The City Engineer will be given two sets of cut sheets prior to construction.

Staking will provide the station, the offset, and the cut to the nearest hundredth of a foot for concrete and paving, and to the nearest tenth of a foot for rough grading. Stakes will be provided at a minimum of every 50-feet in tangent sections and every 25-feet in curved sections. Vertical curves will be staked every 25-feet. Horizontal curves will be staked every 200-feet. Monuments will have straddle ties placed.

For other utility installations within City rights-of-way, please refer to the specific sections in these Public Facilities Improvement Standards for additional staking requirements.

3-4 **UTILITY RELOCATION** – Existing utilities interfering with the approved installation will be removed, reset, relocated, adjusted, or otherwise managed as specified on the approved project improvement plans; the Public Facilities Improvement Standards and appropriate Details for utility crossings and installation; or as directed by the City Engineer; and with direction from the owner of the utility.

If the utility is the property of a public utility or franchise, such owner will be notified by the City Engineer to relocate the utility within a specified reasonable time. The Contractor will not interfere with such timidities until after the expiration of the time specified, and then only with written direction from the City Engineer.

No work will occur within the road right-of-way prior to completion of the conflicting utility relocation. Utilities damaged during construction will be

repaired with direction from the owner of the utility. Patching of damaged surface areas will not be allowed, but will be removed and replaced to the satisfaction of the City Engineer.

3-5 **TRENCH WORK** – Existing utilities interfering with the approved installation will be removed, reset, relocated, adjusted, or otherwise managed as specified on the approved project improvement plans; the Public Facilities Improvement Standards and appropriate Details for utility crossings and installation; or as directed by the City Engineer; and with direction from the owner of the utility.

Refer to the Public Facilities Improvement Standards Section for additional information on the specific type of trench. Section 4 Domestic Water Supply System; Section 5 Sanitary Sewer System; Section 6 Storm Drainage; Section 8 Landscaping and Irrigation; Section 9 Street Lighting, Signals, and Electrical Systems; Section 10 Recycled Water System.

A. Existing Surface – When the trench is in an existing surfaced area, the pavement will be sawed or scored and broken ahead of the trenching operations. The pavement will be cut accurately on neat and parallel lines. Before the final asphalt concrete patch is placed, the edges of the asphalt concrete will be re-sawcut at least one-foot wider than the width of the trench ("T trench") to create smooth parallel edges. All cuts in Portland cement concrete pavements will be sawcut with approved equipment. Refer to Standard Detail H-25.

B. Water in Trench – When water is encountered in the trench, the geotechnical engineer will be contacted to provide input to the City Engineer. The trench will be kept dry in a manner approved by the City Engineer until the placing of the approved bedding material, laying and jointing of the pipe, and placing of the shading material has been completed and approved. The City will consider, on a case-by-case basis, the use of conventional, in trench, sump dewatering methods provided that the trench is backfilled with washed, crushed rock or equivalent to at least a height of 3-feet higher than the local ground water table or perched water whichever is at a higher elevation. The crushed rock may require wrapping with a geotextile filter fabric depending upon the expected ground water flow velocities. Installation of ground water monitoring wells can be used to determine the elevation of the water table and/or perched ground water.

The City requires a dewatering system be designed and implemented in all areas where trenches will be excavated and native backfill will be placed below the local groundwater table and/or perched ground water. Installation

of groundwater monitoring wells can be used to determine the elevation of the water table and/or perched ground water. The dewatering system may include, but is not limited to: driven well point screens and vacuum extraction systems, drilled and installed screened wells with submersible pumps or vacuum extraction systems, or other dewatering methods. Use of in trench sumps will not be allowed as the sole dewatering method. The owner's/developer's geotechnical consultant should develop a dewatering work plan for review and approval by the City prior to implementation.

The manner employed to dispose of water pumped from an excavation will be subject to the approval of the City Engineer and will conform to all water pollution constraints of the City and other agencies. Groundwater pumped from the trench will be disposed of in a manner to not cause injury to public or private property, or to constitute a nuisance or menace to the public.

C. **Unsuitable Trench Bottom** – If the bottom of the trench is soft, yielding, or otherwise unsuitable as a foundation for the pipe in the opinion of the geotechnical engineer, or City Engineer, the unsuitable material will be removed to the depth necessary to provide a stable and satisfactory foundation. Three-quarter inch crushed rock will be placed in the trench to provide a stable foundation. All rock will be wrapped with geotextile fabric (see Section 3-6Type “C” material).

D. **Open Trench** – The trench will be in a safe condition at all times. In roadway areas and locations accessible to the public, trenches will be excavated only as far in advance of pipe laying as can be backfilled in the same day. In addition, the maximum total length of open trench should be no more than 300-feet ahead of the pipe laying operation, or 200-feet behind the pipe laying operation. A trench in an existing roadway that is not to be regraded is defined as “open” until backfilled to subgrade or the original ground line.

E. **Steel Trench Plates** – Steel trench plates will not be used over open trench areas without the approval of the City Engineer. All steel plates will be adequately restrained to eliminate shifting. Trench plates do not eliminate the need for shoring when required. Temporary asphaltic plant mix ("cut-back") at least one-foot in width will be used for a transition on each edge of the plate. "Rough Road" or "Bump" signs will be installed 200-feet on each side before the steel plate. The sign will only be mounted to an operable, lighted barricade for a maximum of 24-hours. The sign will be mounted to a 4-inch x 4-inch post if the placement exceeds 24- hours.

F. **Temporary Surfacing** – A temporary asphaltic plant mix "cut-back" surface not less than 2-inches in thickness will be placed immediately after the top backfill has been completed and compacted. This temporary surface will be maintained at a level surface until removal. The temporary surface will be removed just prior to placing the permanent surface material.

3-6 **UTILITY TRENCH BACKFILL QA/QC** – Construction quality assurance and quality control (QA/QC) of all utility trench backfill will be performed by the owner's/developer's geotechnical engineering consultant. A performance based QA/QC specification will be developed and used for placement and compaction of all non-testable trench backfill materials. A design based QA/QC specification will be used for placement and compaction of all testable trench backfill material.

A. **Performance Based QA/QC (Non-Testable Materials) –** Non-testable trench backfill materials generally consist of locally derived mixtures of cobles with a sandy matrix and/or breccia (volcanic rock) with a sandy matrix. These non-testable backfill materials should have a maximum particle size of 6-inches (greatest dimension). Use of non-testable trench backfill materials will be approved by the City on a case-by-case basis.

A performance-based specification criteria will be used to evaluate the suitability of placed and compacted non-testable trench backfill materials. The property owner's/developer's geotechnical engineering consultant must prepare a work plan that describes a proposed site-specific performance based specification for review and approval by the City prior to commencement of work. The work plan must include, but not be limited to:

1. Maximum loose lift layer (layer thickness) prior to compaction.
2. Moisture content range to be achieved prior to compaction.
3. Minimum number of passes and coverage of specified compaction equipment.
4. Specified compaction equipment to be used.

B. **Design Based QA/QC (Testable Materials) –** Testable trench backfill materials generally consist of on-site native earth materials and imported earth materials that can be classified as soils according to the American Society for Testing Materials (ASTM) Unified Soils Classification System guidelines procedures (ASTM D2487 and D2488). These soils materials can be easily tested to determine if they meet the project design based on QA/QC specification for percent relative compaction by the following ASTM test methods:

ASTM D1556, Standard test method for in place density and unit weight of soil and soil-rock mixtures by the Sand-Cone Method.
ASTM D2922, Standard test method for in place density and unit weight of soil and soil-rock mixtures by the Shallow Depth Nuclear Method.
ASTM D3017, Standard test method for in place water content of soil and soil-rock mixtures by the Shallow Depth Nuclear Method.

C. **Trench Backfill Material –** The City requires designed based construction QA/QC testing and observation services to be performed by the owners/developer's geotechnical engineering consultant to document that trench backfills meet or exceed the minimum material properties and minimum relative percent compaction requirements of the City specifications. See specific utility sections for backfill requirements specific to each utility. The general trench backfill material types are presented below.

1. **Type "A" Material:** 3/8 inch minus imported screened sand with a minimum sand equivalent of 50 per CTM 217. All gradations are to be approved by the City prior to construction.

2. **Type "B" Material:** Class 2 Aggregate Base Rock per Caltrans Standard Specifications.

3. **Type "C" Material:** Material will consist of gravel or crushed rock. Material will be screened and non-washed with a minimum sand equivalent of 30 per CTM217. All material will be free of wood, roots, or other deleterious material. Material to be ½" minus for 12-inch pipe or smaller and ¾" for pipe greater than 12-inches in diameter. Groundwater conditions will require ¾" uniform crushed rock regardless of pipe diameter. Drain rock will be wrapped in a layer of geotextile fabric.

4. **Type "D" Material:** Crushed rock or soil-rock mixture (native) not to exceed 3 inches. Up to a 6 inch minus material may be used with special considerations and conditions approved by the City and Geotechnical Engineer. The material will be completely free of wood, roots, or other deleterious materials. Material not to be used within 24-inches of top of pipe without City Engineer's approval. Compaction will be by vibratory equipment or other approved devices. The City may require that the material be screened. A layer of geotextile fabric will be placed between the pipes and intermediate backfill zone. Material will only be used with geotechnical engineer's recommendation and with approval of the City Engineer.

5. **Type "E" Material:** A low strength, concrete slurry type backfill material made with a mixture of cement, fly-ash, and aggregate. To be used for intermediate zone backfill at depths greater than 5-feet below finished grade. For reference, refer to Section 3-9 "Materials".

D. **Pipe Zone Backfill –** Extreme care will be taken when consolidating the backfill around the pipe zone. For pipe 12-inches in diameter and smaller, no more than one-half of the pipe will be covered prior to shovel slicing (forcing rock backfill into the lower quadrants of the pipe) For pipe greater than 12-inches in diameter, no more than 6-inches will be covered prior to shovel slicing. Sufficient care will be taken to prevent movement of the pipe during shovel slicing. Shovel slicing will be witnessed by the City Engineer prior to shading the pipe. Proposed bedding, haunching and initial backfill (pipe backfill) materials will be approved by soils engineer and submitted to the Engineer with sieve analysis and sand equivalent test results. California Test Methods will include 216, 217, 301, and 302. Compaction equipment will not make direct contact with the pipe.

E. **Compaction Test Methods –** The percent relative compaction of all testable trench backfill soil will be determined by a combination of the following ASTM test methods:

ASTM D1557, Modified Proctor Compaction Curve.
ASTM D1556, In-place Soil Density By The Sand Cone Replacement Method.
ASTM D2216, Soil Moisture Content By The Convection Oven Method.
ASTM D2922, In-place Soil Density By Nuclear Method.
ASTM D3017, In-place Soil Moisture Content By Nuclear Method.
ASTM 04643, Soil Moisture Content By The Microwave Oven Method
ASTM D4959, Soil Moisture Content By The Direct Heating Method.

F. **Testing Frequencies –** All field testable trench backfill materials, that are classified according to the Unified Soils Classification System using ASTM D2487 and D2488 procedures as CL, ML, SC, SM, GC, GM, GP and GW by ASTM tests D422 (Particle Size Gradation) and D4318 (Atterberg Plasticity Indices), should be tested for percent relative compaction using a minimum frequency of one compaction test per maximum 12-inch-thick loose lift (layer) per 250-linear-feet of trench length or material change, whichever condition requires the greatest number of tests. Generally, minimum requirements include 12-inch loose lifts; moisture conditioned to at or above optimum moisture and compacted with 8 to 10 passes/lifts by a sheepsfoot wheel mounted on a Cat 225 or equivalent. In special circumstances, City may require other compaction equipment combined with thinner lifts.

All field testable trench backfill materials, that are classified according to the Unified Soils Classification System using ASTM D2487 and D2488 procedures as CL, CH, ML and MH by ASTM tests D422 (Particle Size Gradation) and D4318 (Atterberg Plasticity Indices), should be tested for percent relative compaction using a minimum frequency of one compaction test per maximum 12-inch-thick loose lift (layer) per 100-linear-feet of trench length or material change, which ever condition requires the greatest number of tests.

G. **Manhole Structure Backfill –** These notes and Detail SS-1A apply unless noted otherwise on the approved project improvement plans:

1. Only Caltrans Class 2 Aggregate (AB) Rock will be used as backfill to a minimum horizontal distance of 5 feet around all manhole structures constructed within the City right-of-ways. The Caltrans Class 2 AB Rock will extend vertically upwards from the pipe zone to the roadway structural section. Manholes installed at a depth greater than 5-feet will be backfilled with Type "E" Material to a depth of 5-feet below finished grade and to a horizontal distance of 5 feet around the manhole. Backfill between the Type E Material and roadway structural section will be Caltrans Class 2 Aggregate Base as described above.

2. The manhole structure backfill will be moisture conditioned to within ± 3 percentage points of the ASTM D1557 optimum moisture content, placed in maximum 12-inch-thick loose vertical lifts (layers), and then compacted with walk behind jumping jack type compactor equipment.

3. The manhole structure trench backfill will be tested in place to determine its moisture, density and percent relative compaction using the following American Society for Testing and Materials (ASTM) field and laboratory test methods: D1557 Modified Proctor compaction curve, D2922 density (nuclear method), D3017 moisture (nuclear method).

4. The manhole structure backfill will be compacted to a minimum relative compaction of 95 percent in the underlying bedding zone, and in the surrounding 5-foot horizontal zone extending from the bedding zone top to the bottom of the overlying AC pavement layer.

3-7 **ROADWAY CONSTRUCTION** –The City's goal is to provide high quality roads that are safe for public use and that have a reasonable service life with normal maintenance and repair costs. In order to better achieve this goal the City is

providing the following road pavement design guidance criteria. Roadway elements will be constructed according to these standards:

A. **Flexible Design Methods –** The City requires that both the Caltrans flexible-pavement design method (2010 Standards) and the American Association of State Highway and Transportation Officials (AASHTO) flexible-pavement design method be used to provide independent designs for all City roads. A comparison of the construction costs and estimated service life of the proposed roads should be included for both design methods. The current Caltrans methodology may be additionally required at City Engineer's request. The City will review the proposed road pavement sections, construction costs and estimated service lives generated by each design method prior to construction.

B. **Wet Weather Construction Extended Warranties** - City will require a minimum 5-year extended warranty for all roads constructed during the rainy winter months, due to the inherent higher risk for road failures. This criterion is based on the observation that roads constructed during the dry summer months generally have better long-term performance than roads constructed during the wet winter months. Additionally, road failures related to wet weather construction may not become evident until after the normal 1-year warranty has terminated. The City considers the rainy winter months to generally include, but not be limited to: November, December, January, February and March. The City reserves the right to apply, on a case-by-case basis, a minimum 5-year warranty to all roads if significant amounts of rain fall while constructing roads during other than the above-mentioned months.

C. **Drying Excessively Wet Subgrade Soil** - The City will allow the use of cement to be used to dry excessively wet subgrade soil; however, when these materials are applied for the purpose of drying excessively wet soil the City will not allow a reduction of the approved road section layers. High calcium lime will not be permitted. The City requires that a work plan for drying excessively wet subgrade soil be prepared by the owner's/developer's geotechnical engineering consultant. The work plan must be submitted to the City for review and approval prior to commencement of work. The work plan should address the following, but not be limited to:

    1. Methods and/or tests performed to establish the appropriate percent (by dry weight) of cement to be mixed (for drying) with the excessively wet soil.
    2. Methods to be used for applying and mixing the cement.

3. Methods to be used for whether the cement have been uniformly mixed into the subgrade soil to the specified depths and at the specified percentage.
4. Methods and/or tests to be performed to determine the vertical and lateral limits of the excessively wet soil be treated.

D. Roadway Base - Subbase, and aggregate base for the street and/or sidewalk, curb and gutter will not be placed until these items within the City street rights-of-way are completed:

1. Installation of underground domestic water, irrigation water, sewer, storm drain, and landscaping irrigation sleeves with all appropriate testing approved and accepted by the City Engineer.
2. Installation of underground dry utility crossings, including electric, natural gas, telephone, and cable TV systems with all appropriate testing of the trenching and backfill.
3. Backfill and compaction of all trenches with all appropriate testing approved by the designated geotechnical engineer and accepted by the City Engineer.

E. Native Soil - Subgrades for all pavements will be prepared to be stable, to the specified grades, and compacted to the required density. The work will comply with Section 19 of the Caltrans Standard Specifications and these requirements. Prior to acceptance of the pavement, the Geotechnical Engineer or an approved Testing Laboratory will verify compliance with these requirements. The compliance report will specifically indicate compliance with each of these requirements:

1. **Scarification and Moisture Conditioning** - The contractor will prepare the subgrade by scarifying the existing subgrade to a minimum depth of 6-inches, and moisture conditioning the soils to within +/- 2% of optimum moisture.
2. **Subgrade Treatment** - Cement treated mixture with native soils will be applied and compacted according to the approved plans, State Specifications, and these Standards. Pressure re-testing of the affected water lines will be required after treated subgrade work is approved.
3. **Grading** - The subgrade, after completion of the compaction, will be to the design grades within tolerances. The native subgrade will be graded to within 0.00-feet higher and 0.10-feet lower than the design grade. The grades will be verified by measuring from a string line between gutter, specified curb face, grade break, cross gutter, or other grade constraint, at intervals not to exceed 50-feet longitudinally and at the gutter lips,

centerline and quarter points. Additional checks will be made at each lane line. Areas not in compliance will be corrected and verified to be in compliance prior to the placement of aggregate base. The compliance and testing report will indicate that the subgrade has been verified in accordance with these requirements.

4. **Compaction -** The moisture-conditioned subgrade will then be compacted to 95% minimum relative compaction. Compaction tests will be tested using nuclear testing gauges in accordance with ASTM D1557, D2922 and D3017. In cases of highly variable soils, compaction tests will be taken using CTM 216 with a maximum density determination at each location if necessary. Compaction tests will be taken at the rate of one test location per each 5,000-square feet of pavement surface. Each street segment or cul-de-sac will have no less than 3 tests. Random test locations will be determined using either ASTM D3665 or CTM 375. Each test location will meet the minimum requirements. Any test location not complying with the minimum compaction requirement will be reworked until compliance has been achieved. The compliance and testing report will include all the sample location determination method, the location of each test based on the random sampling method used, a copy of the laboratory determination of the maximum density for each soil tested, and a summary of the test results.

5. **Stability** - The stability of the subgrade prior to the placement of aggregate base will be verified by wheel rolling. Wheel rolling will be performed with a fully loaded, 4,000-gallon water truck. In absence of a water truck, a fully loaded 10-wheel truck may be used. Wheel rolling will be performed in each travel lane and turn pocket. The pavement will not exhibit any movement or deflection under wheel loading. Any unstable areas will be corrected and retested. If geotextiles are used for stabilization, their location will be indicated on the record drawings. The compliance and testing report will indicate that the pavement was tested as required and either found to comply or was corrected and retested to verify stability. Correction methods and/or procedures for each unstable area will be fully described. The description will include locations of corrected unstable areas.

F. **Aggregate Base (AB) -** Aggregate bases will be 3/4-inch maximum Class 2 aggregate base and comply with Section 26 of the Caltrans Standard Specifications and these requirements. The Class 2 aggregate base may contain recycled asphalt concrete pavement and concrete. The recycled material will be clean and not contain deleterious materials including wood, plastic or metal. The aggregate base will comply with all of the applicable

quality requirements for Class 2 aggregate base. AC grindings will not be used directly for aggregate base.

1. **Thickness** – The minimum aggregate base thickness will be 4-inches regardless of native R-value.

2. **Grading** – The aggregate base subgrade, after completion of the compaction, will be to the design grades within tolerances. The aggregate base subgrade will be graded to within 0.02-feet higher and 0.03-feet lower than the design grade. The grades will be verified by measuring from a stringline between gutter, specified curb face, grade break, cross gutter, or other grade constraint at intervals not to exceed 50- feet longitudinally and at the gutter lips, centerline and quarter points. Additional checks will be made at each lane line. Areas not in compliance will be corrected and verified to be in compliance prior to the placement of asphalt concrete. The compliance and testing report will indicate that the aggregate base subgrade has been verified in accordance with these requirements.

3. **Compaction** – The aggregate base will be moisture conditioned to +/- 2% of optimum moisture and be compacted to 95% minimum relative compaction. Compaction tests will be tested using nuclear testing gauges in accordance with ASTM D1557, D2922 and D3017. Compaction tests will be taken at the rate of one test location per each 5,000 square feet of pavement surface. Each street segment or cul-de-sac will be have no less than 3 tests. Random test locations will be determined using either ASTM D3665 or CTM 375. Each test location will meet the minimum requirements. Any test location not complying with the minimum compaction requirement will be reworked until compliance has been achieved. The compliance and testing report will include all the sample location determination method, the location of each test based on the random sampling method used, a copy of the laboratory determination of the maximum density for each soil tested, and a summary of the test results.

   If recycled asphalt concrete pavement is incorporated as part of the aggregate base, the compaction test procedures will use oven-dried moisture for content determination.

4. **Stability -** The stability of the aggregate base subgrade prior to the placement of asphalt concrete will be verified by proof/wheel rolling. The proof/wheel rolling will be performed with a fully loaded 3000-gallon water

truck. In absence of a water truck, a dump truck of equal load may be used. Proof/wheel rolling will be performed in each travel lane and tum pocket. The surface will be not exhibit any movement or deflection under wheel loading. Any unstable areas will be corrected and retested. If geotextiles are used for stabilization, their location will be indicated on the record drawings. The compliance and testing report will indicate that the pavement was tested as required and either found to comply or was corrected and retested to verify stability. Correction methods and/or procedures for each unstable area will be fully described. The description will include locations of corrected unstable areas.

G. **Concrete Curb, Gutter and Sidewalk** - The supplier of any concrete will be Caltrans certified and will provide certification that any concrete furnished conforms to the proper specifications. The supplier will be able to furnish records of concrete cylinder tests for all proposed mix designs.

All concrete curbs, sidewalk access ramps, driveways, gutters, island paving, driveways and sidewalks will be installed in accordance with Sections 51 and 73 of the Caltrans Standard Specifications and related Caltrans Standard Plans; the Public Facilities Improvement Standards Details H-1 through H-6;and these standard provisions.

All concrete will be designated as Class A "six-sack concrete" unless called out specifically on the approved project improvement plans, where a 28-day minimum compressive strength and/or mix design will be noted.

The maximum allowable holding time before concrete placement will be 90-minutes from batch plant to pour.

1. **Thickness** – All residential and commercial sidewalks adjoining the Curb and gutter, and meandering bikeways, and/or sidewalks, will be a nominal minimum of 4-inches thick unless they cross commercial driveway locations where they will be a nominal 6-inches thick.

2. **Reinforcing** – All commercial driveways, including valley gutters and five-foot wide sidewalks in the A-6 driveways, will be a minimum of 6-inches thick, with reinforcement of deformed steel number 4, grade 60 rebar, on 18-inch centers each way as required by City Engineer. Wire for tying reinforcement in place will be No. 18 or heavier, AWG black annealed. Rebar will be set on 2-inch concrete dobies/rebar supports at 3-foot maximum spacing each way. The dobies will have wire ties that will be utilized to anchor the dobies to the rebar. Reinforcement will conform to

Caltrans Section 52. Any vertical rebar will have exposed ends covered with rebar caps.

3. **Finishing** – Concrete will not be placed or finished in the rain. It will be the Contractor's responsibility to schedule construction operations accordingly. Concrete will be cured in accordance with Caltrans Standards Section 90-1.03. All concrete work will be protected against damage and defacement from vandals or during subsequent construction operations. All gutters will be flow tested with water during the pour to assure proper drainage.

   All concrete surfaces will be completed with a medium broom finish unless otherwise specified. Surfaces to be used by pedestrian traffic will be broomed transversely to the line of traffic. If water is necessary, the water will be applied to the surface immediately before brooming.

   Concrete surfaces will not vary more than 0.02-foot from a 10-foot straightedge, except at grade changes. The finished surfaces will be free from blemishes. Alignment tolerances will be cause for rejection of the work.

4. **Sidewalk Access Ramps** – The City of Lincoln Public Facilities Improvement Standards Details H-5, H-5A, H-5B, and H-6 specify standard sidewalk access ramps used in the City. At all locations, sidewalk access ramps will utilize raised truncated domes. The type of sidewalk access ramp, the placement of raised truncated domes, and the scored/grooved sections will be placed as shown on the approved project improvement plans, as required by Title 24 of the Office of the State Architect, as shown in these Public Facilities Improvement Standards Details, and the Caltrans Standard Plans and Standard Specifications.

5. **Expansion joints, deep tool joints and score marks** – Expansion joints will be the full depth of the concrete and placed at 60 foot intervals, at curb returns in curb, gutter and sidewalk sections, and opposite expansion joints in adjacent curb. All barrier curb and valley gutters will include expansion joints at 60-foot intervals. Expansion joints will be filled with 3/8-inch thick pre-molded joint filler per the Caltrans Standard Specification Section 51-2.01 and ASTM D1751. Refer to Section 3-9 of these Construction Standards for expansion joint filler material requirements. Expansion joint filler will be shaped to fit the concrete that is being placed. Expansion joint material will not be placed against an existing or cured surface, but will only be set with wet concrete on both

sides. The concrete adjacent to expansion joints will be finished with an edger tool.

Deep tool joints and score marks will be placed at these intervals for the sidewalk widths indicated:

Required Spacing for Deep Tool and Score Mark

Sidewalk width	Deep Tool Spacing	Score Mark Spacing
4-feet	12-feet	4-feet
5-feet	10-feet	5-feet
6-feet	12-feet	6-feet
8-feet	8-feet	N/A
10-feet	10-feet	N/A

All deep tool joints will be 1-inch deep. A deep tool joint will be placed at the back of the curb for the total length of all monolithic curb, gutter, and sidewalk. All barrier and median curbs and valley gutters will include deep tool joints at 12-foot intervals.

6. **Grades** - All sidewalks (including portions through driveways and sidewalk access ramps) will be constructed with a minimum cross slope of 1% and a maximum of 1.5%.

   For access ramp landings, the maximum allowable grade is 1% minimum and 1.5% maximum, perpendicular to the street. Parallel to the street, the grade of the landing will conform to the longitudinal grade of the street.

7. **Monolithic Sidewalk, Curb and Gutter** - When possible, adjoining sidewalk, curb and gutter will be poured monolithically. When sidewalk, or curb and gutter is being placed against existing sidewalk or curb and gutter, dowels (#4 rebar grade 60, 12-inches long) will be installed at 12-inches on center 4-inches deep on each side.

8. **Under Sidewalk Drainage Pipe** – 1 1/2-inch or 2-inch PVC pipe may be placed under the sidewalk surface to carry water from landscape areas to the gutter, when approved by the City Engineer. The discharge end of the pipe will be flush with the face of curb and are only allowed in conjunction with a Type II vertical curb.

9. **Curb and Gutter Installation in An Existing Street** - In an existing street, a minimum width of 24-inches of existing asphalt concrete paving will be removed outside the proposed gutter lip and the lip poured against

a form board. The resulting patch between the gutter lip and the existing pavement will be 6-inches thick, or the thickness of the existing pavement, whichever is greater. If the joint is within 3 feet of a bike lane line or fog line, additional asphalt will be removed to the bike lane line or fog line.

10. **Epoxy Work** – Where concrete curb is epoxied to a concrete or asphalt concrete surface, a low viscosity paste polysulfide extended epoxy formula is to be used per Caltrans Standard Specification 95. 95% of the surface, below or within the boundaries of the curb, will be coated with this two-part epoxy. If extruded concrete curb is removed for pavement widening, the asphalt concrete pavement will be slurry sealed. Epoxy will be placed in conformance with the Caltrans Standard Specifications Section 95.

11. **Median Noses** - Median curbs are shown as Type 3 on the Public Facilities Improvement Standards Detail H-2 Curbs and Gutters. They will have 3 each Type D Pavement Markers - 2-way yellow retroreflective, as specified in Caltrans Specifications Section 85 Pavement Markers. These will be placed onto the face of the curb with the top edge of the Marker one-inch below the top edge of the curb at the mid-point of the curb nose radius and 2-feet left and 2-feet right of mid-point. The Pavement Markers will be cemented to the curb with Standard or Rapid Set Type epoxy adhesive in conformance with the manufacturer's instructions and the Caltrans Specifications Section 95.

H. **Asphalt Concrete** – Asphalt concrete pavement will be constructed as required in Section 39 of the either the 2010 or current edition of the Caltrans Standard Specifications and these requirements, as determined by the City Engineer

1. **Construction** - No prime coat will be required. Tack coat will be applied between each lift. Lifts placed on the same day will not require tack coating if the surface is not contaminated. All vertical edges of asphalt concrete and concrete facilities such as gutters, cross gutters, swales, etc. will be tack coated. If the tack coat is scraped off or contaminated, it will be reapplied.

   The minimum lift thickness will be 1½-inch for ½-inch material and 2¼ inches for ¾-inch material.

   The finished surface after rolling will be free of coarse and fine pockets. The handwork areas will closely match the texture of the machine laid mat.

All handwork areas will be compacted concurrently with breakdown rolling.

The average finished pavement thickness will be equal to or greater than the design thickness. The minimum pavement thickness will be the design thickness minus 1/4-inch for design pavement thickness of 2-inches or less; minus 3/8- inch for design pavement thickness between 2 and 4-inches; and minus 1/2-inch for pavement thickness of 4-inches or greater.

The provisions in Section 39-2.01, "Spreading and Compacting Equipment, of the Standard Specifications will apply. Asphalt Concrete and asphalt concrete base will be compacted to a relative compaction of 96.0 percent.

The temperature of the asphalt concrete ready for compaction will not be less than 120-degrees and all breakdown compaction will be completed before the temperature drops to 95-degrees. The atmospheric temperature will be at least 50-degrees to place asphalt concrete. If asphalt concrete base is shown on the plans, the atmospheric temperature will be at least 40-degrees to begin placement.

2. **Testing** – Asphalt concrete testing will be per the appropriate Caltrans standard (either current or 2010) as suitable for the pavement design utilized, and also as determined by the City Engineer. The testing requirement listed are therefore the minimum requirements.

   Asphalt concrete mixture verification tests will be performed at the rate of one set of tests per each 1,000-tons. A minimum of one test for each days paving will be performed. Asphalt concrete for mixture verification tests will be obtained in accordance with CTM 125. The location of each sample will be noted on the test report. The following mixture tests will be performed on each sample:

   Laboratory Compaction Unit Weight – CTM 304

   Hveem Stability – CTM 366

   Mix Voids - CTM 367

   Layer thickness will be verified either by continuous inspection or by coring. If continuous visual inspection is used, a minimum laydown thickness of 1.25 times the design layer thickness will be used. If verified

by coring, a randomly selected core for each 2,500-square feet of pavement area with a minimum of 3 for any street segment or cul-de-sac. The minimum compaction at any location will be 96.0%. Compaction will be verified either by nuclear gauge testing. Relative compaction will be determined by CTM 375.

One test will be taken for each 2,500-square feet of pavement area with a minimum of 3 tests per street segment. Each street segment may be averaged if the following number of test locations is met:

Pavement Area	Number of Tests
0 to 5,000-sf	3
5,001-sf to 10,000-sf	5
10,001-sf to 15,000-sf	8
Over 15,000-sf	10 or 1 per 2,500-sf

If test results in any area fall below the 96.0% minimum requirement by nuclear methods, the results will be verified by cores. Three cores will be taken approximately 10-feet away from the original test location. If the average of these three tests fail to meet the minimum, the pavement area will be cold planed to the depth of the underlying pavement course or aggregate base and will be replaced.

If the average pavement compaction fails to meet the 96.0% average requirement by testing using nuclear methods, cores will be taken at each test location and the compaction recomputed. The core test results will govern. If the core average fails to meet the average pavement requirement and the failure is due to one specific area of low test results, this low area will be removed and replaced. If no one distinct area can be isolated, the entire pavement layer will be removed and replaced for the full width of the pavement and to the limits of the failing segment.

Areas of coarse handwork or unacceptable joints will be reheated using an infrared heater and reworked until the work complies with these requirements. Skin patching will not be allowed.

Existing AC surfaces will be cut to a neat, straight line parallel with the street centerline and the exposed edge will be tacked with emulsion prior to paving. The exposed base material will be graded and recompacted prior to paving.

I. **Raising Iron to Finished Grade** – For appurtenances such as manholes and water valves that are in landscape areas, the top elevation/lid of the manhole or valve will be flush with the top of grass or to 1-inch maximum above the top of grass. In landscape areas using bark for cover, the top elevations/lid of that will be 2-inches minimum above the top of bark, to 4-inches maximum above the top of the bark.

In concrete or asphalt concrete areas, the iron will be raised to finished grade prior to the final concrete pour, or the last lift of asphalt concrete.

If maintenance or warranty work requires repair and/or removal of asphalt concrete around iron appurtenances, the replacement asphalt concrete will be ¾" per Caltrans Specifications.

J. **Final Seal Coat in Residential Area** – Prior to placement of traffic stripes and pavement markings, all new public streets will be sealed with a clay-stabilized emulsion designed to seal and protect asphalt pavement. (Refer to Section 3-9 N Materials in these Public Facilities Improvement Standards.) Sealing will be applied after the ambient temperature is 50°F. and rising. Should wet or freezing weather occur within 24-hours following application, the application will be redone.

Surface Preparation: All streets to be sealed will be cleaned and all debris will be removed prior to applying seal coat material. Oil spots will be treated with an oil spot primer to insure proper adhesion. All cracks will be blown clean with all debris removed prior to sealing. All cracks greater than ¼-inch wide will be sealed using a hot-applied crack sealant to the level of the adjacent areas. The crack seal material will contain no crumb rubber, and will have a softening point of at least 220°F. All cracks will be blown and cleaned of debris prior to sealing.

3-gallons of an industry-accepted latex such as Henry Duratuff or equal will be added to every 100-gallons of seal coat material directly into the applicator with the agitator running. The seal coat material with latex will be diluted with water at a rate of no more than 15% by volume for a more liquid, spreadable consistency. Once diluted, the material must have constant agitation to avoid separation of reinforcing material. The seal coat product will be applied following the label directions for application.

One coat is acceptable on new asphalt surfaces. Two coats will be applied to any street that is over two years old. A two-coat application will require an average of 30-gallons per 1,000-square-feet. The condition of the pavement

will determine the amount of material needed. For excessively rough areas, the City Engineer may request the addition of three-pounds of 30-mesh or 60-mesh sand to each gallon of Henry #127 DuraSeal.

K. **Crack and Joint Sealing** – All cracks and joints in asphalt concrete will be filled with Henry #93 DuroFlex (Hot Pour) Asphalt Crack and Joint Sealant or equal following application directions on the product label. (Refer to Materials in these Public Facilities Improvement Standards.)

L. **Sound and Retaining Walls & Graffiti Coating** – Construction of sound and retaining walls will conform to the approved project improvement plans for those sound and retaining walls to be owned and/or maintained by City. An anti-graffiti coating will be applied to the City side of all sound and retaining walls bounding the City right-of-way and owned and/or maintained by City. The City Engineer will be furnished a letter certifying that the coating has been applied, as these Public Facilities Improvement Standards require, prior to issuance of the Notice of Completion.

M. **Street Barricades** – All street and sidewalk barricades will conform to these Public Facilities Improvement Standards Details H-7, H-8, and H-9, respectively. For additional information, refer to Caltrans Standards Section 83 Railings and Barriers.

N. **Street Signs –** Street name signs and all other signage will be placed as shown on the approved project improvement plans, and Public Facilities Improvement Standards Details H-13, H-14, H-15, and H-16. Caltrans Standards Section 56-2 provides additional information.

Street name signs will be 9-inches high, 0.125” thick aluminum, and a minimum of 30-inches long. Panels will have 1/2-inch-rounded comers. The sign attachment will have two 5/16-inch aluminum drive rivets attached through each plate onto the post. The finish will be 3M or equal, VIP grade reflectorized white letters on a reflectorized navy blue background and/or as required by the City. The high intensity reflective sheeting will meet or exceed Caltrans Specifications. The street name letters will be 4-inches high, with the "CITY OF LINCOLN" letters one-inch high, and the street, avenue, etc. in 2-inch high letters. All letters will be upper case. Refer to the Public Facilities Improvement Standards Detail H-13 for exact placement and additional information.

(Please refer to the Materials Section in these Public Facilities Improvement Standards for additional information.)

O. Street Signs Posts – All sign posts will be a square metal tubing conforming to the standard specifications for cold rolled carbon steel, commercial quality, ASTM A446, or hot rolled carbon steel sheet, structural quality ASTM A570-90 & ASTM A653-94 structural grade 50. The steel will be hot dipped galvanized with 1.40-ounces of zinc coating (G-140), conforming to ASTM A653. The square end of the post can be pointed for easy penetration and will be capable of being driven into the ground by the use of an approved driving cap. Corner weld should be zinc coated after scarfing operation. This square post has holes and is coated with a polyester TGIC powder coat in a green gloss finish as supplied by Unit-Strut or Uni-Mate, or equal.

The holes will be 7/16-inches in diameter placed on one-inch centers on all four sides on the centerline for the entire length of the pole. The holes will be in true alignment and opposite each other directly and diagonally.

The finished posts will be straight and have a smooth uniform finish. All holes and ends will be free from burrs and the ends will be cut square. Permissible variation in the straightness is 1/16-inch in 3-feet.

Square tubes will be installed into a sleeve of the same material. A 30-inch long anchor sleeve will be embedded in Class B/Class 3, 5-sack concrete that is placed in an excavated hole a minimum of 30-inches deep and 6- inches in diameter. Two holes of the sleeve will remain showing above the finished grade, with all holes below grade taped closed. No material other than the square post will intrude into the sleeve. The square signpost inside the sleeve will move freely in the vertical direction after installation.

Signs will be securely anchored to the posts with theft-proof bolts, washers, and nuts.

4 x 4 redwood posts are allowable with prior approval of the City Engineer and will conform to Caltrans Specifications Section 56 for redwood posts and will be embedded in Class B, 5- sack concrete which is placed in an excavated hole a minimum of 36-inches deep and 6-inches in diameter.

(Please refer to the Materials section in these Public Facilities Improvement Standards for additional information.)

P. Survey Monuments –All street survey monuments will be installed as shown in Public Facilities Improvement Standard Detail H-24 except as otherwise shown on the approved project improvement plans. Surface monuments will be driven flush with the surface pavement. All lot property comers that are in

concrete sidewalks will be installed as shown in Public Facilities Improvement Standards Detail H-26 or as indicated on the recorded parcel or final map.

All rear lot property corners will be marked with a ½-inch rebar, 12-inches long, and the top flush with finish grade.

3-8 **TRAFFIC STRIPES AND PAVEMENT MARKINGS** – All traffic stripes and pavement markings will be installed in accordance with the approved project improvement plans and specifications, Caltrans Standards Sections 84, Caltrans Standard Plans, and the California MUTCD.

All traffic stripes and pavement markings on asphalt concrete will be thermoplastic material and conform to Section 84-2 of the State Standard Specifications. All thermoplastic striping and pavement markings will include glass beads.

A. Removal of Existing- Sandblasting of traffic stripes and pavement markings will not be permitted. Removal will be by grinding, or other methods approved in writing by the City Engineer. A rectangular area will be ground to prevent ghosting of the original markings.

B. Application - To remove all dirt and contaminants, mechanically wire brush existing surface that is to have the thermoplastic material applied. Portland cement pavement will be mechanically wire brushed or abrasive blast cleaned to remove all laitance and curing compound.

C. Thermoplastic material – Thermoplastic material will be applied only to dry pavement surfaces when the surface temperature is above 65°F / 10°C.

1. The primer recommended by the thermoplastic material manufacturer will be applied to all Portland cement concrete surfaces and all asphalt surfaces over 6-months old. The primer will be applied immediately in advance of, and concurrent with, the application of thermoplastic material. The application rate will be recommended by the primer manufacturer and will not be thinned.
2. Preheaters with mixers having a 360° rotation will be used to preheat the thermoplastic material. The thermoplastic material will be between 392°F/200° C and 428°F/220° C when applied to the pavement, unless the manufacturer recommends a different temperature.
3. The thermoplastic material will be applied by either spray or extrusion methods in a single uniform layer. Unless otherwise specified in special provisions, the thermoplastic material for traffic stripes will be applied at a

minimum thickness of 0.06-inch/1.5mm. Pavement markings will be applied at a thickness of 0.1 to 0.15-inch/2.5 to 3.8mm. The pavement surface will be completely coated by the material and the voids of the pavement surface will be filled.

4. Glass beads will be applied immediately to the surface of the molten thermoplastic material at a rate of not less than 8.5-pounds/4 kg. Per 100-square feet/10-square meters. The amount of glass beads· applied will be measured by stabbing the glass bead tank with a calibrated rod.
5. Metal stencils will be used when applying pavement markings.

D. Pavement Markers – All non-reflective pavement markers will be ceramic. Blue reflective markers will be placed on the centerline of any road in line with the fire hydrant location.

Nonreflective Pavement Markers: Use ceramic or plastic nonreflective pavement markers. Nonreflective pavement markers must be free from defects that affect adhesion, appearance, performance, or any combination thereof. The top, bottom, and sides of nonreflective pavement markers must be free from objectionable marks or discoloration. The top surface of nonreflective pavement markers must be convex with a gradual change in curvature. The bottom of nonreflective pavement markers must have areas of integrally formed protrusions or indentations. The bottom surface of the markers must not deviate more than 0.05 inch from a flat surface. The protrusion areas must have faces parallel to the bottom of the marker and must project approximately 0.04 inch from the bottom. When tested under CTM 669, properties of ceramic nonreflective pavement markers must comply with the requirements shown in the following table:

Test	Properties	Requirement
a	Bond strength	700 psi, min
b	Glaze thickness	0.007 in., min
c	Hardness	6 Moh, min
d	Luminance factor, Type A, white markers only, glazed surface	75, min
e	Yellowness index, Type A, white markers only, glazed surface	7, max
f	Color-yellow, Type AY, yellow markers only. The chromaticity coordinates must be within a color box defined in California Test 669	Pass
g	Compressive strength	1,500 lb, min
h	Water absorption	2.0%, max
i	Artificial weathering, 500 hours exposure, yellowness index	20, max

Retroreflective Pavement Markers: The exterior surface of a retroreflective pavement marker shell must be smooth and contain 1 or 2 retroreflective faces of the specified color. The base of a retroreflective pavement marker must be flat, rough textured, and free from gloss and substances that could reduce the adhesive

bond. The deviation of the base from a flat surface must not exceed 0.05 inch. When tested under CTM 669, retroreflective pavement markers must comply with the requirements shown in the following 2 tables:

Property	Requirement
Bond strength[a]	500 psi, min
Compressive strength[b]	2,000 lb, min
Compressive strength, recessed markers	1,200 lb, min
Abrasion resistance, marker must meet the respective specific intensity minimum requirements after abrasion.	Pass
Water soak resistance	No delamination of the body or lens system of the marker nor loss of reflectance
The Department rejects the entire lot of markers if: [a]Marker body or filler material fails before reaching 500 psi under the bond strength test [b]Deformation is more than 0.125 inchat a load of less than 2,000 lb or if delamination of the shell and filler material is more than 0.125 inch regardless of the load required to break a marker	

Reflectance	Specific Intensity		
	Clear	Yellow	Red
0° incidence angle, min	3.0	1.5	0.75
20° incidence angle, min	1.2	0.60	0.30
After 1 year field evaluation	0.30	0.15	0.08

3-9 **MATERIALS** – Roadway related materials will conform to these improvement standards:

A. Aggregate Base – All aggregate bases (AB) will be ¾-inch Class 2 and will comply with Section 26 of the Caltrans Standard Specifications. The Class 2 aggregate base may contain recycled asphalt concrete pavement and concrete. The recycled material will be clean and not contain deleterious materials including wood, plastic or metal. The aggregate base will comply with all applicable quality requirements for Class 2 aggregate base. AC Grindings will not be used directly for aggregate base.

B. Asphalt Concrete – Asphalt concrete will be Type "A" medium gradation. The maximum nominal aggregate size will be ½ inch for residential streets and ½ inch for collectors and arterials.

Asphalt concrete mixtures will meet these requirements in addition to the requirements of Section 39:

Mix Voids	Residential:	3 – 4.5 %
	Collector and Arterials:	3.5 – 5%
Stability	Residential:	35 min.
	Collector	37 min.
	Arterials:	40 min.
Coarse and Fine Durability		50 min.

The Mix Design and Asphalt Concrete "Certificate of Compliance" will be submitted to the designated Geotechnical Engineer for review. The submittal will then be forwarded to the City Engineer for approval.

C. Concrete – All concrete (curbs, gutters, sidewalks, etc) will be Class "A" (equivalent of 6-Sack, 564-pounds of cement per cubic yard mix, Type II) and will conform to provisions in Section 90 of the Caltrans Special Provisions, unless otherwise noted in the Public Facilities Improvement Standards Details. All concrete will be designed for a 28-day minimum compressive strength of 3000- psi.

D. Concrete Additives – Concrete additive will conform to the Caltrans Standard Specifications and will only be used upon the approval of the City Engineer.

E. Lime – Lime will conform to Section 24 of the State Specifications.

F. Truncated Domes – Truncated dome panels will be of vitrified polymer composite construction, embedded type, manufactured by Armor Tile Tactile Systems, Buffalo, New York, or approved equal. The dimensions and orientation of the truncated domes within the panel will conform to the approved project improvement plans.

G. **Expansion Joiner Filler** – The expansion/contraction joint filler will be 3/8-inch resilient non-extruding cellular fiber joint, uniformly saturated with asphalt, offering a minimum 70% recovery after compression. Joint filler to meet ASTM D1751, such as Sealtight Fibre Expansion Joint as manufactured by W.R. Meadows, Inc. or equal.

H. **Graffiti/Anti-Graffiti** – The coating will be Prosoco Graffiti Stop, two coat applications, Krystal Kote, Monochem Perma Shield Graffiti Control or approved equal.

I. **Filter Fabric** – Geotextile fabric used in trench backfill will conform to State Specification Section 96 for edge drains.

J. **Pavement Reinforcing Fabric** – Pavement reinforcing fabric will be non-woven polyester, polypropylene, or polypropylene/nylon materials conforming to these requirements:

ASTM D3776 – Weight, oz/sq. yd	3.0 to 8.0
ASTM D1117 – Grab Tensile Strength (1-inch grab), pounds	90 minutes
ASMT D1117 – Elongation at break, percent	40 minutes
ASM D461 – Fabric Thickness, mils	12 to 100

K. **Controlled Density Fill** – Controlled Density Fill will conform to these requirements:

Mix Components	Amounts	Volume (cu. Ft.)
28-day comp. Strength	100-psi	N/A
Slump	6 to 8-inches	N/A
Water	292 lbs/yd	4.68
Type 1 Portland Cement	25-pounds	0.13
Class F Fly ash	200-pounds	1.38
Concrete Sand	1442-pounds	8.79
Max 3/8-inch Aggregate	1600-pounds	9.32
Entrained Air	10% ± 3%	2.70
	TOTAL MIX VOLUME	27.00

L. Sign posts/metal – Uni-Strut, Uni-Mate, or equal, are square metal posts with holes that comply with the specifications. The posts will be produced utilizing a polyester TGIC powder coat in a green gloss. Refer to Public Facility Improvement Standards Detail H-13 and Section 3-7 O for additional information.

M. Pavement Markers – Type D yellow, reflective; Type G clear, reflective; Type AY yellow, non-reflective as specified in Section 3-8D.

N. Seal Coat – The asphalt-based seal coat material will be manufactured with a clay-stabilization emulsion. Henry #127 DuraSeal or equal will comply with these physical property requirements:

Cone Penetration	350-4450 (ASTM D-217)
Residue by Evaporation	60-70
Density	11.0-11.3 pounds per gallon

O. Asphalt Surface Crack and Joint Sealant – The crack and joint sealant material will contain no crub rubber, and will have a softening point of at least 220° F. Henry DuroFlex Crack and Joint Sealant or equal complies with this requirement.

P. Thermoplastic Stripes and Pavement Markings – The thermoplastic material will conform to either State Specification 8010-01A or 2010-19A. Glass beads will conform to State Specification 8010-004 (Type II).

Q. Backer Rod Specification – Backer rods and proper sealants will conform to State Specifications 41-5.02D.

STREETS & HIGHWAYS DETAILS

Cross Gutter *H-1*
Curbs & Gutters *H-2*
Modified Median Curb Detail *H-2A*
Commercial Driveways Type A-6 ..... *H-3*
Commercial Frontage Entrance *H-4*
Sidewalk Ramps for Curbs *H-5*
Sidewalk Ramps for Curbs *H-5A*
Sidewalk Ramps for Curbs *H-5B*
Typical Sidewalk Ramp Installation for Large Radius Curves *H-6*
Street Closure Timber Barricade *H-7*
Signs and Barricades at End of Pavement Widening *H-8*
Sidewalk Barricade *H-9*
Typical Sections Residential Streets *H-10*
Typical Sections Minor Arterial & Collector Streets *H-11*
Typical Sections Major Arterial & Frontage Roads *H-12*
Special Sections Street Classes "A", "B" & "C" *H-12A*
Street Sign Fully Reflective *H-13*
Street Name Sign Installation on Street Light Pole *H-14*
Street Name Sign Placement Details *H-15*
Street Name Sign Placement on Street Light *H-16*
Bus Turnout Details *H-17*
Bus Stop *H-18*
Cross Walk / Stop Bar Striping *H-19*
Site Distance Requirements for 84' Streets *H-20*
Site Distance Requirements for 94' Streets *H-21*
Planter and Barrier Curb Detail (A) *H-21A*
Alley Details and Driveway Transitions *H-22*
Visibility Requirements Residential Streets *H-23*
Boxed Survey Monument *H-24*
Utility "T" Trench in Existing Pavement *H-25*
Property Corner Marker Detail *H-26*
Standard Enclosure for Trash Bin *H-27*
Conduit for Future City Use *H-28*
Cul-De-Sac Details *H-29*
Hammer Head Design *H-30*
Planter and Barrier Curb Details *H-31*
90° Intersection Elbow *H-32*
Widening Details at Major Street Intersections *H-33*
Commercial Frontage and Driveway Regulations *H-34*
Utility Trench Cut-Off Wall *H-35*

[THIS PAGE INTENTIONALLY LEFT BLANK]

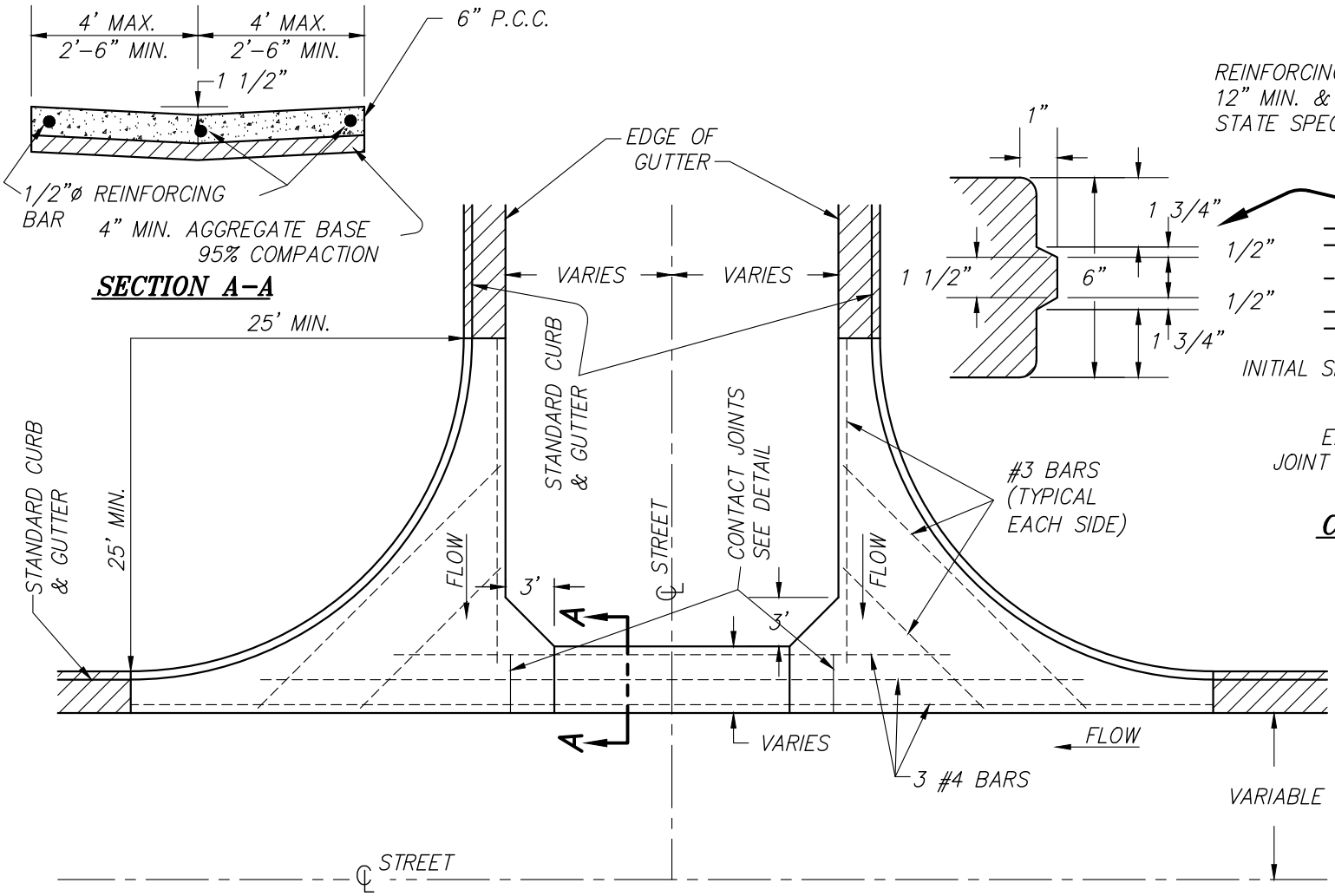

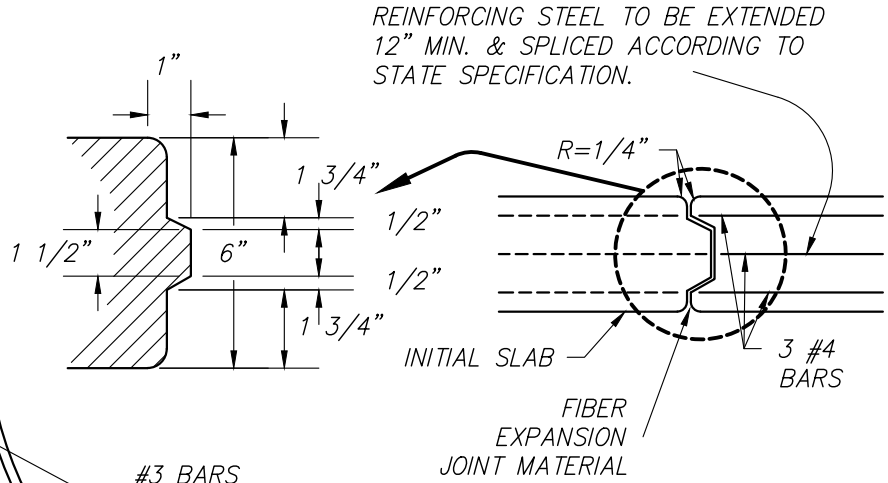

CONTACT JOINT DETAIL

NOTE: 4" MIN. AGGREGATE BASE TO BE PLACED WITHIN LIMITS OF CROSS GUTTER. (95% RELATIVE COMPACTION)

CITY OF LINCOLN
ENGINEERING DEPARTMENT

CROSS GUTTER

REVISIONS:	DATES:	APPROVED:
		CITY ENGINEER DATE

SCALE: NONE
DATE: SEPTEMBER 2019
DRAWN BY: C.G.

H-1

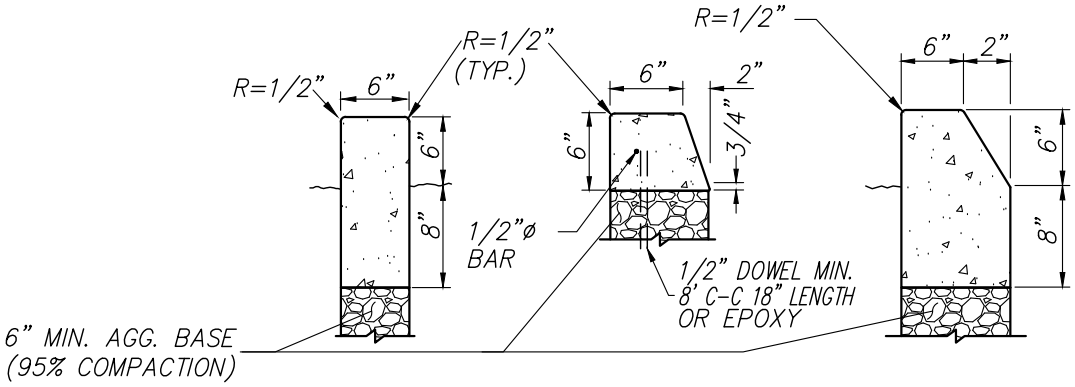

TYPE 3 **TYPE 4** **TYPE 5**

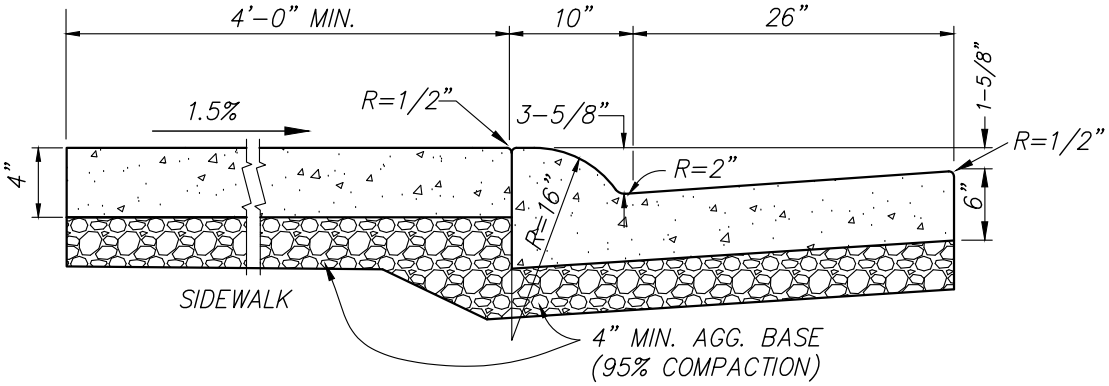

TYPE 1
ROLLED CURB

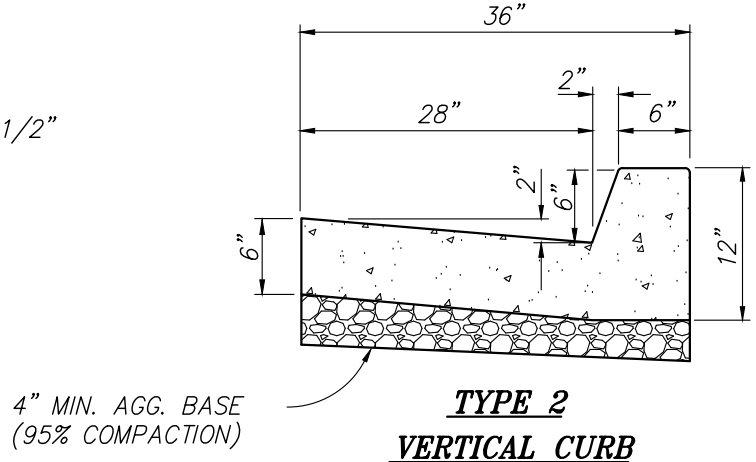

TYPE 2
VERTICAL CURB

NOTES:

1. LOCATE 1-1/2" DEEP SCORES AT 12 FOOT INTERVALS W/ 1/2" SCORES AT 4 FOOT INTERVALS. ALL CONCRETE TO BE CLASS A (6 SACK). COMPRESSION STRENGTH 3000PSI
2. CURB HEIGHT OTHER THAN 6" IS NOT DESIRABLE FOR TYPES 2, 3, 4, AND 5 AND SHALL BE SUBJECT TO APPROVAL OF THE CITY ENGINEER.
3. MEANDERING SIDEWALKS & BIKEWAYS SHALL INCLUDE 4" MIN AGGREGATE BASE

CITY OF LINCOLN
ENGINEERING DEPARTMENT

CURBS & GUTTERS

REVISIONS:	DATES:	APPROVED:
		CITY ENGINEER DATE

SCALE: NONE
DATE: SEPTEMBER 2019
DRAWN BY: C.G.

H-2

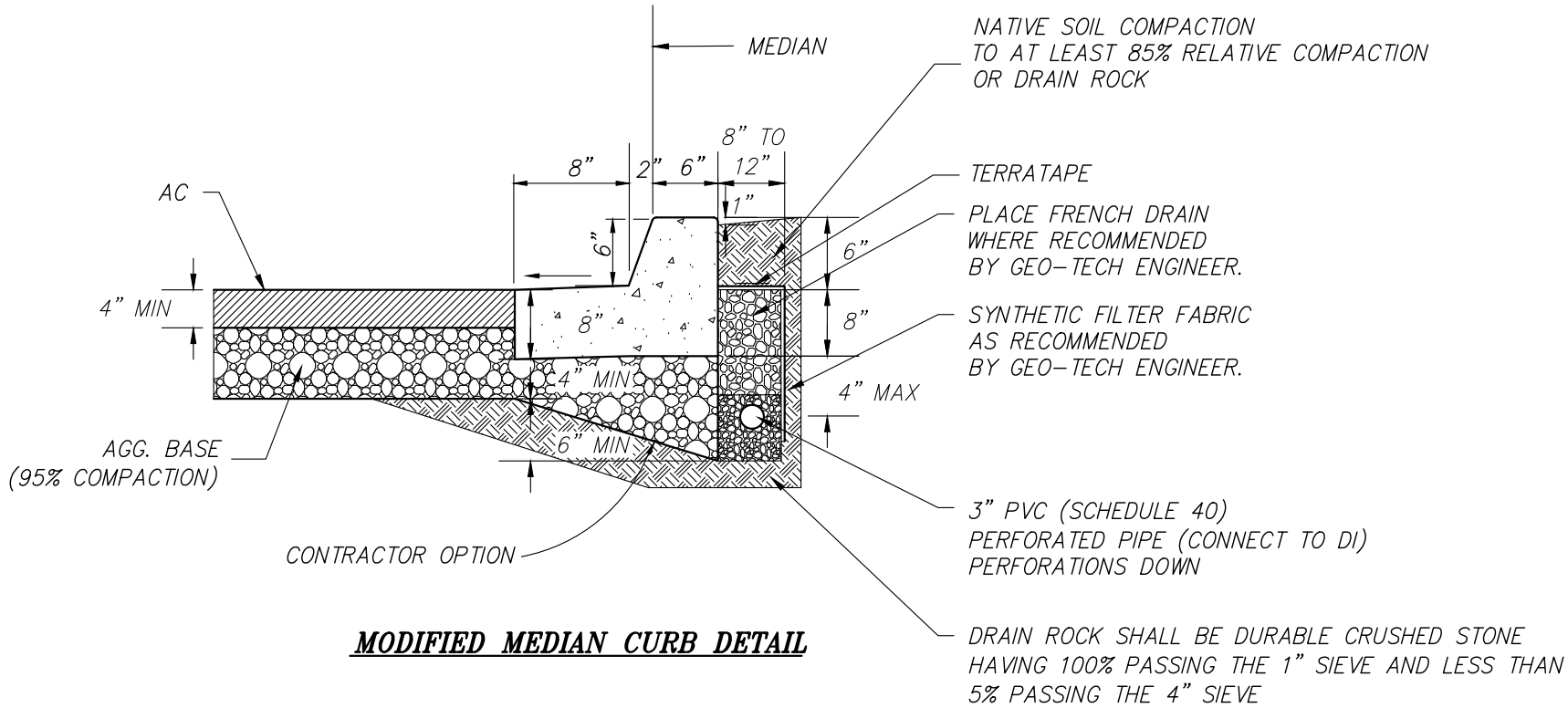

MODIFIED MEDIAN CURB DETAIL

NOTE:

A CLEANOUT OR RISER SHALL BE CONSTRUCTED AT THE BEGINNING OF ALL RUNS OF FRENCH DRAIN.

CITY OF LINCOLN
ENGINEERING DEPARTMENT

MODIFIED MEDIAN CURB DETAIL

REVISIONS:	DATES:	APPROVED:
		CITY ENGINEER DATE

SCALE: NONE
DATE: SEPTEMBER 2019
DRAWN BY: C.G.

H-2A

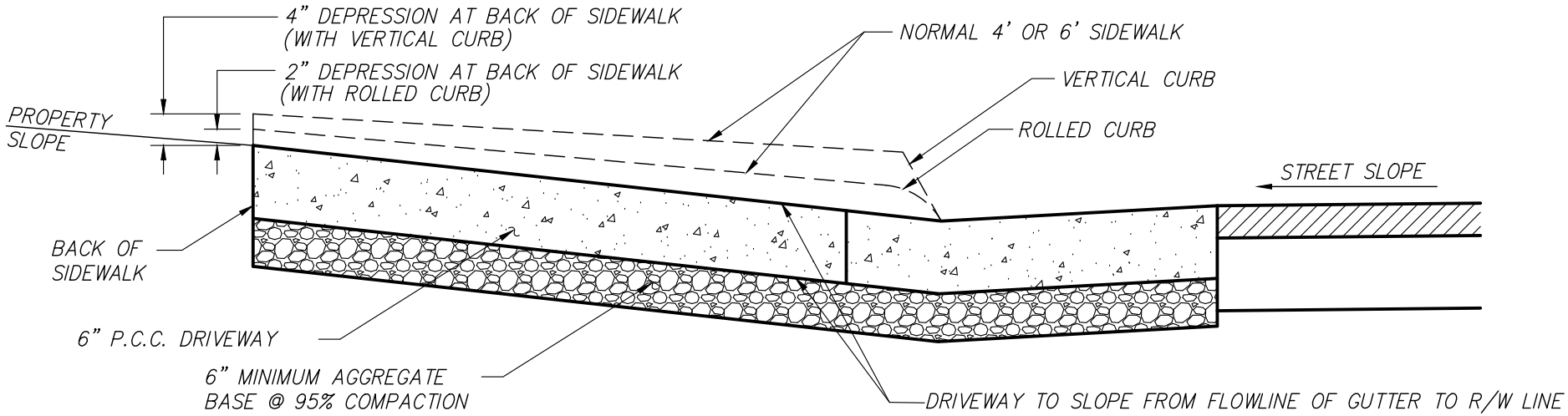

TYPICAL DRIVEWAY SECTION

NOTE: THE PROPERTY SLOPE FOR THE FIRST 20' FROM THE BACK OF THE SIDEWALK MUST BE DESIGNED SO THAT THE ALGEBRAIC DIFFERENCE OF THE PROPERTY SLOPE AND STREET SLOPE WILL NOT EXCEED 7% WITH VERTICAL CURB AND 10% WITH ROLLED CURB. IF PROPERTY SLOPE IS NEGATIVE, IT IS NOT TO EXCEED 5% FOR THE FIRST 20' FROM THE BACK OF THE SIDEWALK.

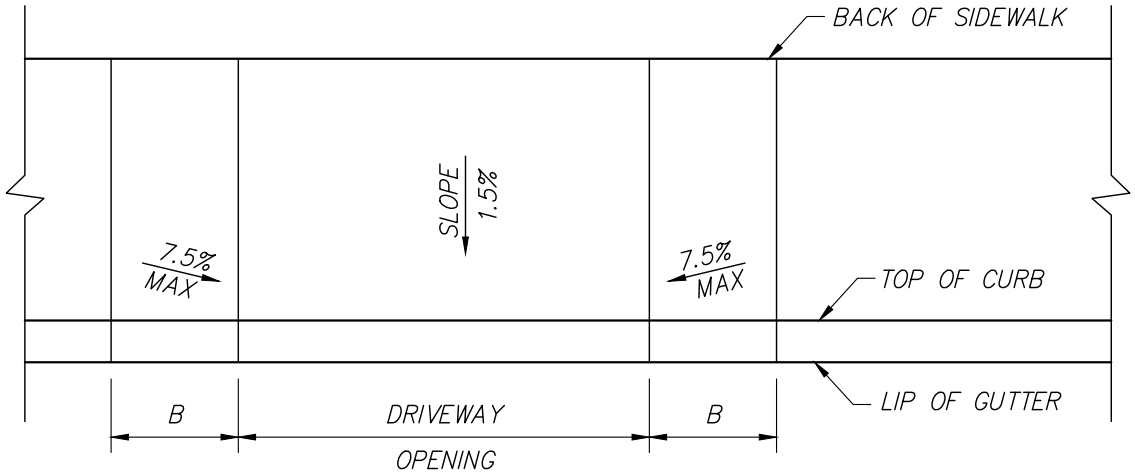

NOTES:

1. FOR CURB HEIGHT OTHER THAN STANDARD, THE MAXIMUM 7.5% SLOPE CONTROLS TRANSITION LENGTH A AND B.
2. ALL SUBGRADE WITHIN CITY RIGHT OF WAY SHALL BE SCARIFIED PROCESSED AND COMPACTED TO 95%

	TRANSITION
CURB TYPE	B
ROLLED	4'
VERTICAL	6'

REVISIONS:	DATES:	APPROVED:
		CITY ENGINEER DATE

CITY OF LINCOLN
ENGINEERING DEPARTMENT

COMMERCIAL DRIVEWAYS
TYPE A-6

SCALE: NONE
DATE: SEPTEMBER 2019
DRAWN BY: C.G.

H-3

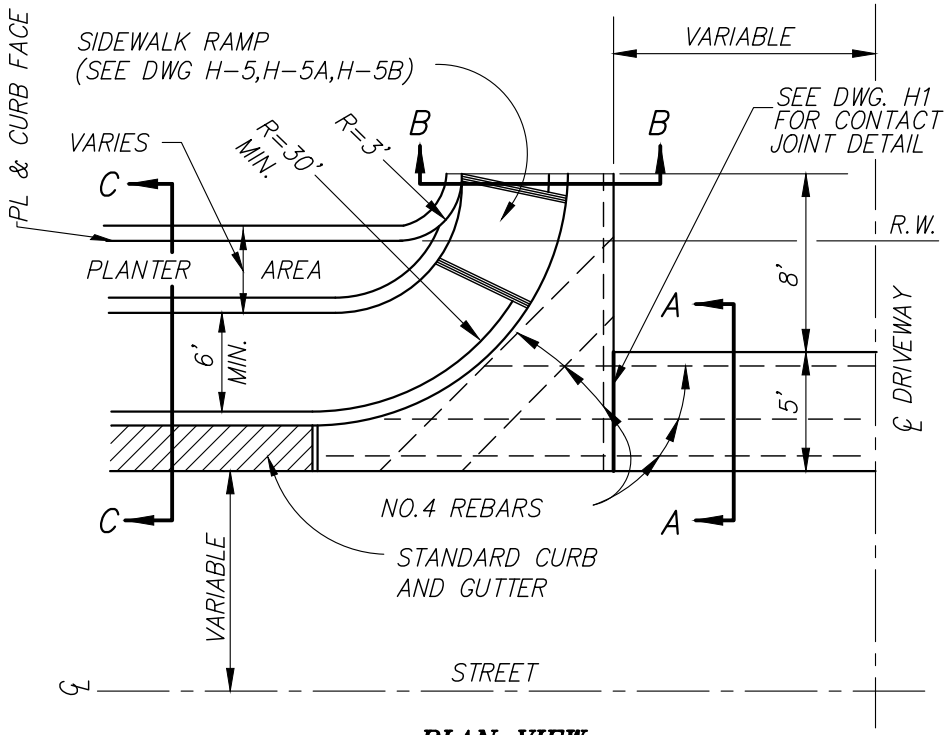

PLAN VIEW

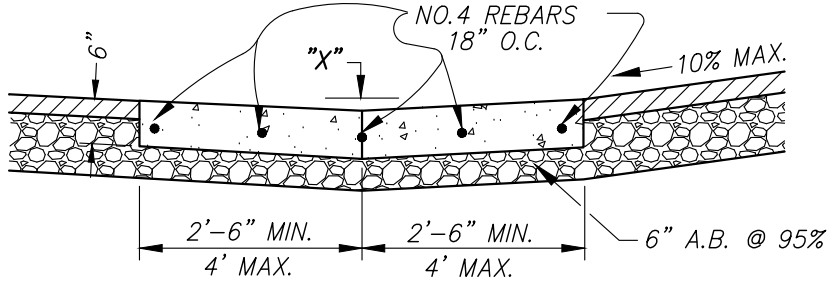

SECTION A-A

"X" = 1-1/2" FOR 5'WIDE X-GUTTERS
"X" = 2" FOR 8'WIDE X-GUTTERS

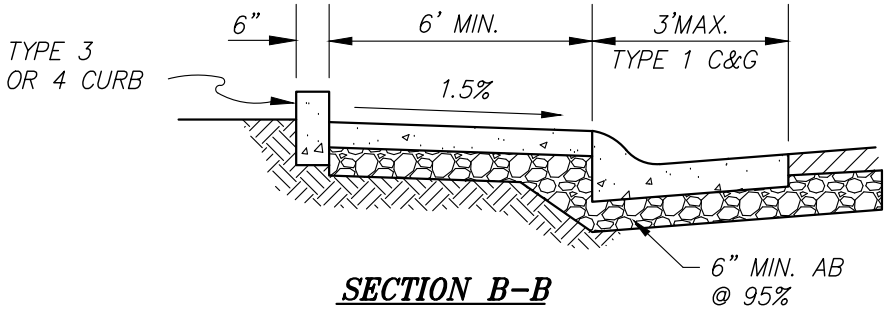

SECTION B-B

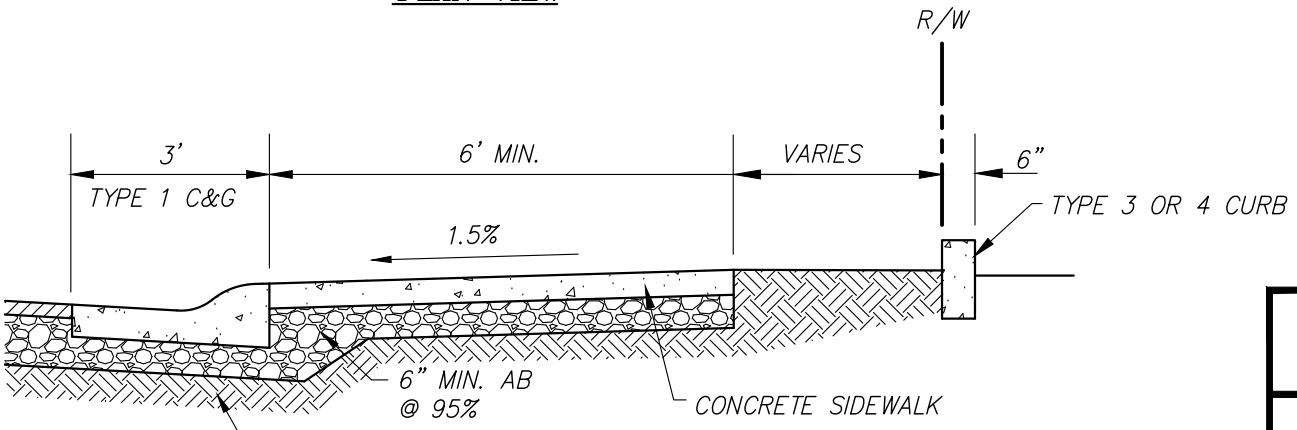

SECTION C-C

TOP 6" SUBGRADE
@ 95% (TYP. ALL C+G)

NOTES:

1. CROSS GUTTERS AND SPANDREL ARE REQUIRED FOR ALL COMMERCIAL ENTRANCES.
2. SEE STD. DWG H-1 FOR CROSS GUTTER DETAILS, H-21A FOR PLANTER DETAILS.

CITY OF LINCOLN
ENGINEERING DEPARTMENT

COMMERCIAL FRONTAGE ENTRANCE

REVISIONS:	DATES:	APPROVED:
		CITY ENGINEER DATE

SCALE: NONE
DATE: SEPTEMBER 2019
DRAWN BY: C.G.

H-4

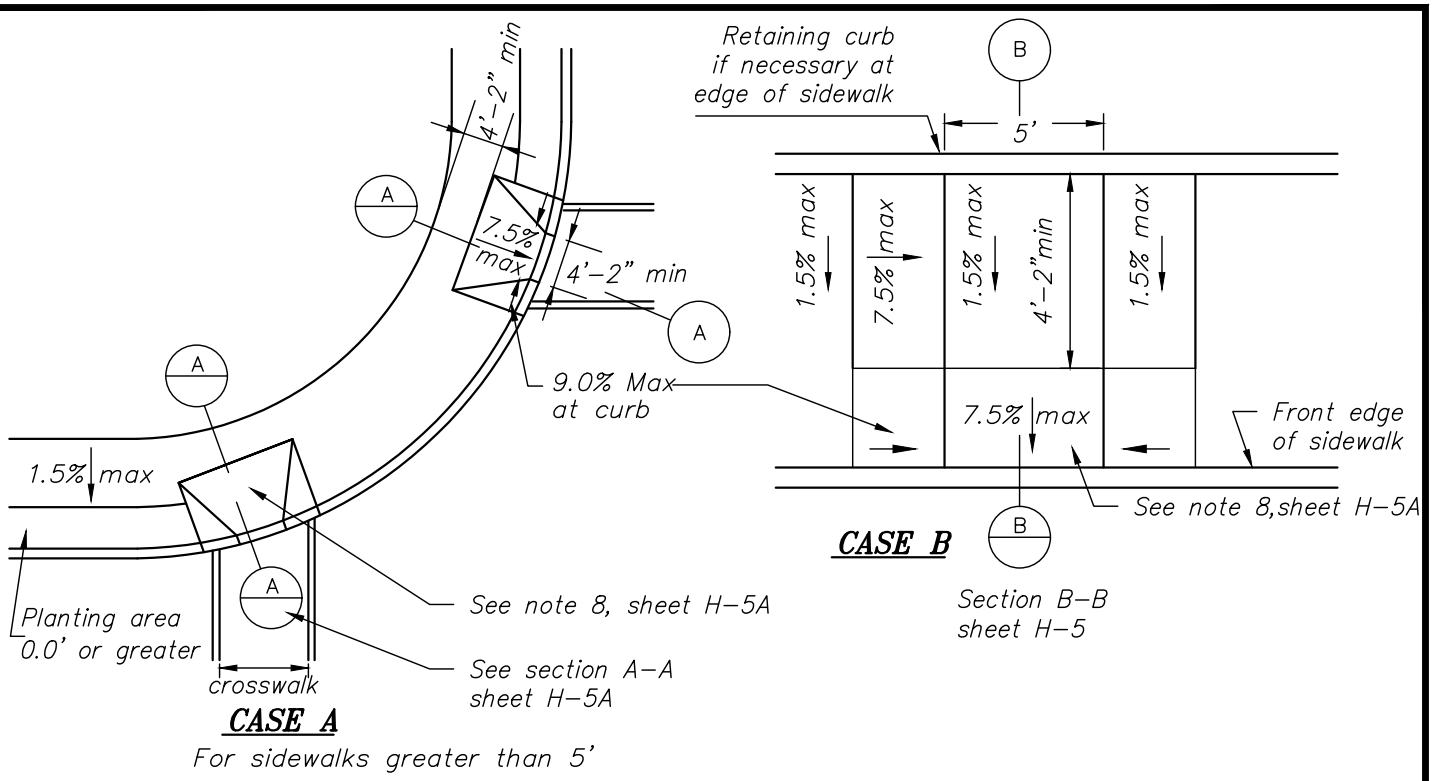

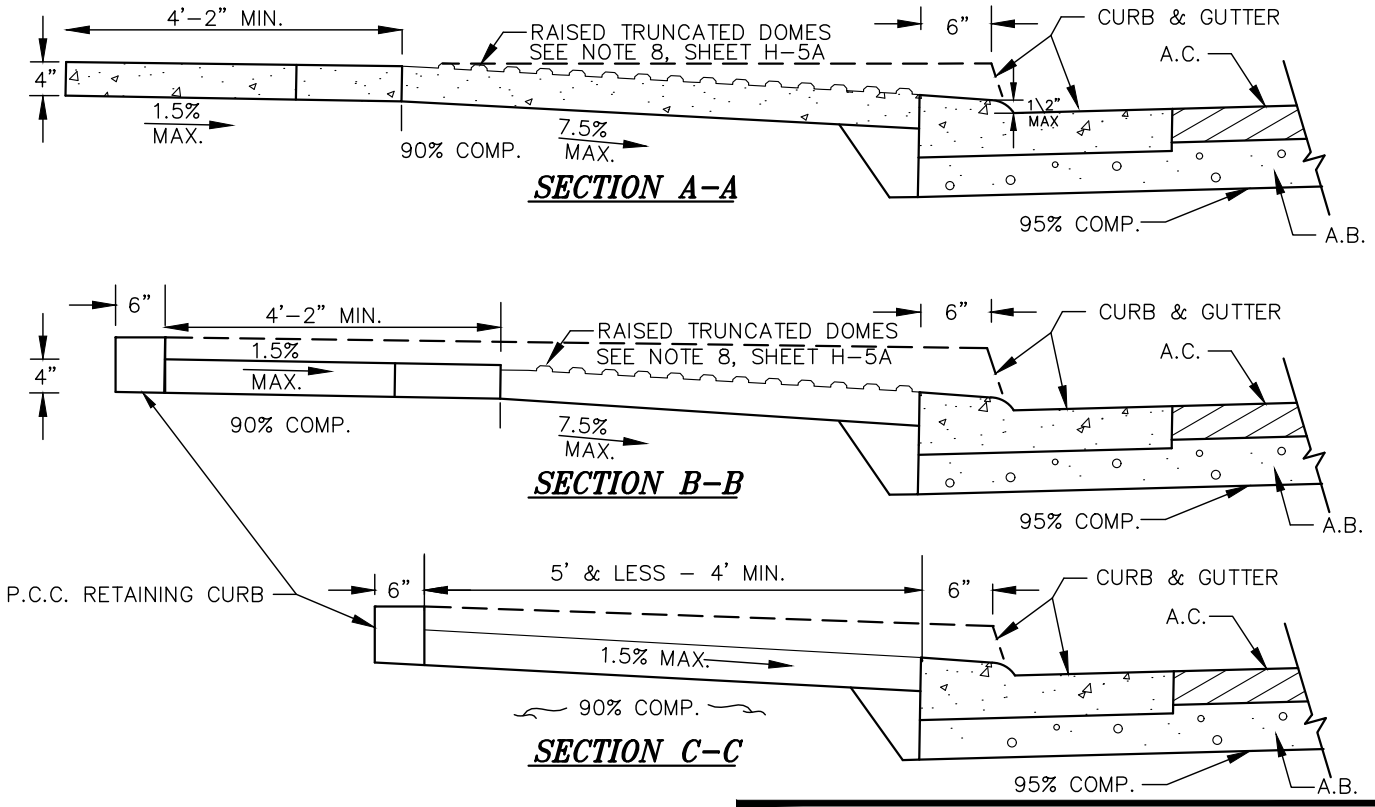

CITY OF LINCOLN
ENGINEERING DEPARTMENT

SIDEWALK RAMPS FOR CURBS

REVISIONS:	DATES:	APPROVED:
		CITY ENGINEER DATE

SCALE: NONE
DATE: SEPTEMBER 2019
DRAWN BY: C.G.

H-5

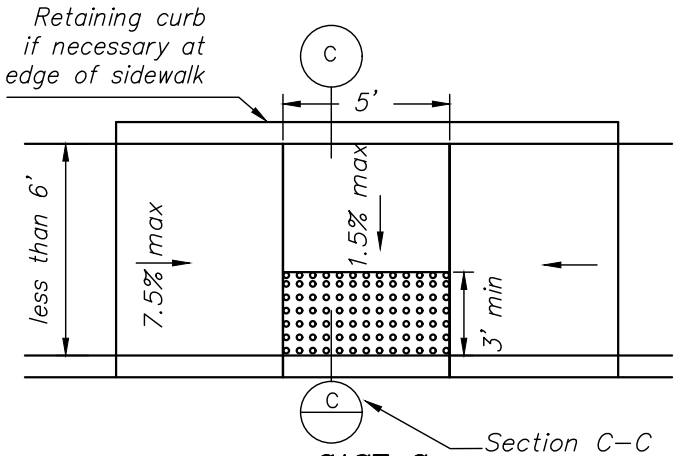

CASE C

For sidewalks less than 6'

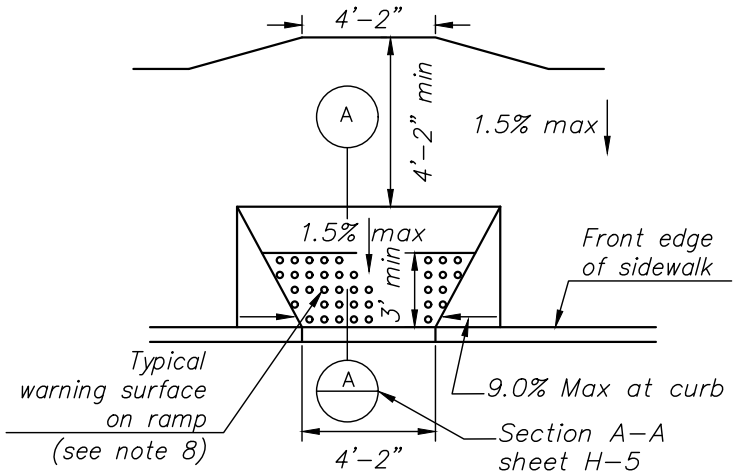

CASE D

For sidewalks greater than 5'

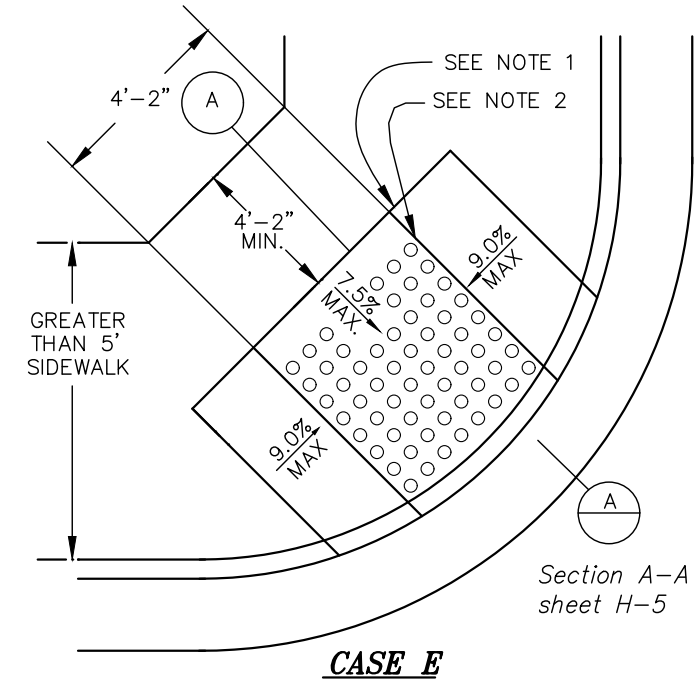

CASE E

For sidewalks greater than 5'

NOTES:

1. If distance from curb to back of sidewalk is too short to accomodate ramp and 4'–2" platform as in Case A the sidewalk may be depressed longitudinally as in Case B or C or may be widened as in Case D.
2. If sidewalk is less than 6' wide, the full width of the sidewalk shall be depressed as shown in Case C.
3. When ramp is located in center of curb return, crosswalk configuration must be similar to that shown for Case E to accomodate wheelchairs.
4. For Cases F and G, the longitudinal portion of the sidewalk may be depressed as shown in case B.
5. If located on a curve the sides of the ramp need not be parallel, but the minimum width of the ramp shall be 4'–2".
6. Transistions from ramps to walks, gutters, or streets shall be flush and free of abrupt changes.
7. Sidewalk and ramps thickness, "T", Shall be 3 1/2" minimum.
8. Curb ramps that have a ramp slope flatter than 6.67% shall have a detectable warning surface that extends the full width of the ramp and 3' minimum length, similar to that shown on Case D. Detectable warning surfaces, at the option of the contractor, shall be constructed by cast–in–place or stamped method, or consist of a prefabricated surface. The prefabricated surface shall conform to the requirements in the special provisions. See Truncated dome detail, sheet H–5B.
9. When detectable warning surface is not required on a curb ramp, the concrete finish of the ramp and its flared sides shall have a transverse broomed surface texture rougher than surrounding sidewalk.
10. Ramp side slope varies uniformly from a maximum of 9.0% at curb to conform with longitudinal sidewalk slope adjacent to top of the ramp, except in Case C.

(Notes continued on sheet H–5B)

CITY OF LINCOLN
ENGINEERING DEPARTMENT

SIDEWALK RAMPS FOR CURBS

REVISIONS:	DATES:	APPROVED:
		CITY ENGINEER DATE

SCALE: NONE
DATE: SEPTEMBER 2019
DRAWN BY: C.G.

H-5A

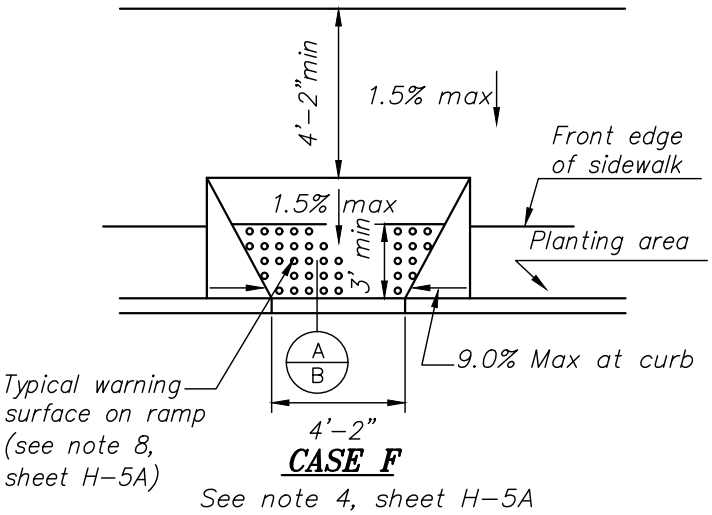

CASE F

See note 4, sheet H-5A

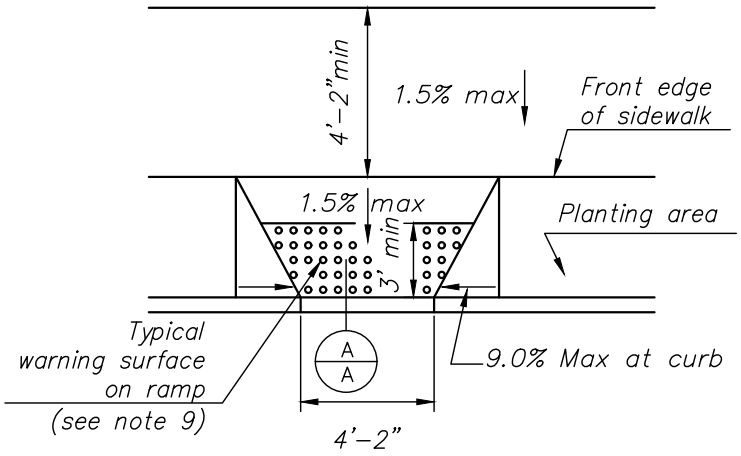

CASE G

For sidewalks greater than 5'

NOTES:

(11) Utility pull boxes, manholes, vaults and all other utility facilities within the boundaries of the curb ramp will be relocated or adjusted to grade by the owner prior to, or in conjunction with, curb ramp construction.

(12) Maximum slopes of adjoining gutters, the road surface immediately adjacent to the curb ramp and continuous passage to the curb ramp shall not exceed 5 percent within 4' of the top or bottom of the curb ramp.

(13) Curb ramps on existing streets, particulary within the older parts of the City, may require alternative custom designs as approved by the City Engineer and ADA Coordinator.

(14) Truncated domes shall be high-visibility yellow.

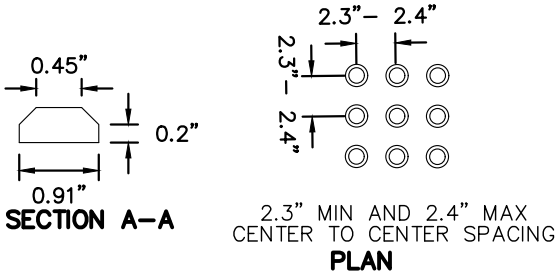

TRUNCATED DOME DETAIL

CITY OF LINCOLN
ENGINEERING DEPARTMENT

SIDEWALK RAMPS FOR CURBS

REVISIONS:	DATES:	APPROVED:
		CITY ENGINEER DATE

SCALE: NONE
DATE: SEPTEMBER 2019
DRAWN BY: C.G.

H-5B

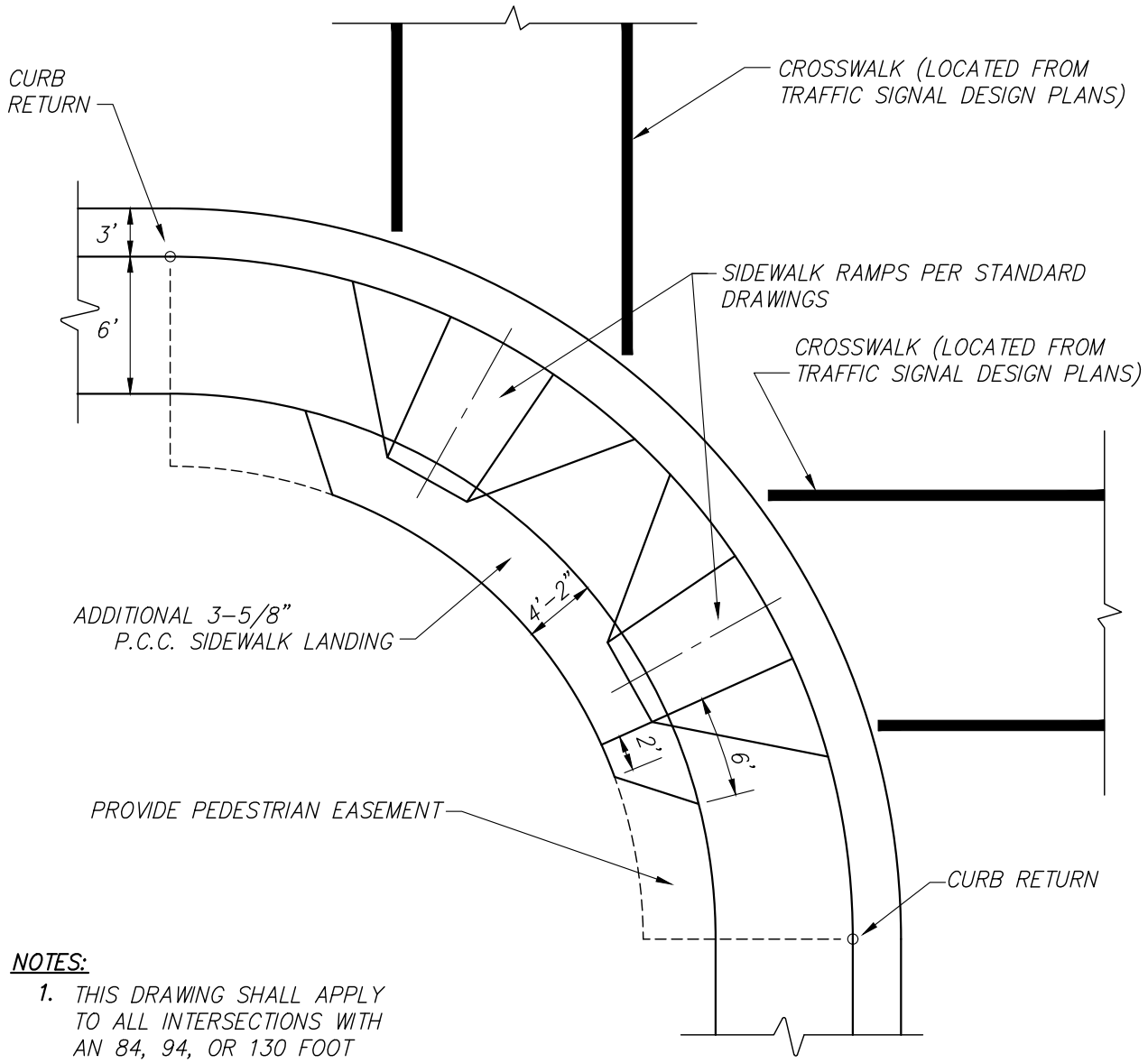

NOTES:

1. THIS DRAWING SHALL APPLY TO ALL INTERSECTIONS WITH AN 84, 94, OR 130 FOOT STREET UNLESS OTHERWISE SPECIFIED BY THE CITY ENGINEER.

2. AT INTERSECTIONS WITH NO MAJOR (84, 94, OR 130 FOOT) STREETS, A SINGLE RAMP MAY BE USED. THE PEDESTRIAN EASEMENT IS REQUIRED BETWEEN CURB RETURNS, AND THE SIDEWALK LANDING TO 6' BEYOND EACH SIDE OF THE RAMP.

3. ALL INTERSECTIONS WITH TYPE 1 (ROLLED) CURBS SHALL HAVE FULLY DEPRESSED SIDEWALK RAMPS IN ACCORDANCE WITH DRAWING H5.

CITY OF LINCOLN
ENGINEERING DEPARTMENT

TYPICAL SIDEWALK RAMP INSTALLATION FOR LARGE RADIUS CURVES

REVISIONS:	DATES:	APPROVED:
		CITY ENGINEER DATE

SCALE: NONE
DATE: SEPTEMBER 2019
DRAWN BY: C.G.

H-6

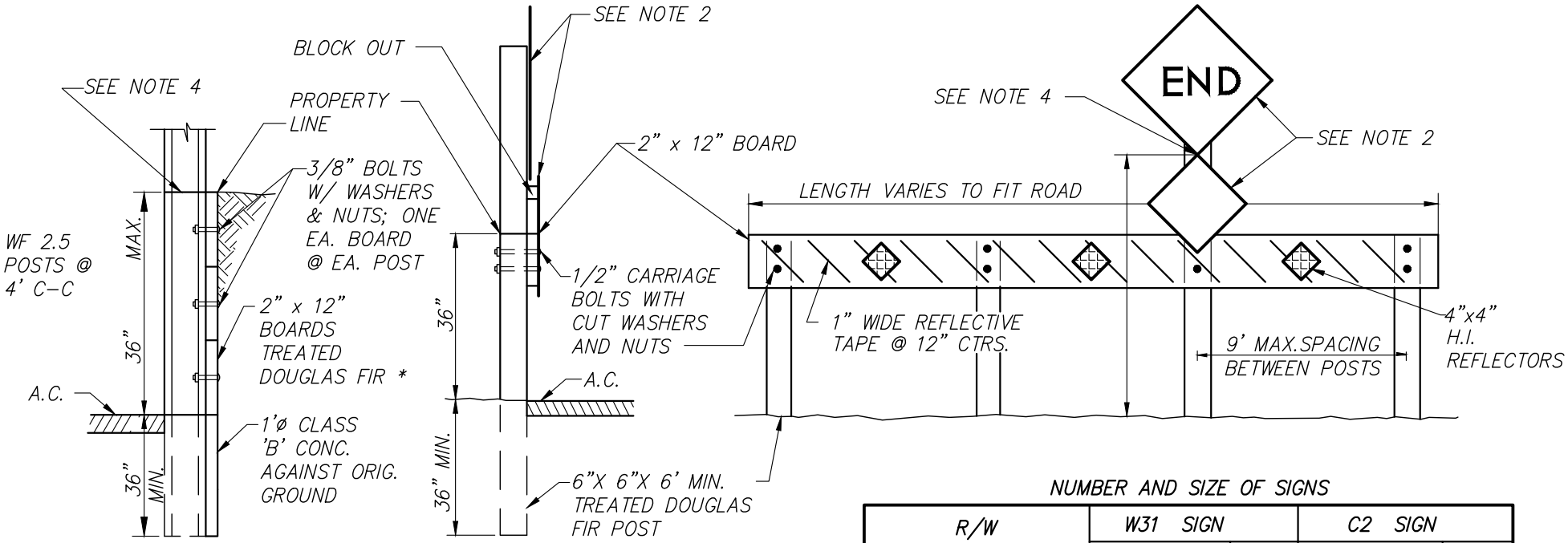

STREET ENDING IN CUT WHERE SLOPE NOT OBTAINABLE

NUMBER AND SIZE OF SIGNS

R/W WIDTH	W31 SIGN		C2 SIGN	
	SIZE	NO.	SIZE	NO.
40' – 42'	24"	1	36" x 24"	1
50' – 60'	24"	2	48" x 30"	1
80' – 84'	24"	2	48" x 30"	1
100' – 110'	24"	2	48" x 30"	1

NOTES:

1. WHERE PERMISSION HAS BEEN GRANTED TO CLOSE AN EXISTING PUBLIC STREET, TO TRAFFIC, A C2 "ROAD CLOSED" SIGN MAY BE REQUIRED ON THE CENTERLINE OF THE ROAD IN ADDITION TO THE W31 "END" SIGNS.
2. 24" x 24" W31 SIGNS AND 18" x 18" RED TYPE N MARKERS. BLOCK OUT AS NECESSARY FOR TYPE N MARKER TOP MOUNTING BOLT (BOTTOM MOUNTING BOLT NORMALLY THROUGH BARRIER RAIL. RED TYPE N MARKERS TO HAVE SOLID RED REFLECTIVE BACKGROUND W/O ADDED REFLECTORS.
3. ALL EXPOSED SURFACES SHALL BE PAINTED WITH 2 (TWO) COATS OF WHITE PAINT CONFORMING TO SECTION 91-3.02 OF THE STATE SPECIFICATIONS.
4. POST AT CENTER OR NEAREST TO CENTER ON RIGHT HAND SIDE TO BE EXTENDED TO PROVIDE MOUNTING FOR SIGNS.
5. POST SHALL BE PRESSURE TREATED PER STATE SPEC. 58-1.02

CITY OF LINCOLN
ENGINEERING DEPARTMENT

STREET CLOSURE TIMBER BARRICADE

REVISIONS:	DATES:	APPROVED:
		CITY ENGINEER DATE

SCALE: NONE
DATE: SEPTEMBER 2019
DRAWN BY: C.G.

H-7

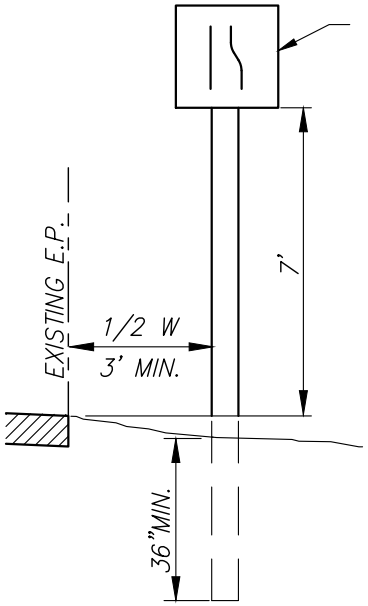

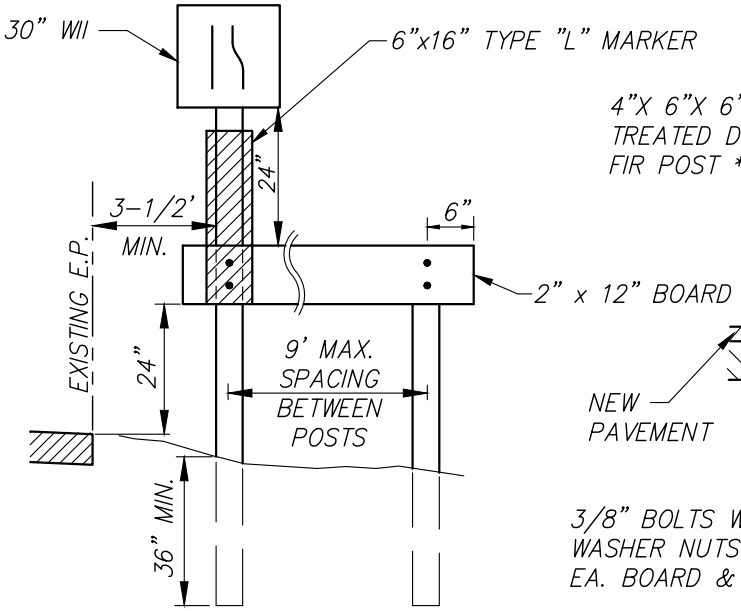

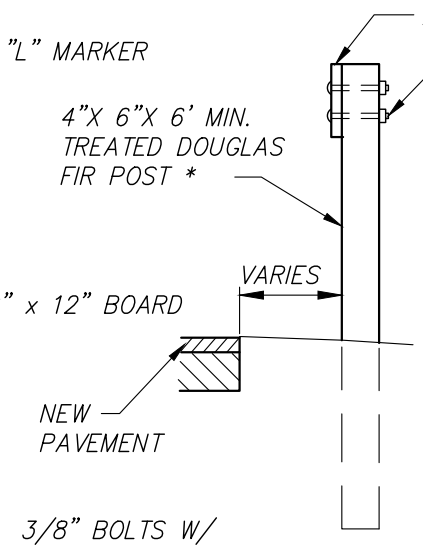

ALL EXPOSED SURFACES SHALL BE PAINTED WHITE IN CONFORMANCE WITH THE REQUIREMENTS OF SECTIONS 91-3.01 AND 91-3.02 OF THE STATE STANDARD SPECIFICATIONS.

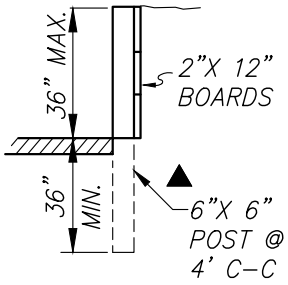

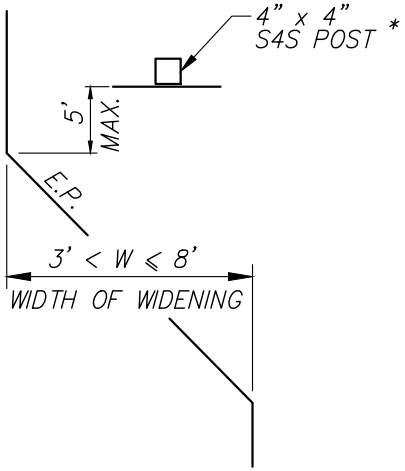

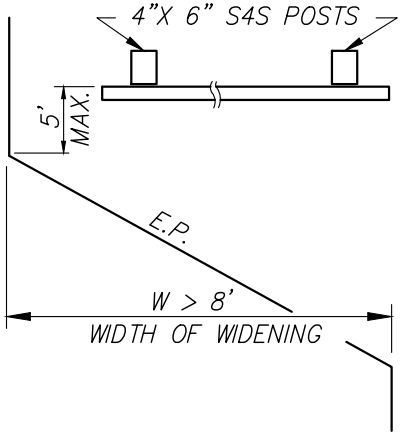

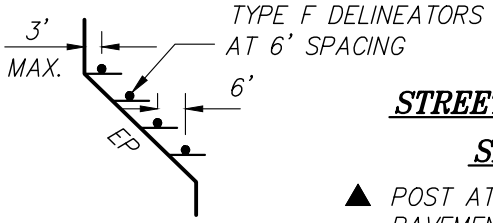

STREET WIDENING AT CUT WHERE SLOPE NOT OBTAINABLE

▲ POST AT SIDE NEAREST THE EDGE OF PAVEMENT TO BE OF SUFFICIENT HEIGHT TO PROVIDE FOR THE MOUNTING OF REQUIRED SIGNS.

CITY OF LINCOLN
ENGINEERING DEPARTMENT

SIGNS AND BARRICADES AT END OF PAVEMENT WIDENING

REVISIONS:	DATES:	APPROVED:
		CITY ENGINEER DATE

SCALE: NONE
DATE: SEPTEMBER 2019
DRAWN BY: C.G.

H-8

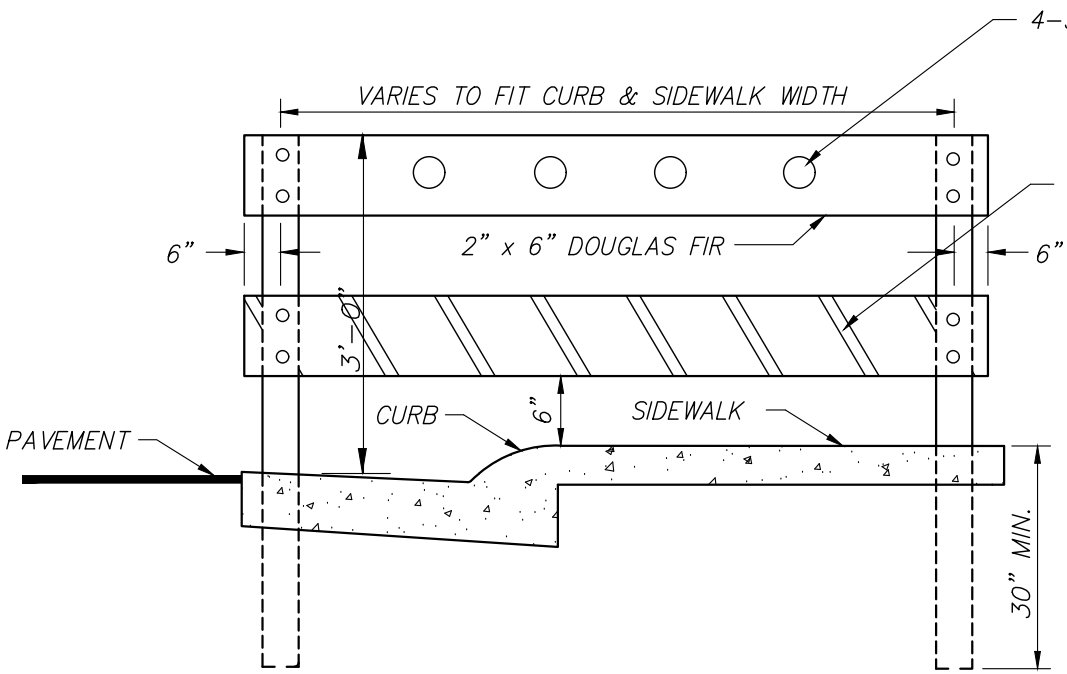

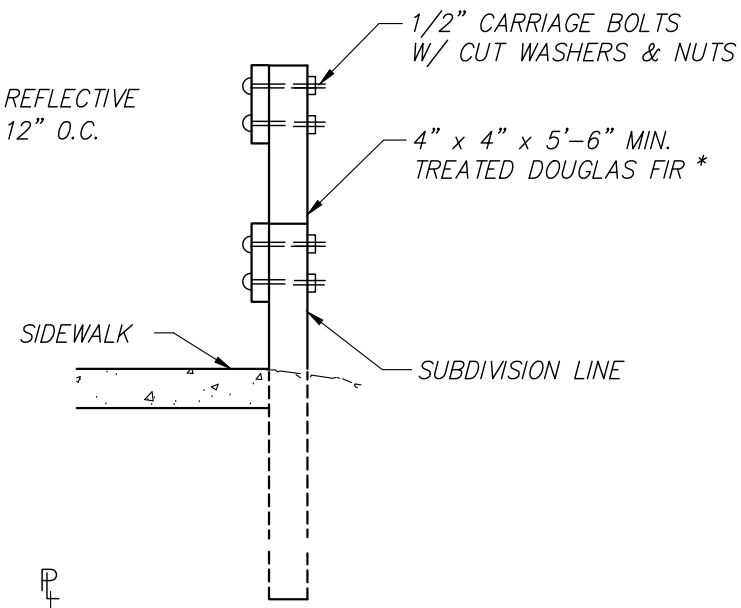

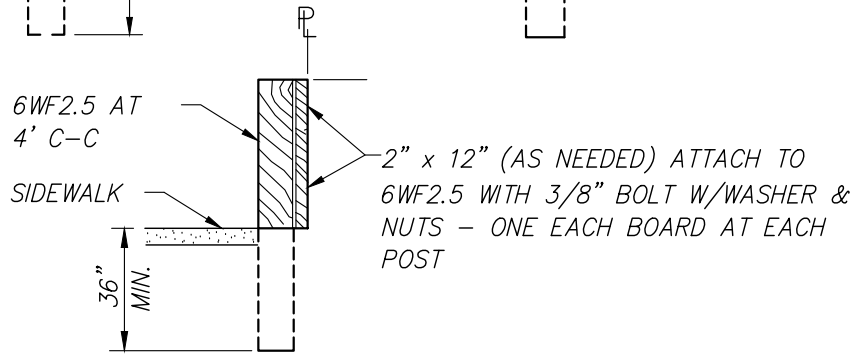

NOTES:

1. SIDEWALK BARRICADES TO BE ERECTED AT EACH LOCATION WHERE SATISFACTORY PROVISION CAN NOT BE MADE FOR PEDESTRIANS TO CONTINUE BEYOND THE TERMINUS OF A SIDEWALK.
2. ALL EXPOSED SURFACES TO BE PAINTED WITH TWO (2) COATS OF WHITE PAINT CONFORMING TO SECTION 91-3.02 OF STATE SPECIFICATIONS.

STREET ENDING IN CUT WHERE SLOPE NOT OBTAINABLE

* STATE OF CALIF. SPECIFICATION 82-3.02C

CITY OF LINCOLN
ENGINEERING DEPARTMENT

SIDEWALK BARRICADE

REVISIONS:	DATES:	APPROVED:
		CITY ENGINEER DATE

SCALE: NONE
DATE: SEPTEMBER 2019
DRAWN BY: C.G.

H-9

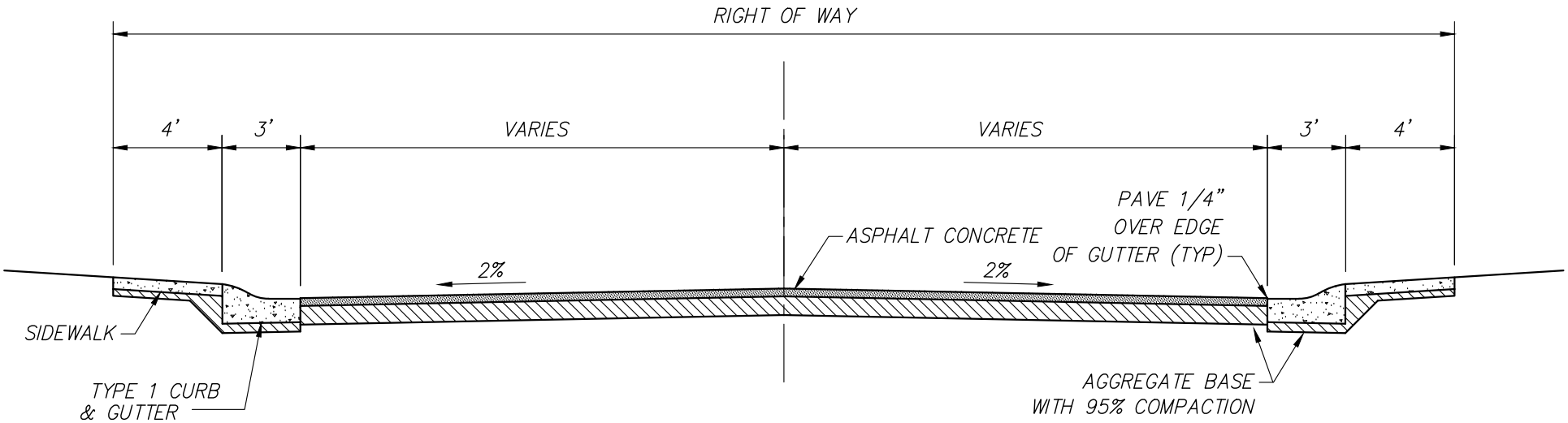

RESIDENTIAL

(MINOR AND PRIMARY RESIDENTIAL)

(SEE IMPROVEMENT PLANS FOR SPECIFIC DIMENSIONS)

NOTE: *TYPE 1 CURB & GUTTER MAY BE USED IN SINGLE FAMILY DEVELOPMENTS ON RESIDENTIAL STREETS ONLY, OR AS SPECIFICALLY APPROVED BY THE CITY ENGINEER.*

CITY OF LINCOLN
ENGINEERING DEPARTMENT

TYPICAL SECTIONS
RESIDENTIAL STREETS

REVISIONS:	DATES:	APPROVED:
		CITY ENGINEER DATE

SCALE: NONE
DATE: SEPTEMBER 2019
DRAWN BY: C.G.

H-10

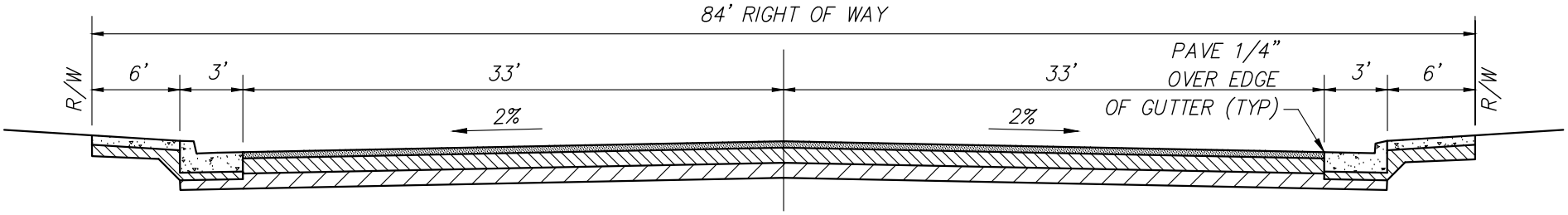

84 FOOT STREET

(MINOR ARTERIAL)

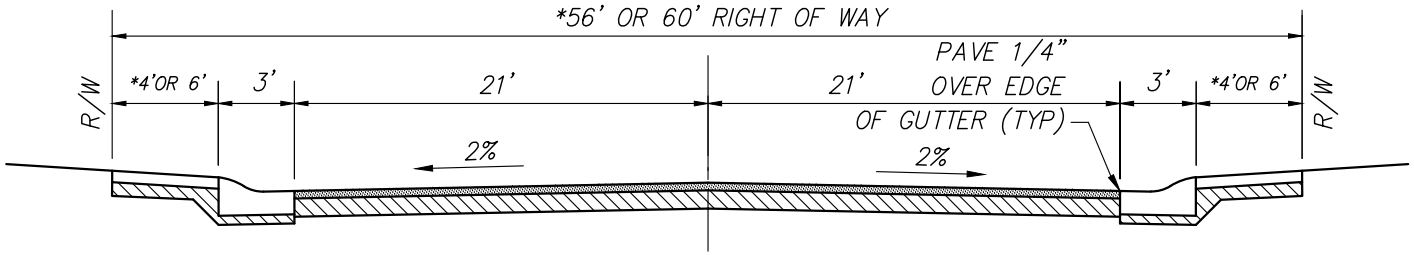

56 OR 60 FOOT STREET

(COLLECTOR/INDUSTRIAL)

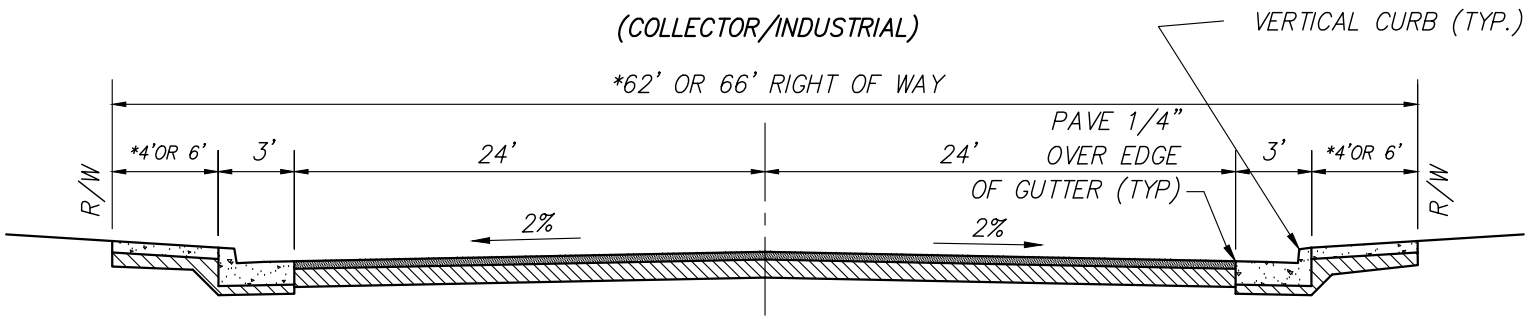

62 OR 66 FOOT STREET

(COLLECTOR APPROACH TO 84 AND 110 FOOT STREETS)

NOTES:

1. *SIDEWALK MAY BE BE 4' WIDE ONLY IN SINGLE FAMILY & DUPLEX RESIDENTIAL AREAS, AND INDUSTRIAL AREAS.
2. VERTICAL CURB (TYPE 2) REQUIRED AS SPECIFIED IN DESIGN CRITERIA & PROCEDURES MANUAL STANDARDS.

CITY OF LINCOLN
ENGINEERING DEPARTMENT

TYPICAL SECTIONS
MINOR ARTERIALS & COLLECTOR STREETS

REVISIONS:	DATES:	APPROVED:
		CITY ENGINEER DATE

SCALE: NONE
DATE: SEPTEMBER 2019
DRAWN BY: C.G.

H-11

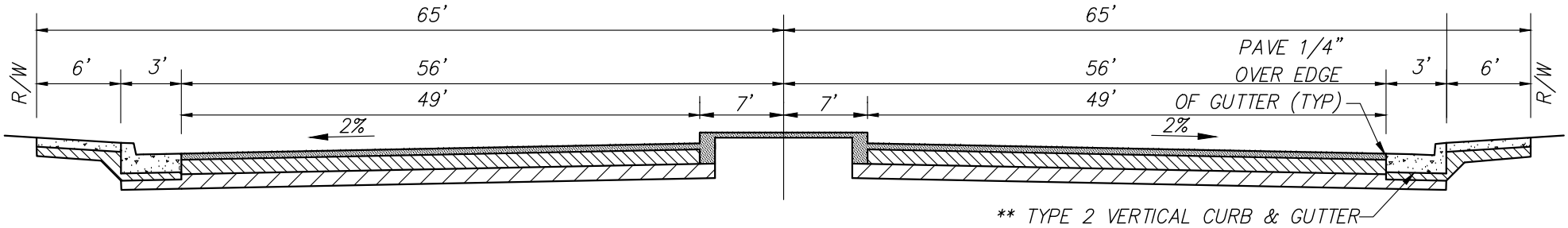

130 FOOT STREET

(SPECIAL THOROUGHFARE)

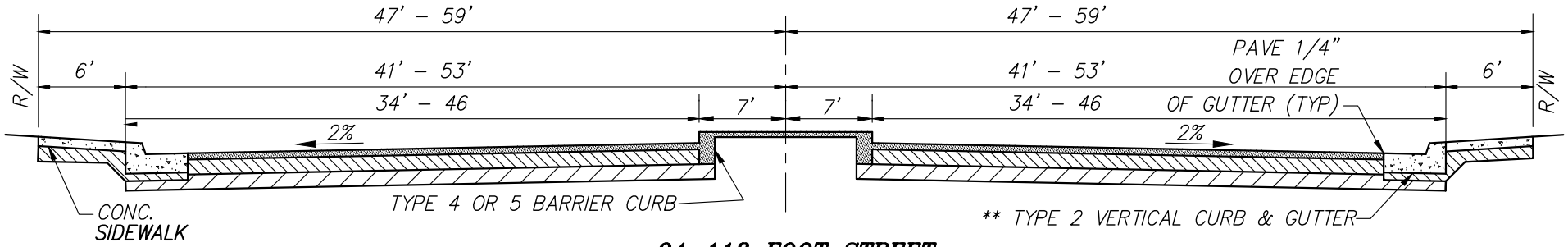

94–118 FOOT STREET

(MAJOR ARTERIAL)

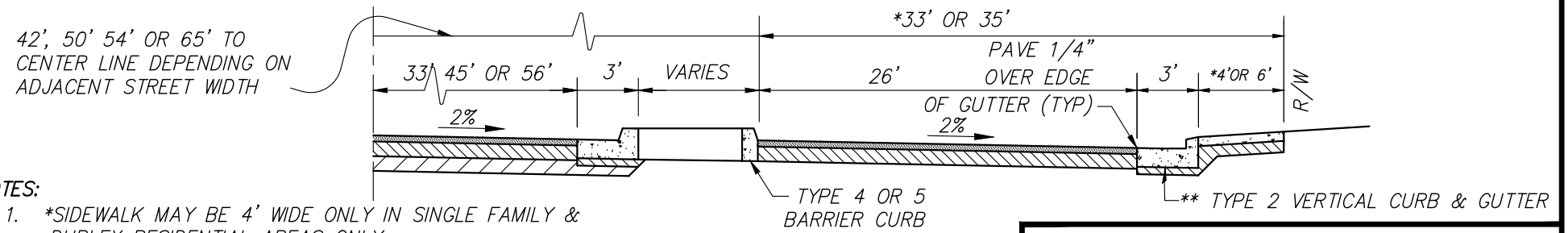

FRONTAGE ROAD

NOTES:

1. *SIDEWALK MAY BE 4' WIDE ONLY IN SINGLE FAMILY & DUPLEX RESIDENTIAL AREAS ONLY.
2. R/W TO BE MOVED BACK OF CURB FOR MEANDERING SIDEWALKS.
3. ** TYPE 2 CURB & GUTTER REQUIRED AS SPECIFIED IN DESIGN CRITERIA & PROCEDURES MANUAL.
4. OVERALL ROADWAY WIDTH MAY VARY DEPENDING ON GENERAL DEVELOPMENT PLAN SPECIFIC PLAN, ETC., AT THE DISCRETION OF THE CITY ENGINEER.

CITY OF LINCOLN
ENGINEERING DEPARTMENT

TYPICAL SECTIONS
MAJOR ARTERIALS
& FRONTAGE ROADS

REVISIONS:	DATES:	APPROVED:
		CITY ENGINEER DATE

SCALE: NONE
DATE: SEPTEMBER 2019
DRAWN BY: C.G.

H-12

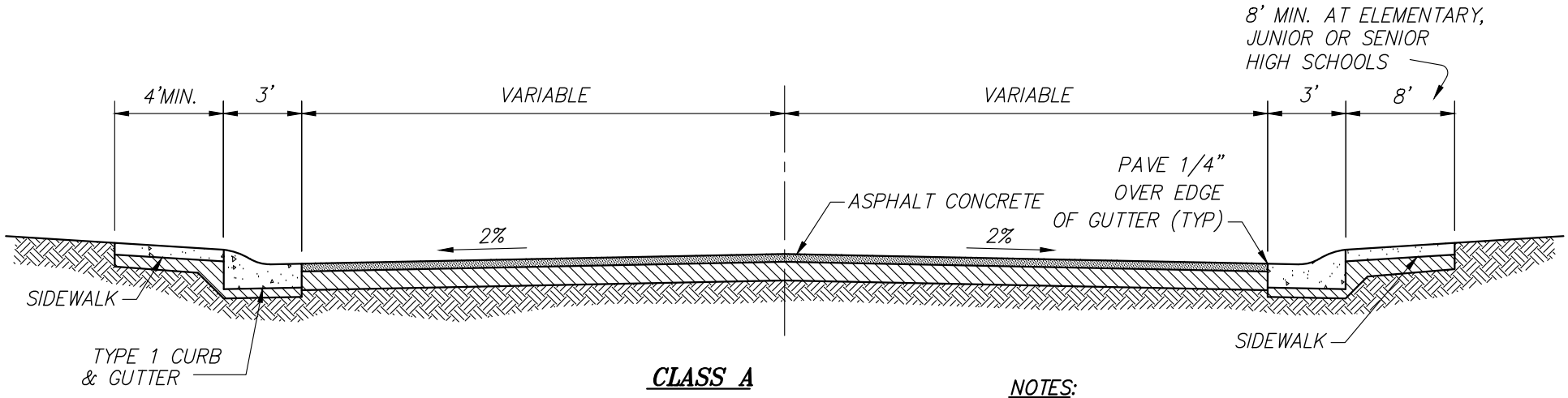

CLASS A

CLASS B

SAME AS CLASS A – EXCEPT SIDEWALKS MAY BE OMITTED

NOTES:

1. DESIGN AND CONSTRUCTION SHALL BE SUBJECT TO THE APPROVAL OF THE CITY ENGINEER.
2. COBBLE TO BE USED IN DITCHES AS SPECIFIED BY CITY ENGINEER.

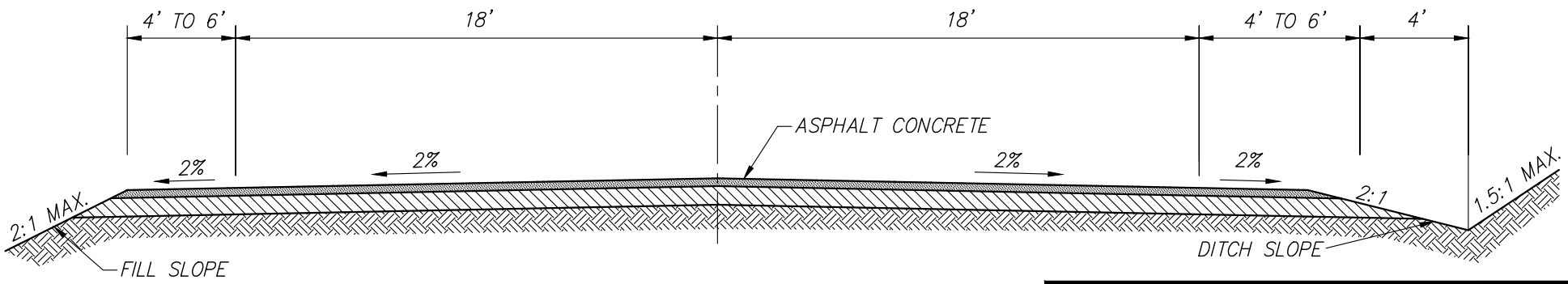

CLASS C

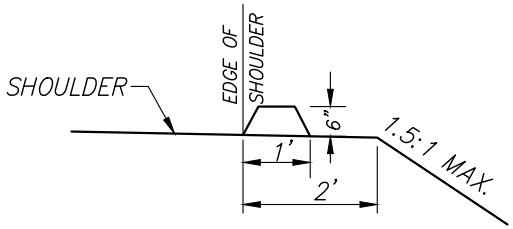

SHOULDER WIDENING WITH A.C. DIKE

CITY OF LINCOLN
ENGINEERING DEPARTMENT

SPECIAL SECTIONS
STREET CLASSES
"A", "B" & "C"

REVISIONS:	DATES:	APPROVED:
		CITY ENGINEER DATE

SCALE: NONE
DATE: SEPTEMBER 2019
DRAWN BY: C.G.

H-12A

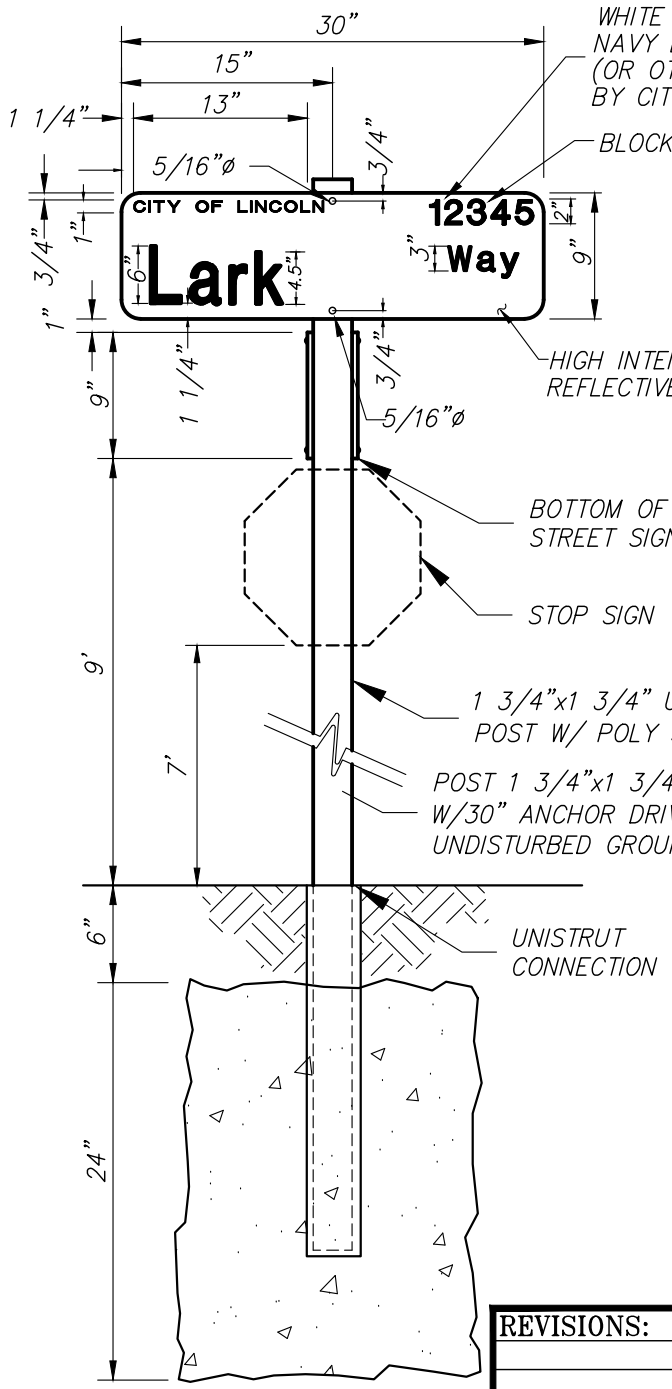

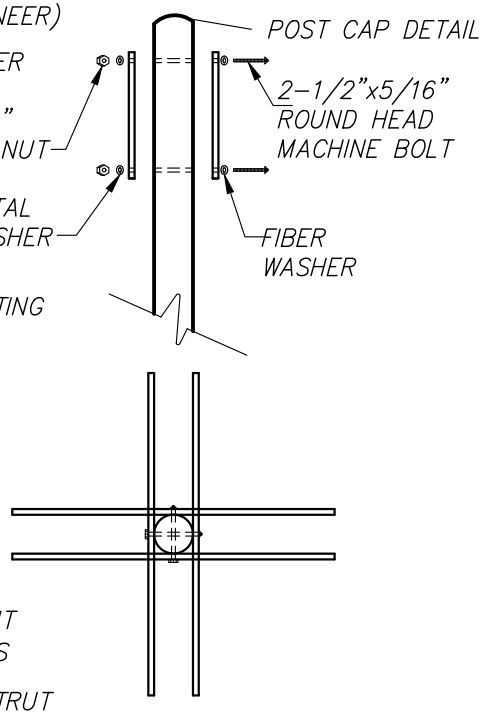

TOP VIEW

STREET NAME DESIGNATIONS:

AVE	AVENUE
BL OR BLVD	BOULEVARD
CIR	CIRCLE
CT	COURT
DR	DRIVE
LN	LANE
PKWY	PARKWAY
PL	PLACE
RD	ROAD
ST	STREET
TR	TRAIL
WY	WAY

NOTES:

1. STREET NAME SIGN PANELS SHALL BE 6061-T6 OR 5155-H36, ALUMINUM ALLOY, 0.125 IN. THICK. PANELS SHALL HAVE 1/2" ROUNDED CORNERS AND BE 9 IN. BY 30 IN. COLOR SHALL BE REFLECTIVE WHITE LETTERS ON A REFLECTIVE NAVY BLUE BACKGROUND. MATERIALS AND METHODS SHALL CONFORM TO CALTRANS "SPECIFICATIONS FOR REFLECTIVE SHEETING ON ALUMINUM HIGHWAY SIGNS". AND FEDERAL SPECIFICATION L-S-300.
2. REFLECTIVE SHEETING FOR THE WHITE LETTERS AND BLUE BACKGROUND SHALL MEET OR EXCEED CALTRANS SPECIFICATIONS FOR "TYPE E REFLECTIVE SIGN SHEETING (ENGINEER GRADE)".
3. ROAD NAME LETTERING SHAL BE COMPOSED OF INITIAL UPPER-CASE LETTER AT LEAST 6 IN. HEIGHT AND LOWER-CASE LETTERS AT LEAST 4.5 IN. HEIGHT IN SERIES "B" STREET NAME DESIGNATIONS, SHALL BE 3 IN. SERIES "B" LETTERING, AND ABBREVIATED AS SHOWN. LEGENDS SHALL BE 1 IN. SERIES "B" LETTERING AND MAY BE WHITE REFLECTIVE SHEETING OR SILK-SCREENED.
4. ALL UNISTRUTS TO HAVE POLY SLEEVES, PER APPROVAL OF CITY ENGINEER
5. 4"x4" REDWOOD POSTS ARE ALLOWABLE ON A CASE BY CASE BASIS PER APPROVAL OF CITY ENGINEER. PER STATE OF CA. SPEC No. 82-3.02C

SIGN DETAILS FOR CROSS INTERSECTION
RESIDENTIAL STREET
1 LANE EACH DIRECTION

CITY OF LINCOLN
ENGINEERING DEPARTMENT

STREET SIGN
FULLY REFLECTIVE

REVISIONS:	DATES:	APPROVED:
		CITY ENGINEER DATE

SCALE: NONE
DATE: SEPTEMBER 2019
DRAWN BY: C.G.

H-13

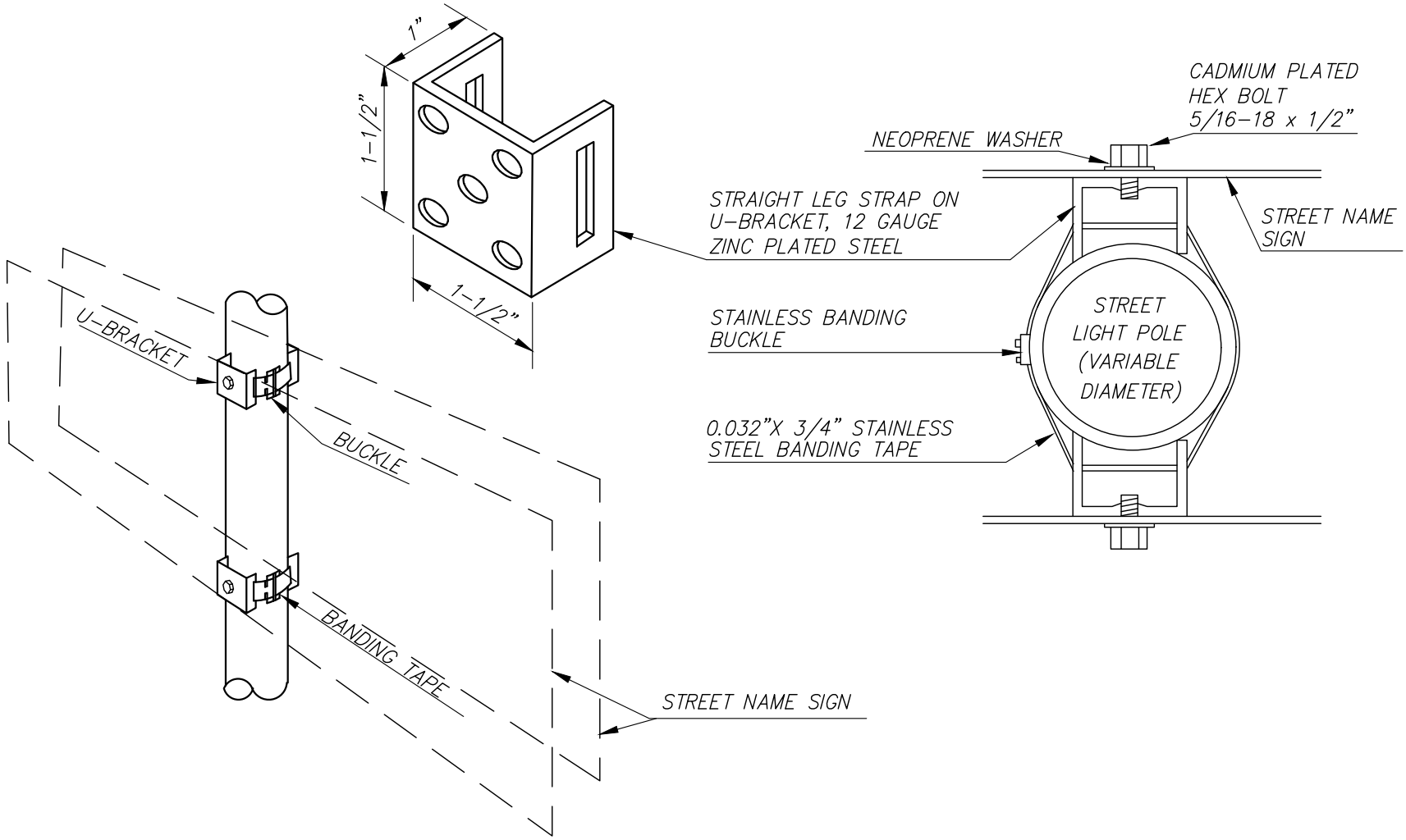

NOTE: DETAIL SHOWN IS FOR TWO SIGN INSTALLATION. FOUR SIGN INSTALLATION MAY BE MADE, WHERE APPLICABLE, BY FASTENING A SECOND PAIR OF SIGNS IN THE SAME MANNER.

STANDARD CLEARANCE TO BOTTOM OF LOWEST SIGN IS 7 FEET.

CITY OF LINCOLN
ENGINEERING DEPARTMENT

STREET NAME SIGN INSTALLATION ON STREET LIGHT POLE

REVISIONS:	DATES:	APPROVED:
		CITY ENGINEER DATE

SCALE: NONE
DATE: SEPTEMBER 2019
DRAWN BY: C.G.

H-14

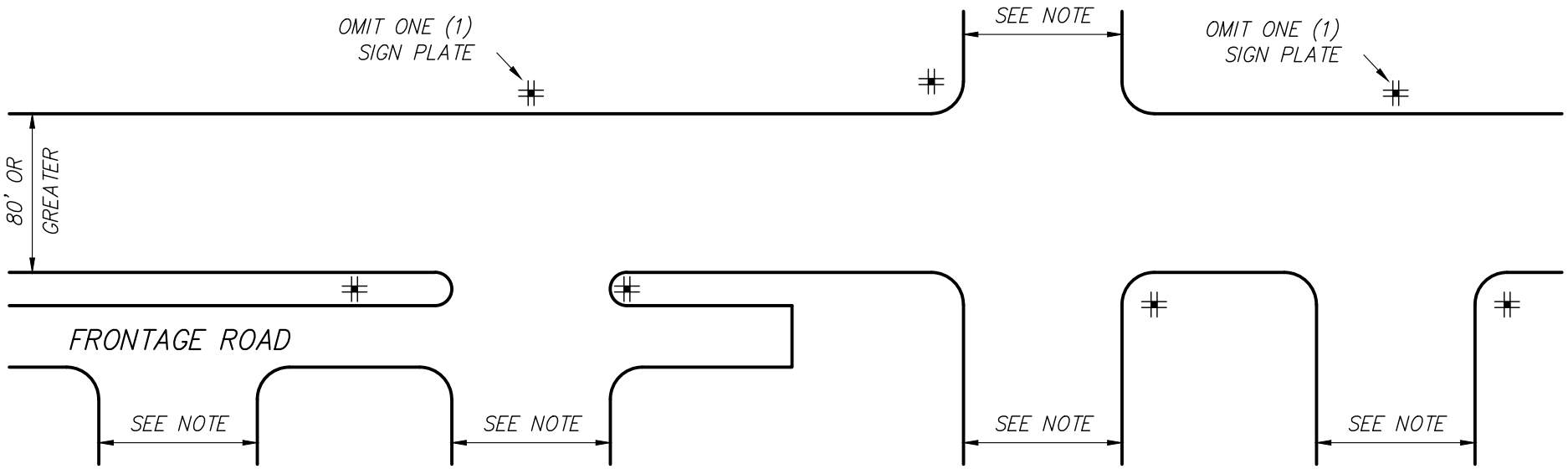

STREETS HAVING 80' OR GREATER R/W WIDTH

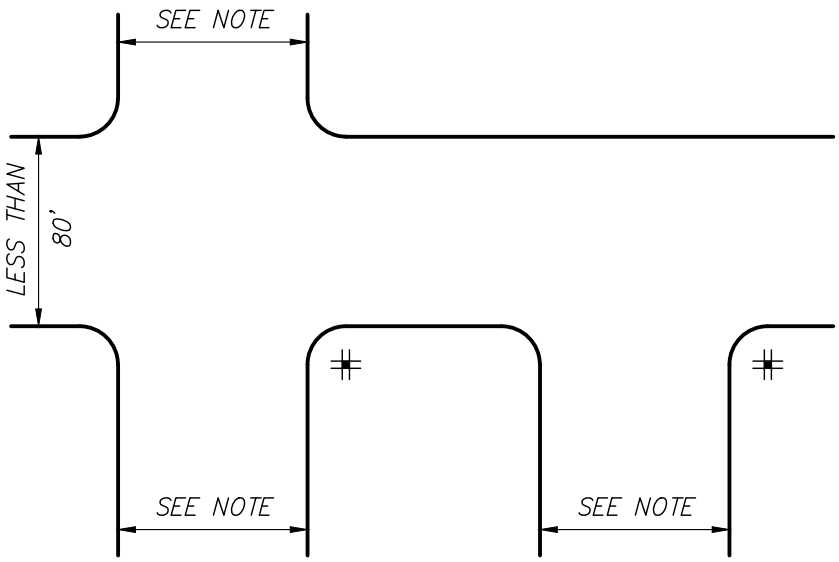

STREETS HAVING LESS THAN 80' R/W WIDTH

LEGEND:

STANDARD STREET NAME SIGN INSTALLATION. FOUR (4) SIGN PLATES ON 1-3/4" x 1-3/4" UNISTRUT POST, 4x4 POST OR ON STREET LIGHT POLE.

NOTE: INTERSECTING STREETS WITH EQUAL OR LESSER R/W WIDTH

CITY OF LINCOLN
ENGINEERING DEPARTMENT

STREET NAME SIGN PLACEMENT DETAILS

REVISIONS:	DATES:	APPROVED:
		CITY ENGINEER DATE

SCALE: NONE
DATE: SEPTEMBER 2019
DRAWN BY: C.G.

H-15

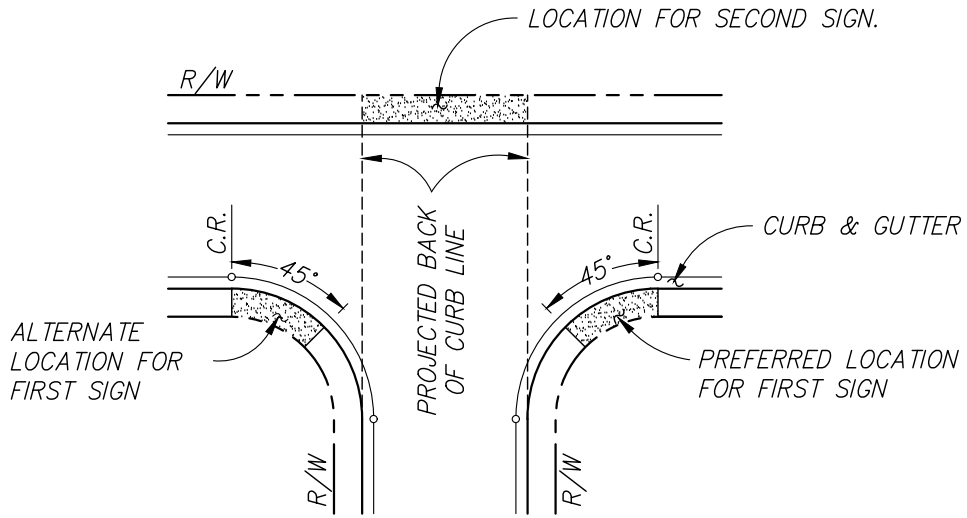

NOTE: *STREET NAME SIGNS MAY BE INSTALLED ON STREET LIGHT POLES WHEN THEY ARE LOCATED WITHIN THE LIMITS DEFINED ON THIS DETAIL.*

CITY OF LINCOLN
ENGINEERING DEPARTMENT

STREET NAME SIGN PLACEMENT ON STREET LIGHT

REVISIONS:	DATES:	APPROVED:
		CITY ENGINEER DATE

SCALE: NONE
DATE: SEPTEMBER 2019
DRAWN BY: C.G.

H-16

BUS TURNOUT ON 94 THRU 130 FOOT STREETS

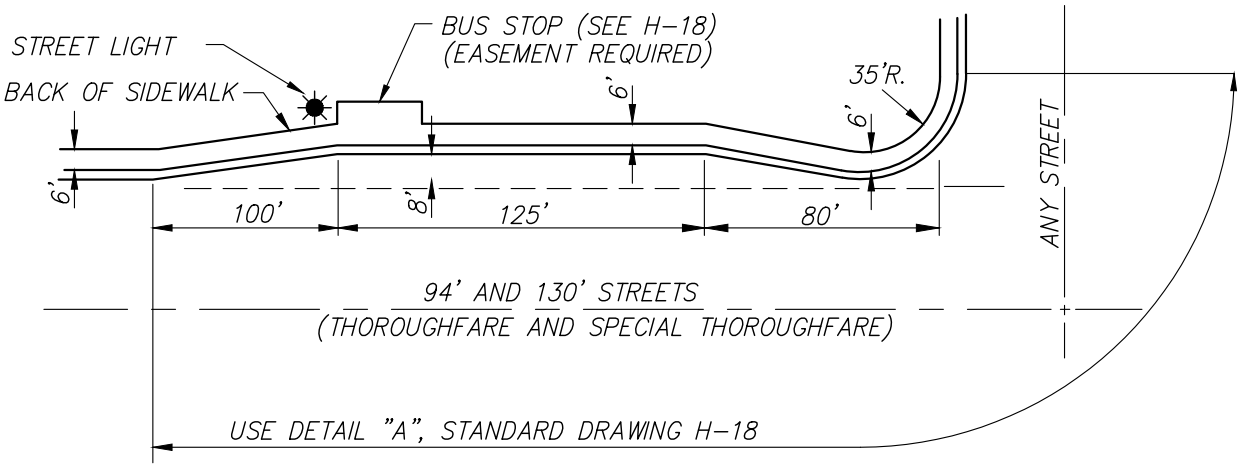

BUS TURNOUT ON 84 FOOT STREETS OR LESS

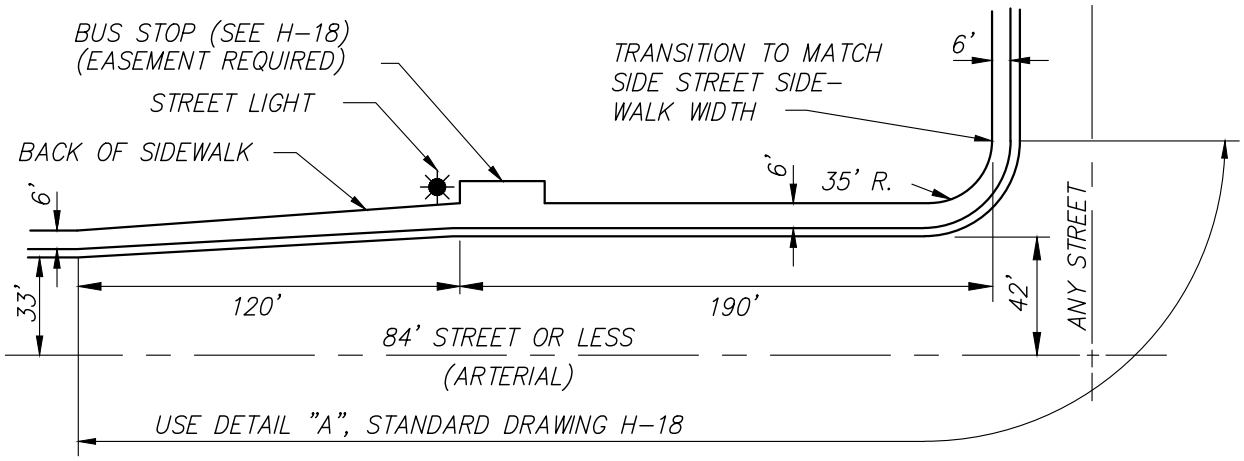

TYPICAL MID-BLOCK BUS TURNOUT

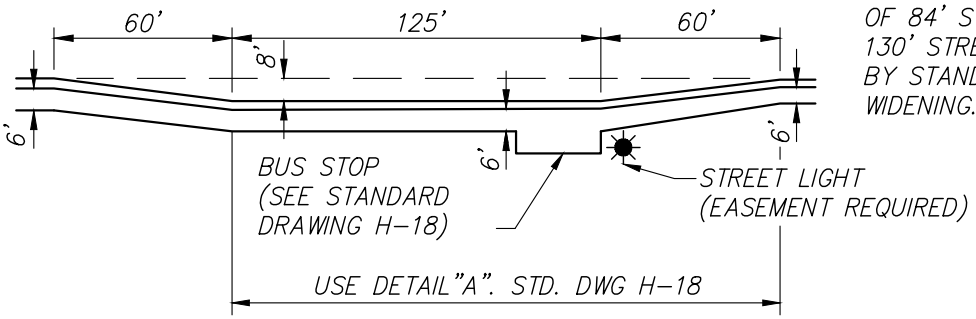

NOTES:

1. BUS STOPS AT INTERSECTIONS OF 84' STREETS, 110' STREETS & 130' STREETS ARE PROVIDED FOR BY STANDARD INTERSECTION WIDENING. SEE DWG H-23

NOTES (CONT.)

2. THE DIMENSIONS SHOWN ARE MINIMUM STANDARDS. THE DIRECTOR MAY DETERMINE LONGER WIDENING TO BE NECESSARY AT CERTAIN SPECIAL CASES OR IMPORTANT INTERSECTIONS WHERE DOCUMENTATION WAS MADE PRIOR TO SUBMITTAL OF PLANS.

CITY OF LINCOLN
ENGINEERING DEPARTMENT

BUS TURNOUT DETAILS

REVISIONS:	DATES:	APPROVED:
		CITY ENGINEER DATE

SCALE: NONE
DATE: SEPTEMBER 2019
DRAWN BY: C.G.

H-17

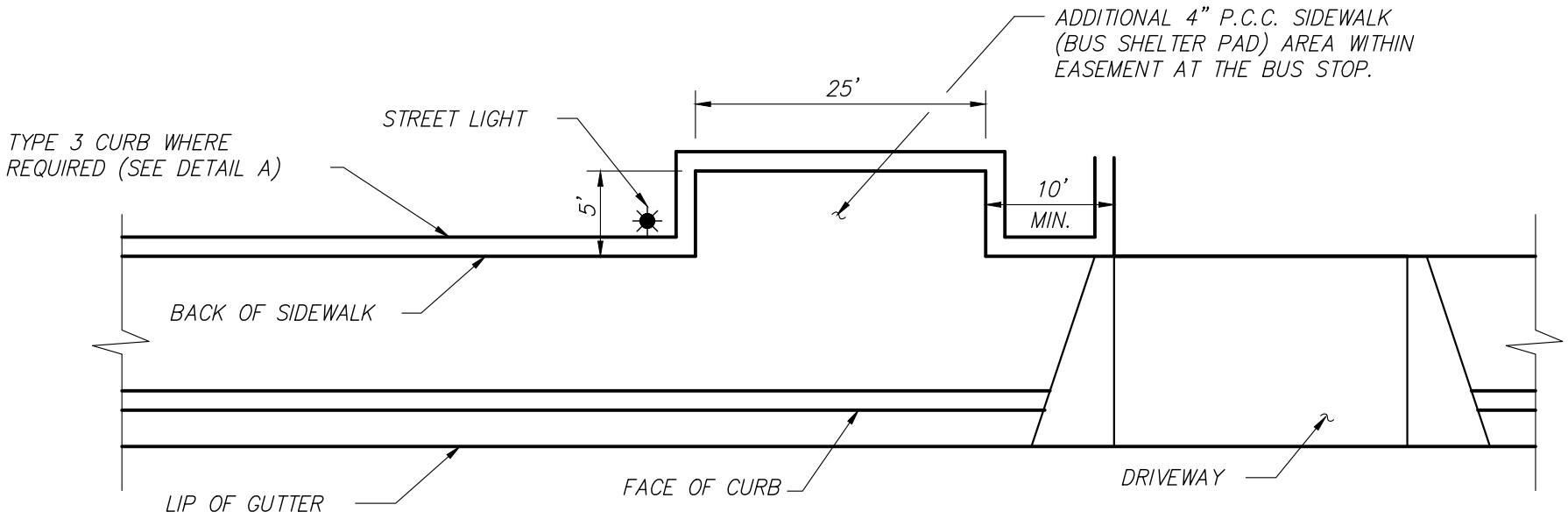

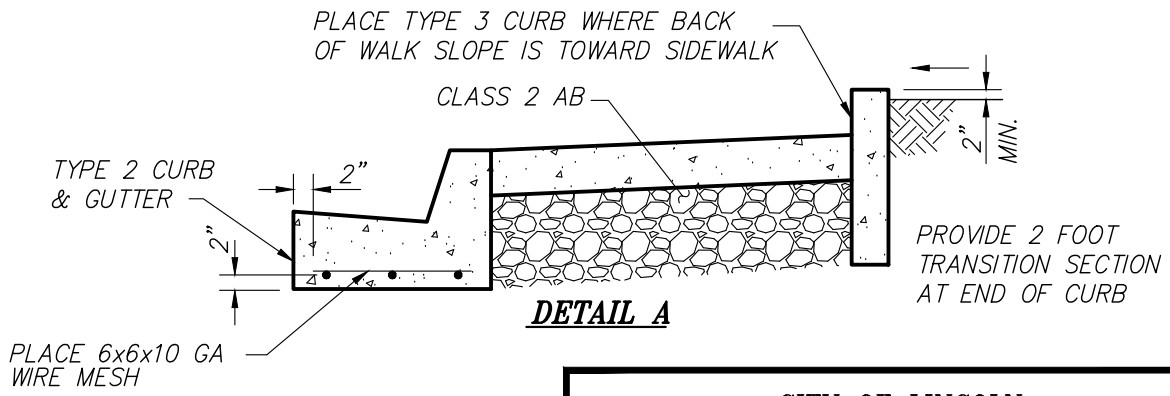

DETAIL A

NOTES:

1. DETAIL 'A' SECTION SHALL BE USED FOR 100 FEET EACH SIDE OF BUS STOPS WITHOUT TURNOUTS. THE WIRE MESH REINFORCING STEEL SHALL BE CONTINUED ACROSS ANY DRIVEWAYS WITHIN THE 100 FOOT DISTANCE FROM THE BUS STOP.
2. SEE STANDARD DRAWING H-18 FOR APPLICATIONS OF DETAIL 'A' AT BUS STOP TURNOUTS.
3. PLACE UNDER-SIDEWALK DRAINS AT ALL BEHIND-SIDEWALK DRAINAGE CATCH POINTS.

CITY OF LINCOLN
ENGINEERING DEPARTMENT

BUS STOP

REVISIONS:	DATES:	APPROVED:
		CITY ENGINEER DATE

SCALE: NONE
DATE: SEPTEMBER 2019
DRAWN BY: C.G.

H-18

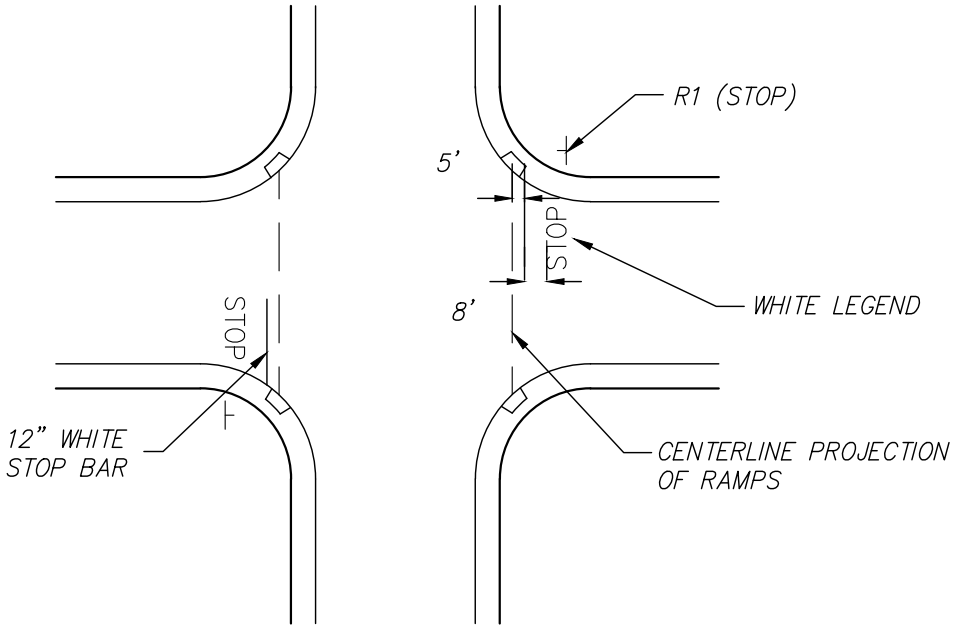

STOP BAR STRIPING:
NO SCALE

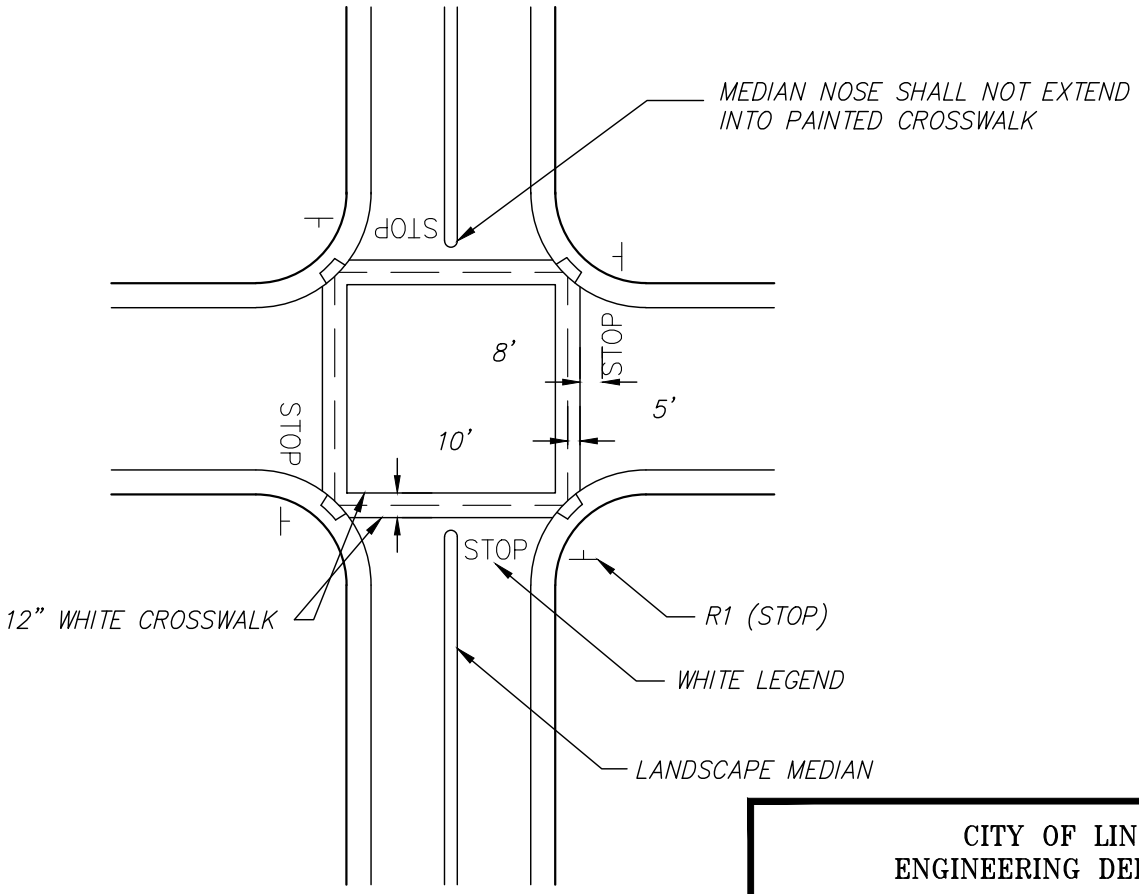

CROSSWALK STRIPING:
NO SCALE

CITY OF LINCOLN
ENGINEERING DEPARTMENT

CROSS WALK / STOP BAR STRIPING

REVISIONS:	DATES:	APPROVED:
		CITY ENGINEER DATE

SCALE: NONE
DATE: SEPTEMBER 2019
DRAWN BY: C.G.

H-19

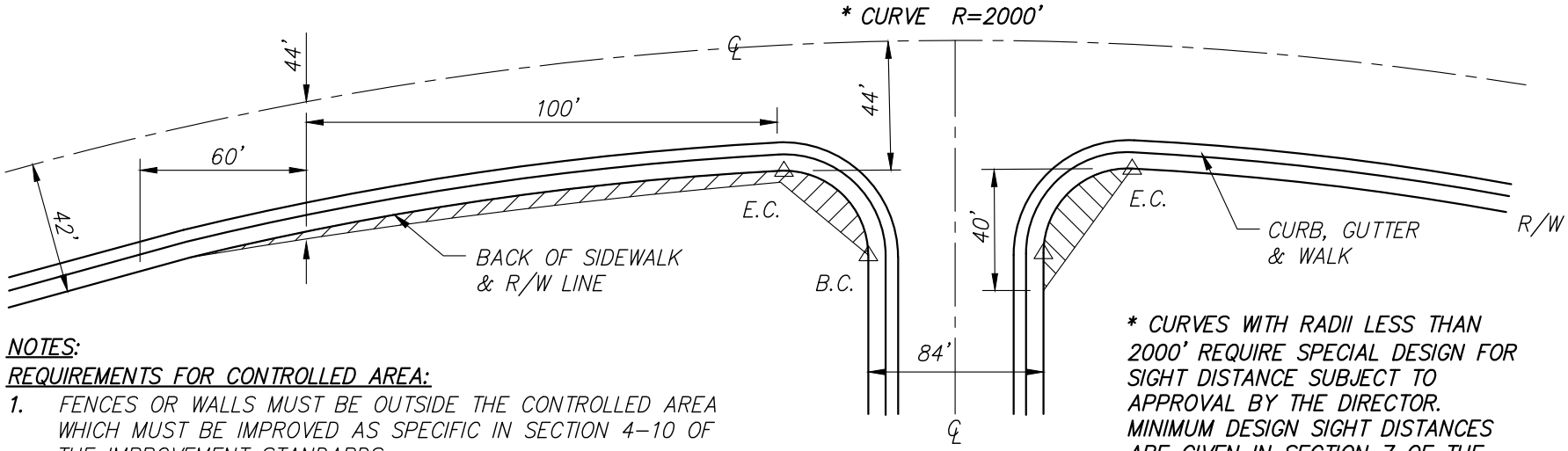

* CURVES WITH RADII LESS THAN 2000' REQUIRE SPECIAL DESIGN FOR SIGHT DISTANCE SUBJECT TO APPROVAL BY THE DIRECTOR. MINIMUM DESIGN SIGHT DISTANCES ARE GIVEN IN SECTION 7 OF THE CITY OF LINCOLN DESIGN CRITERIA AND PROCEDURES MANUAL.

NOTES:

REQUIREMENTS FOR CONTROLLED AREA:

1. FENCES OR WALLS MUST BE OUTSIDE THE CONTROLLED AREA WHICH MUST BE IMPROVED AS SPECIFIC IN SECTION 4-10 OF THE IMPROVEMENT STANDARDS.
2. LOW GROWING GROUND COVER ONLY MAY BE PLANTED IN CONTROLLED AREA IF THERE IS NO FENCE OR WALL.
3. CONTROLLED AREA DIMENSIONS TO BE PER APPROVED BY CITY ENGINEER

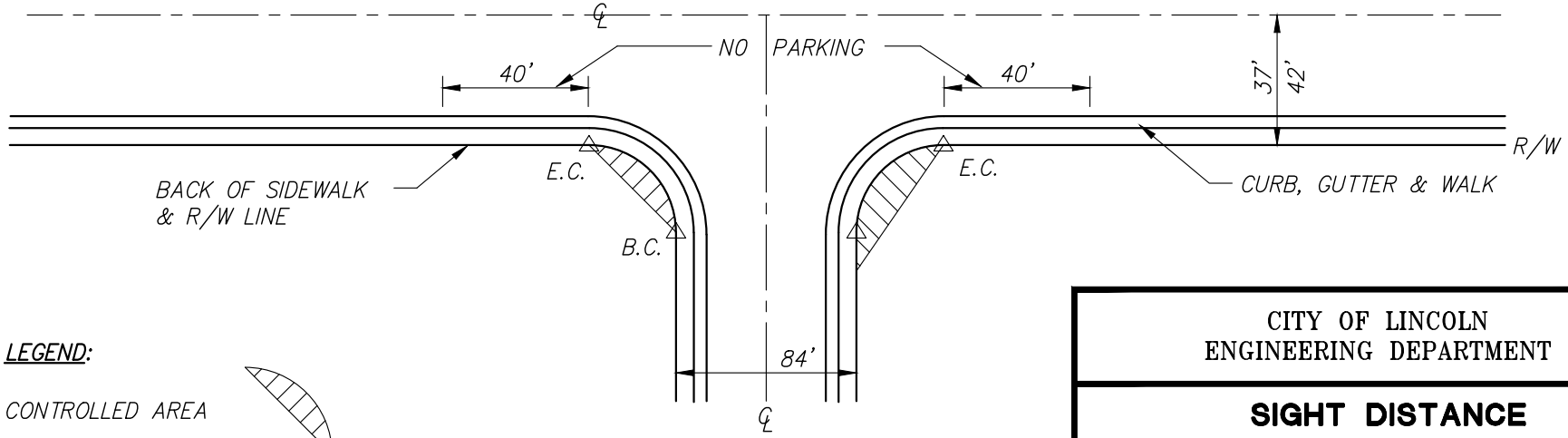

LEGEND:

CONTROLLED AREA

CITY OF LINCOLN
ENGINEERING DEPARTMENT

SIGHT DISTANCE REQUIREMENTS FOR 84' STREETS

REVISIONS:	DATES:	APPROVED:
		CITY ENGINEER DATE

SCALE: NONE
DATE: SEPTEMBER 2019
DRAWN BY: C.G.

H-20

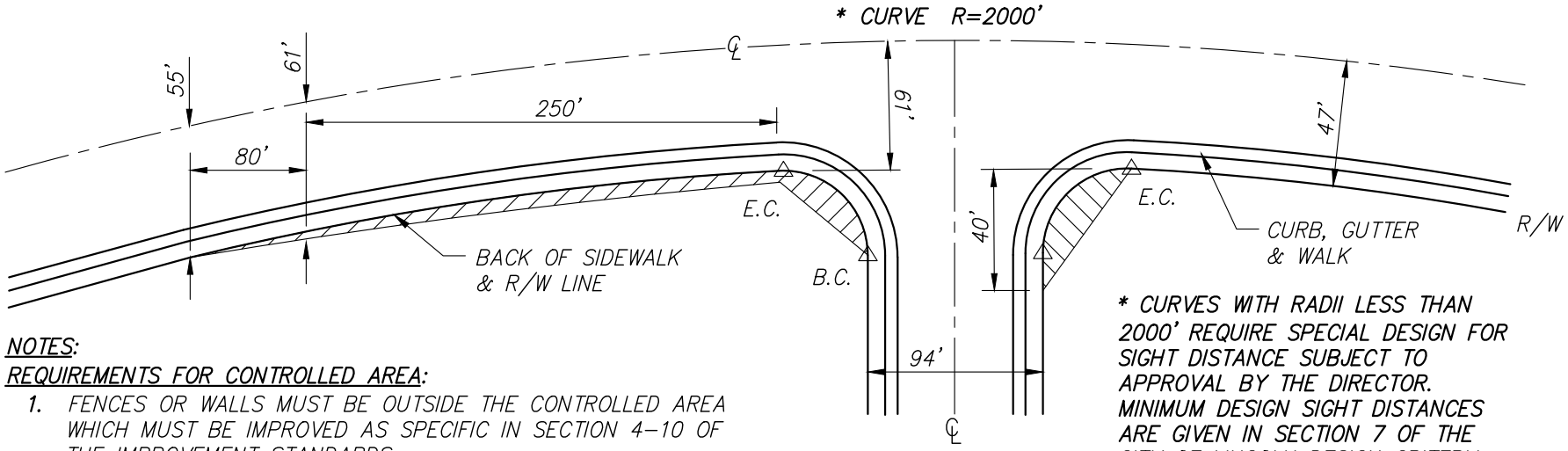

* CURVES WITH RADII LESS THAN 2000' REQUIRE SPECIAL DESIGN FOR SIGHT DISTANCE SUBJECT TO APPROVAL BY THE DIRECTOR. MINIMUM DESIGN SIGHT DISTANCES ARE GIVEN IN SECTION 7 OF THE CITY OF LINCOLN DESIGN CRITERIA AND PROCEDURES MANUAL.

NOTES:

REQUIREMENTS FOR CONTROLLED AREA:

1. FENCES OR WALLS MUST BE OUTSIDE THE CONTROLLED AREA WHICH MUST BE IMPROVED AS SPECIFIC IN SECTION 4-10 OF THE IMPROVEMENT STANDARDS.
2. LOW GROWING GROUND COVER ONLY MAY BE PLANTED IN CONTROLLED AREA IF THERE IS NO FENCE OR WALL.
3. CONTROLLED AREA DIMENSIONS TO BE PER APPROVED BY CITY ENGINEER

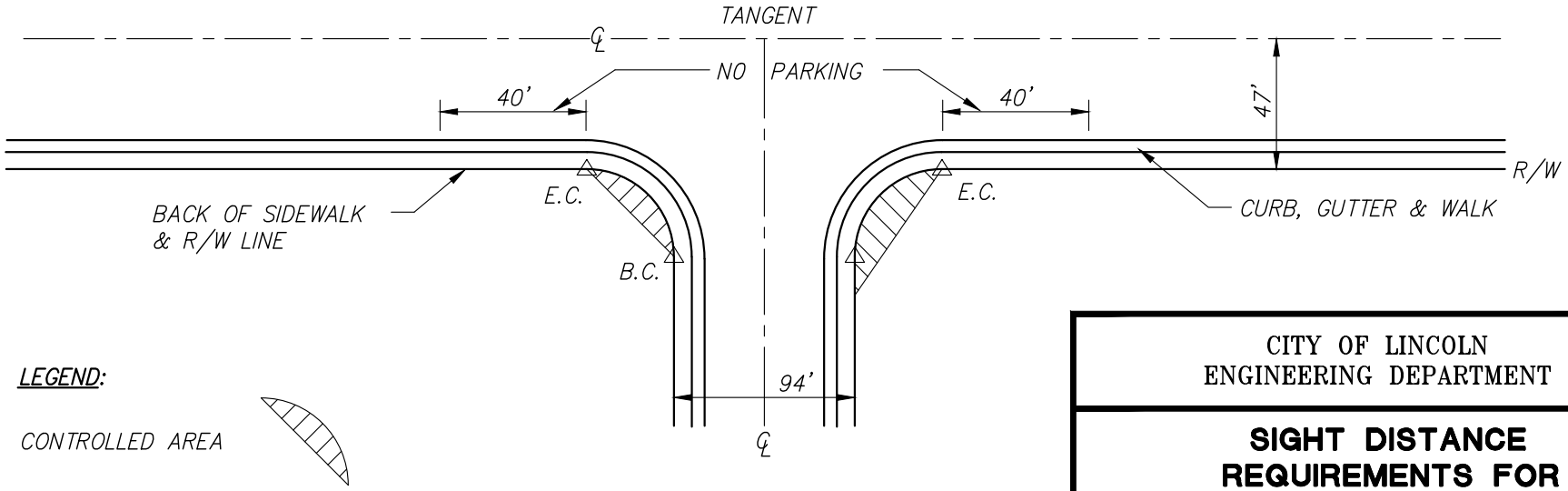

LEGEND:

CONTROLLED AREA

CITY OF LINCOLN
ENGINEERING DEPARTMENT

SIGHT DISTANCE REQUIREMENTS FOR 94' STREETS

REVISIONS:	DATES:	APPROVED:
		CITY ENGINEER DATE

SCALE: NONE
DATE: SEPTEMBER 2019
DRAWN BY: C.G.

H-21

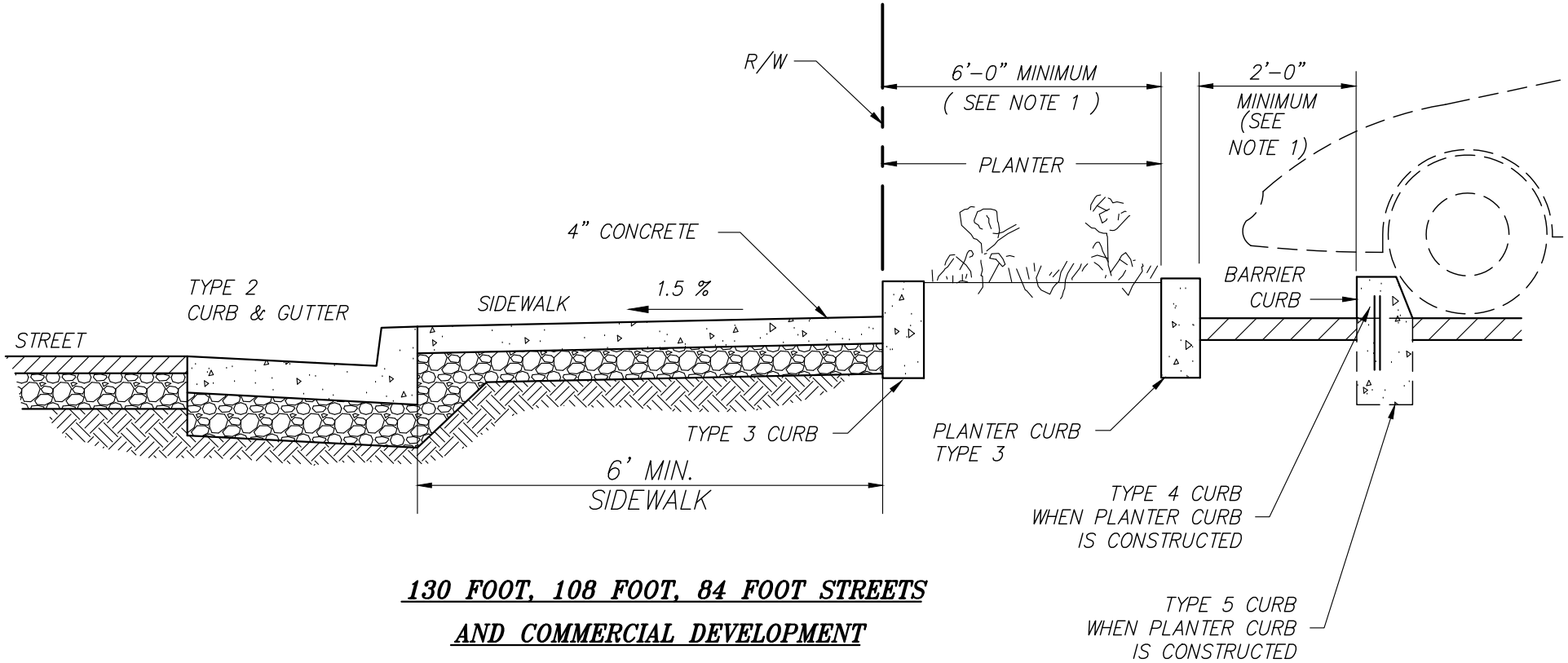

130 FOOT, 108 FOOT, 84 FOOT STREETS

AND COMMERCIAL DEVELOPMENT

NOTES:

1. PLANTER CURBS ARE OPTIONAL. IF REQUIRED PLANTER WIDTH IS INCREASED A MINIMUM OF 2'-6" OR MORE.
2. PLANTER CURBS MAY BE OMITTED ONLY IF LAWN IS PLANTED TO BACK OF SIDEWALK AND CONTINUOUS BARRIER CURB IS PLACED AT LOCATION SHOWN.

CITY OF LINCOLN
ENGINEERING DEPARTMENT

PLANTER AND BARRIER CURB DETAIL (A)

REVISIONS:	DATES:	APPROVED:
		CITY ENGINEER DATE

SCALE: NONE
DATE: SEPTEMBER 2019
DRAWN BY: C.G.

H-21A

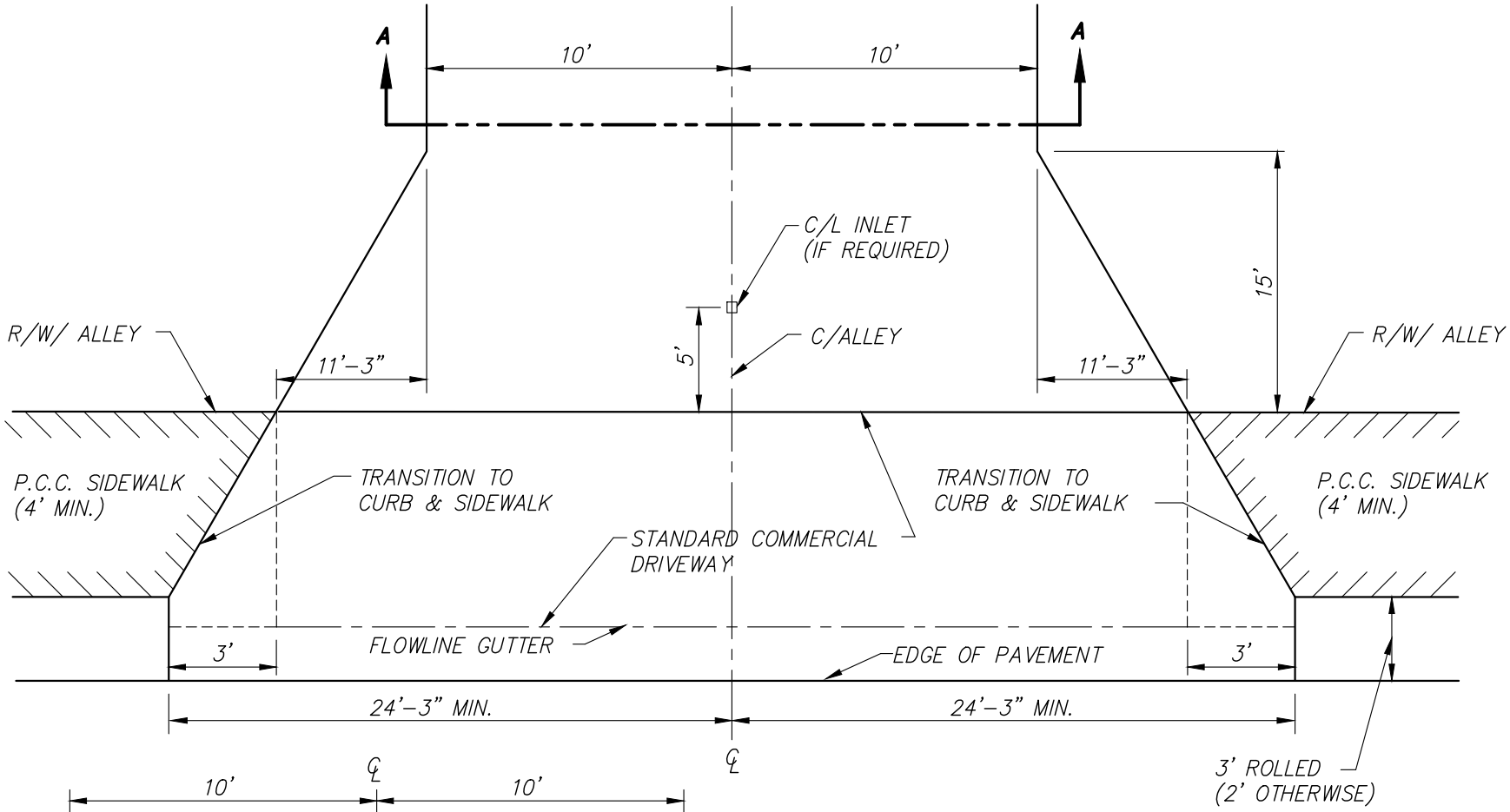

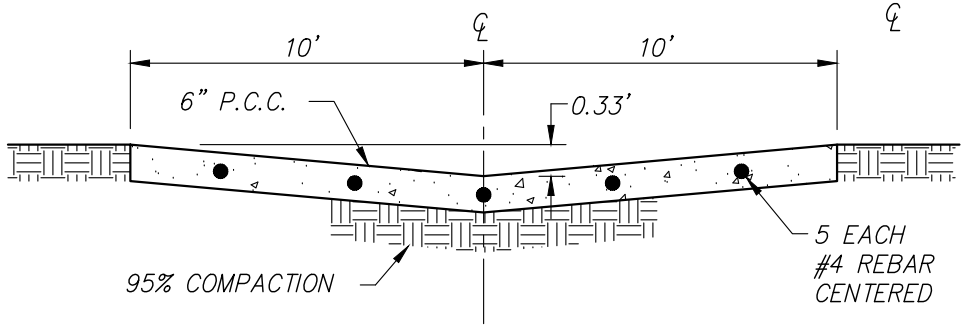

SECTION A-A

CITY OF LINCOLN
ENGINEERING DEPARTMENT

ALLEY DETAILS
AND
DRIVEWAY TRANSITIONS

REVISIONS:	DATES:	APPROVED:
		CITY ENGINEER DATE

SCALE: NONE
DATE: SEPTEMBER 2019
DRAWN BY: C.G.

H-22

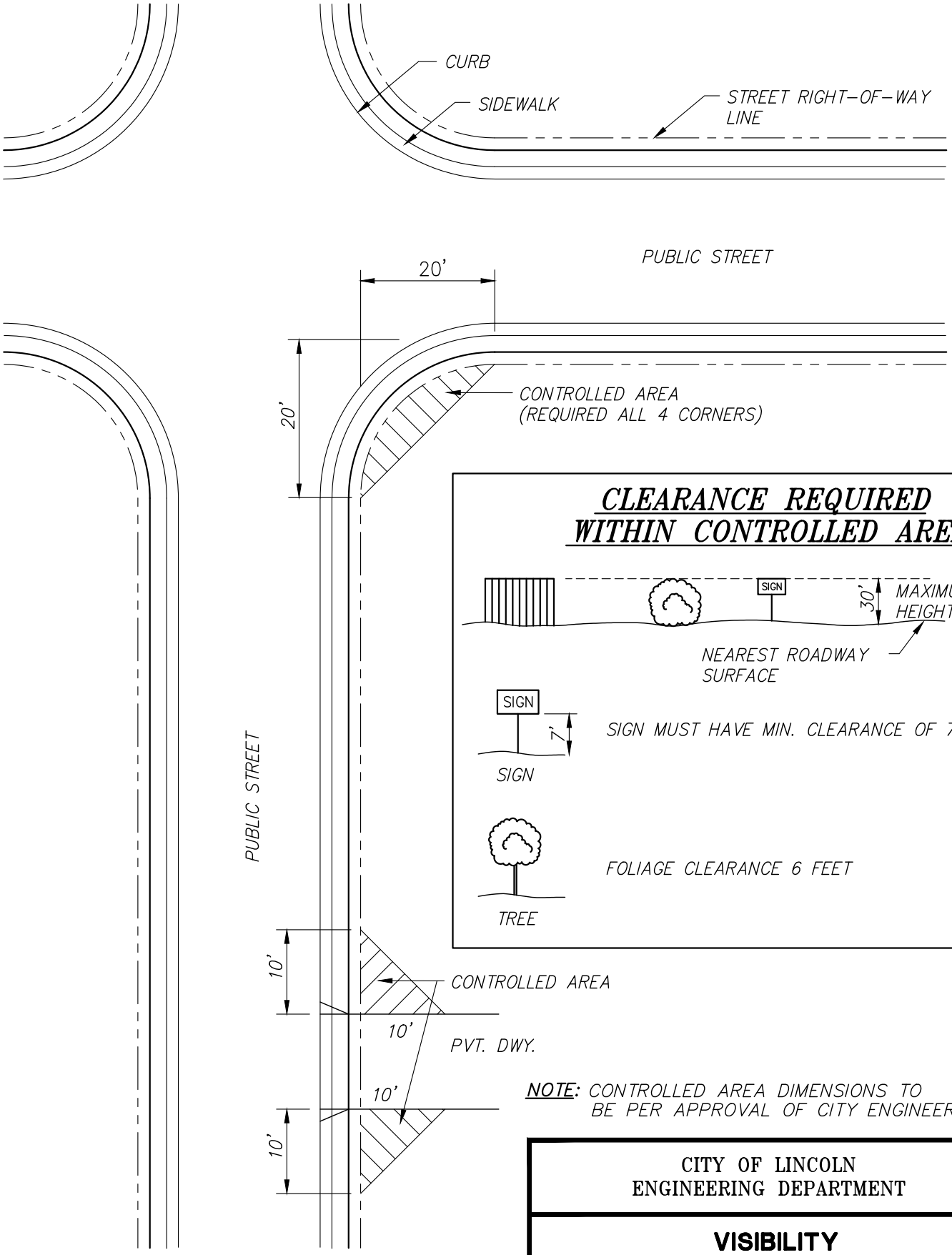

CLEARANCE REQUIRED WITHIN CONTROLLED AREA

NOTE: CONTROLLED AREA DIMENSIONS TO BE PER APPROVAL OF CITY ENGINEER.

CITY OF LINCOLN
ENGINEERING DEPARTMENT

VISIBILITY REQUIREMENTS RESIDENTIAL STREETS

REVISIONS:	DATES:	APPROVED:
		CITY ENGINEER DATE

SCALE: NONE
DATE: SEPTEMBER 2019
DRAWN BY: C.G.

H-23

NOTES:

1. BOX SURVEY MONUMENT TO BE LOCATED AS PER DIRECTION OF CITY ENGINEER.
2. NO FINAL ACCEPTANCE OF THE CONSTRUCTION SHALL BE ISSUED UNTIL THE SURVEY MONUMENTS ARE IN PLACE & THE CENTERLINE MONUMENT TIES ARE FURNISHED TO THE CITY ENGINEER'S OFFICE.

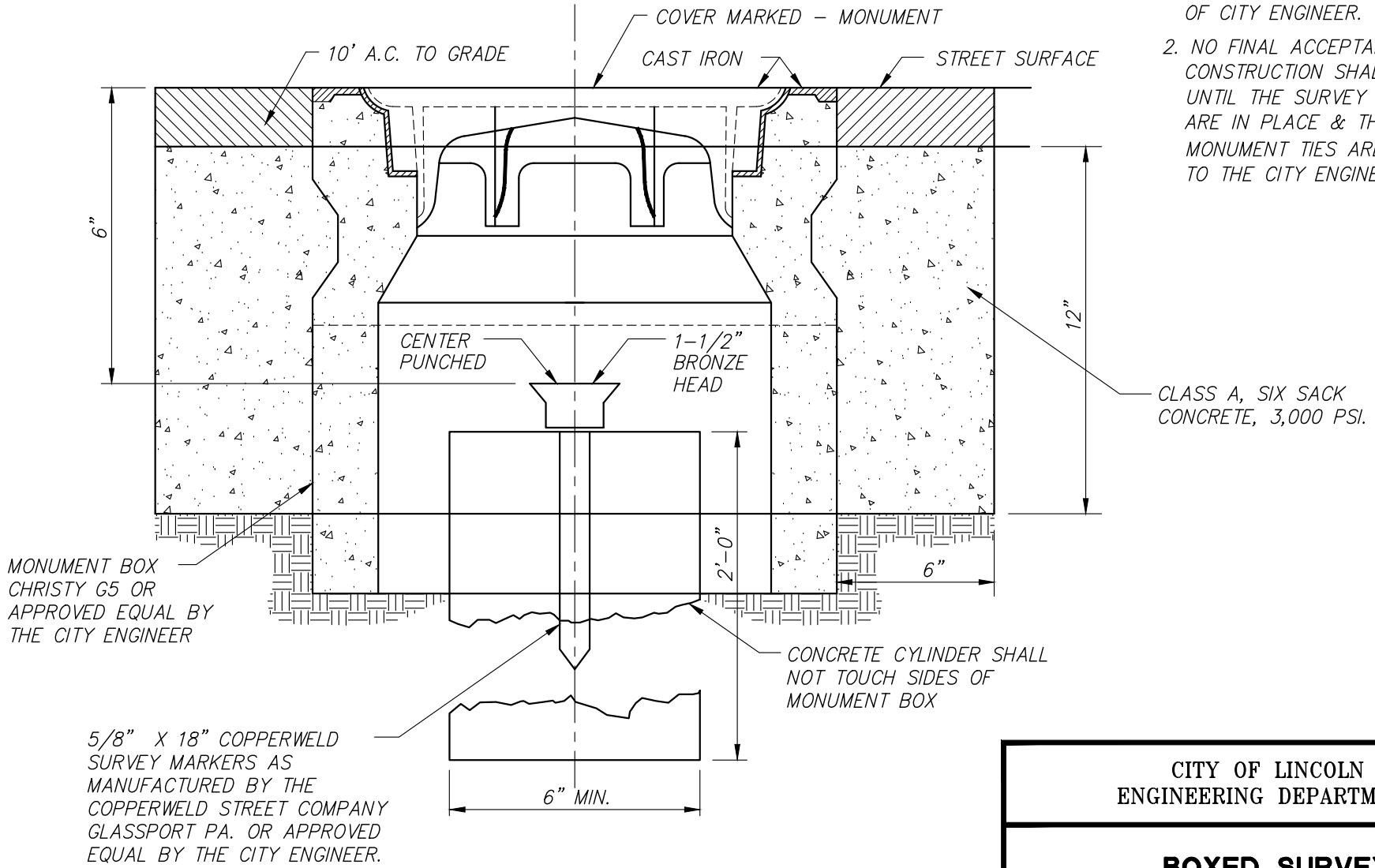

CITY OF LINCOLN
ENGINEERING DEPARTMENT

BOXED SURVEY MONUMENT

REVISIONS:	DATES:	APPROVED:
		CITY ENGINEER DATE

SCALE: NONE
DATE: SEPTEMBER 2019
DRAWN BY: C.G.

H-24

NOTES:

1. ASPHALT CONCRETE PATCH, SIX INCHES THICK OR THAT OF EXISTING PAVEMENT/AC, WHICHEVER IS MORE.
2. 24 INCHES OF TWO SACK CONCRETE SLURRY PER CALTRANS STANDARD SPEC. 19-3.03 OR APPROVED EQUAL.
3. EXISTING STREET PAVEMENT OR AC.
4. TACK COAT ON ALL VERTICAL PAVEMENT SAWCUTS.
5. SAWCUT TYPICAL EACH SIDE OF TRENCH IN EXISTING STREET.
6. PIPE EMBEDMENT. PER APPROVAL OF CITY ENGENEER.
7. PIPE OR CONDUIT.
8. IF EDGE OF "T" TRENCH IS WITHIN 2 FT OF EDGE OF PAVEMENT, FOG LINE, LANE LINE, BIKE LANE LINE, CENTERLINE, MEDIAN, EXISTING TRENCH RESTORATION, PAVEMENT SEAM, OR SIMILAR ROADWAY ELEMENT, "T" TRENCH SHALL BE WIDENED TO INCLUDE THAT ROADWAY ELEMENT.
9. TRENCH RESTORATION SHALL INCLUDE REPLACEMENT OF ALL PAVEMENT MARKINGS DAMAGED OR REMOVED IN THE WORK.
10. TRENCH RESTORATION IN CONCRETE PAVEMENT SHALL ALSO EXTEND TO THE NEAREST SCORE LINE OR EXPANSION JOINT.
11. RESTORATION OF CONCRETE PAVEMENT SHALL BE THE GREATER OF EXISTING CONCRETE OR DETAILS FOR SIMILAR CONCRETE ELEMENTS SPECIFIED ELSEWHERE IN THESE STANDARDS.
12. CONDITIONS AND REQUIREMENTS OF SECTION 3-2 OF THESE STANDARDS SHALL ALSO APPLY.

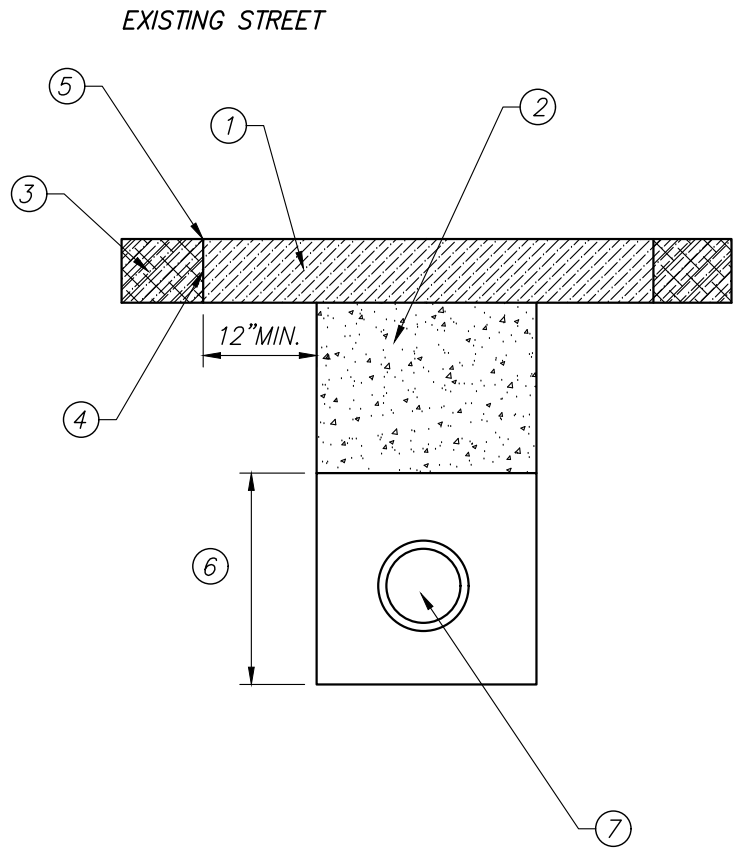

CITY OF LINCOLN
ENGINEERING DEPARTMENT

UTILITY "T" TRENCH IN EXISTING PAVEMENT

REVISIONS:	DATES:	APPROVED:
		CITY ENGINEER DATE

SCALE: NONE
DATE: SEPTEMBER 2019
DRAWN BY: C.G.

H-25

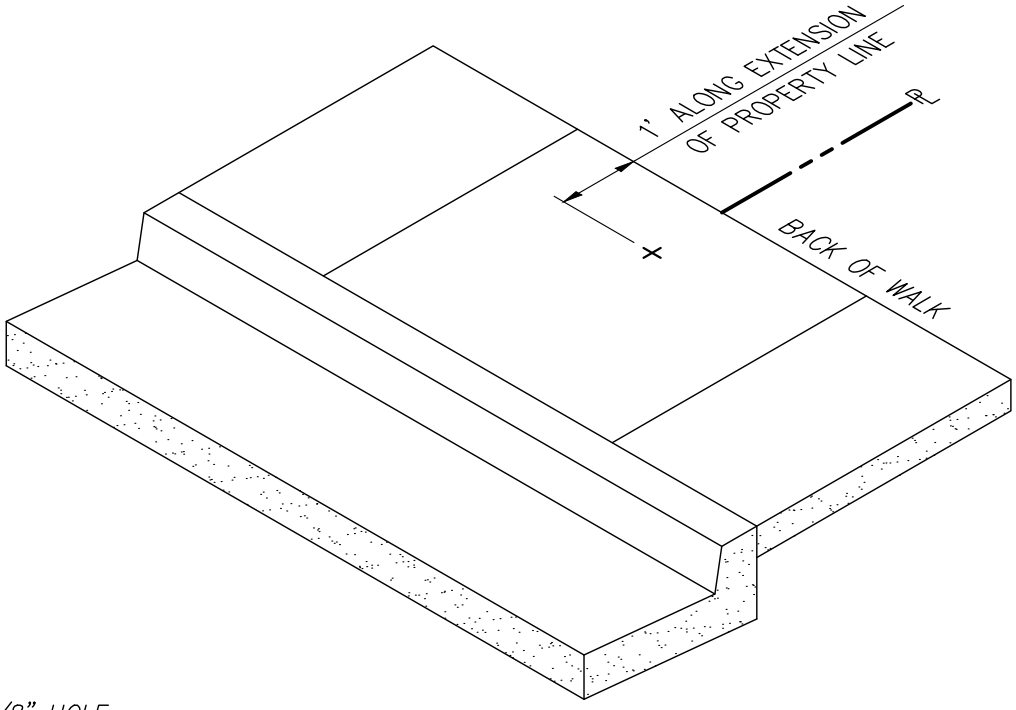

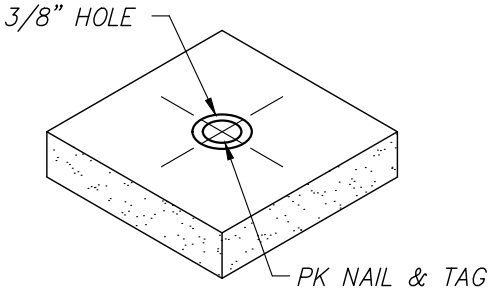

DRILL 3/8" DIA. HOLE, FILL WITH EPOXY OR LEAD AND INSTALL 3/4" LONG PK NAIL AND SURVEYOR TAG SO TOP OF HEAD IS FLUSH WITH WALK.

NAIL SET IN EPOXY OR LEAD

NOTE: NAIL AND TAG TO BE ADDED IF REQUIRED BY STATE BOARD OF REGISTRATION.

CITY OF LINCOLN
ENGINEERING DEPARTMENT

PROPERTY CORNER MARKER DETAIL

REVISIONS:	DATES:	APPROVED:
		CITY ENGINEER DATE

SCALE: NONE
DATE: SEPTEMBER 2019
DRAWN BY: C.G.

H-26

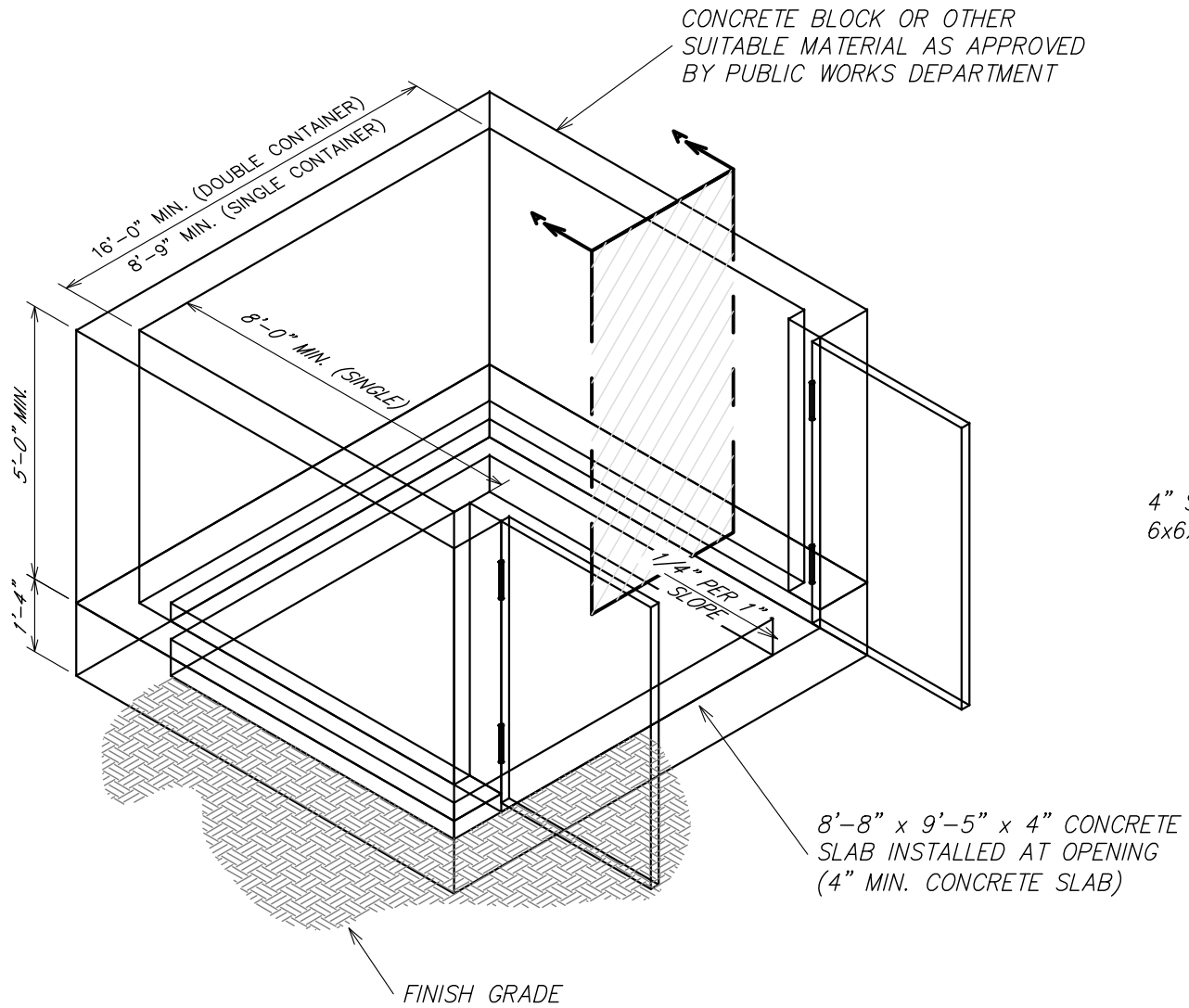

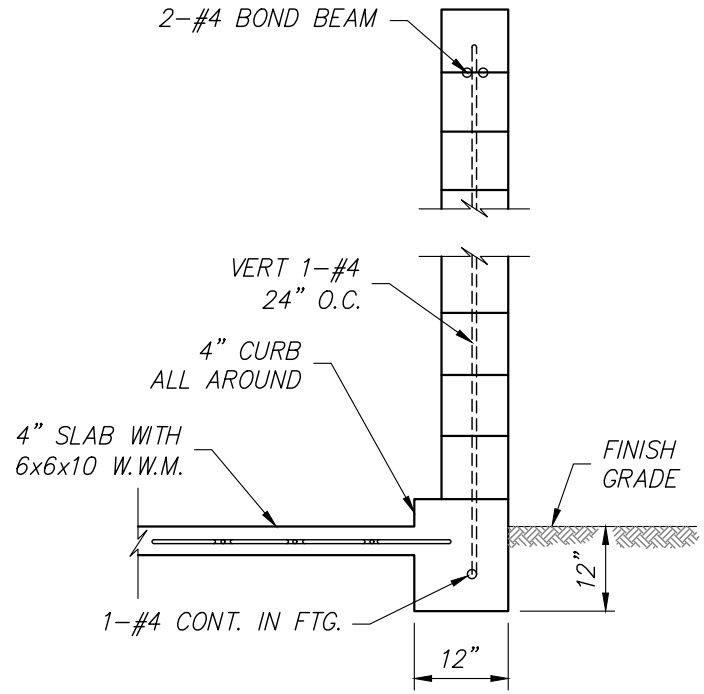

SECTION A-A

NOTE: *ENCLOSURE SHALL BE SET BACK 2' MIN. FROM ALL PROPERTY LINES AND PER ENTITLEMENT CONDITIONS.*

CITY OF LINCOLN
ENGINEERING DEPARTMENT

STANDARD ENCLOSURE FOR TRASH BIN

REVISIONS:	DATES:	APPROVED:
		CITY ENGINEER DATE

SCALE: NONE
DATE: SEPTEMBER 2019
DRAWN BY: C.G.

H-27

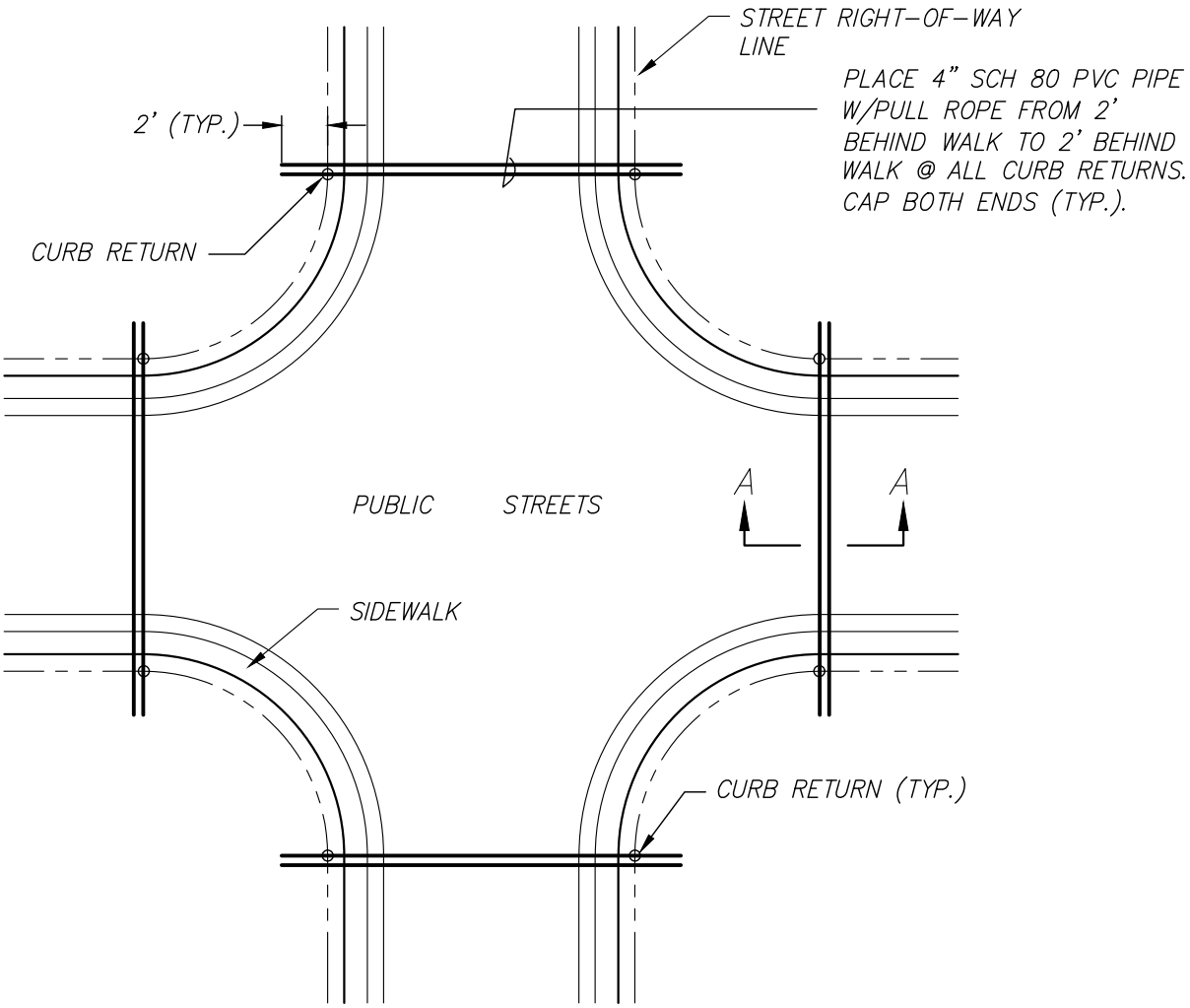

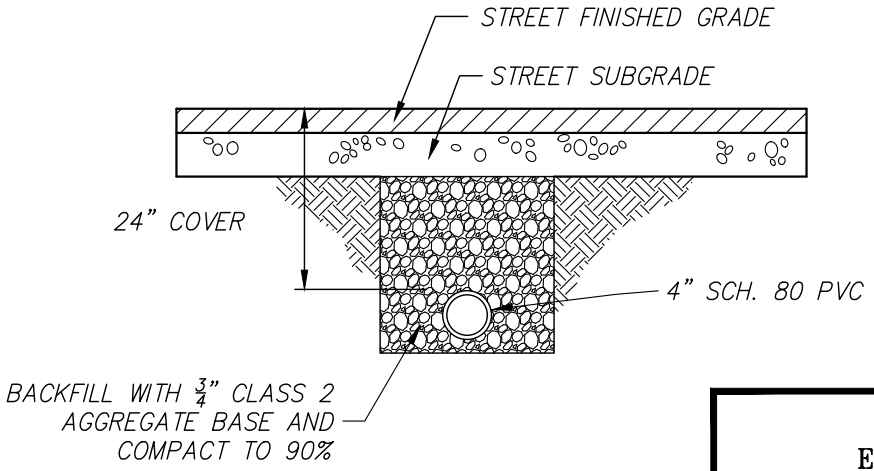

SECTION A-A
NO SCALE

CITY OF LINCOLN
ENGINEERING DEPARTMENT

CONDUIT FOR FUTURE CITY USE

REVISIONS:	DATES:	APPROVED:
		CITY ENGINEER DATE

SCALE: NONE
DATE: SEPTEMBER 2019
DRAWN BY: C.G.

H-28

RADII REQUIREMENTS

STREET R/W WIDTH	(R)	(T)
50'	50'	50' WITH NO PARKING
56'	58'	58' WITH PARKING
62'	65'	65'
72'	75'	75'

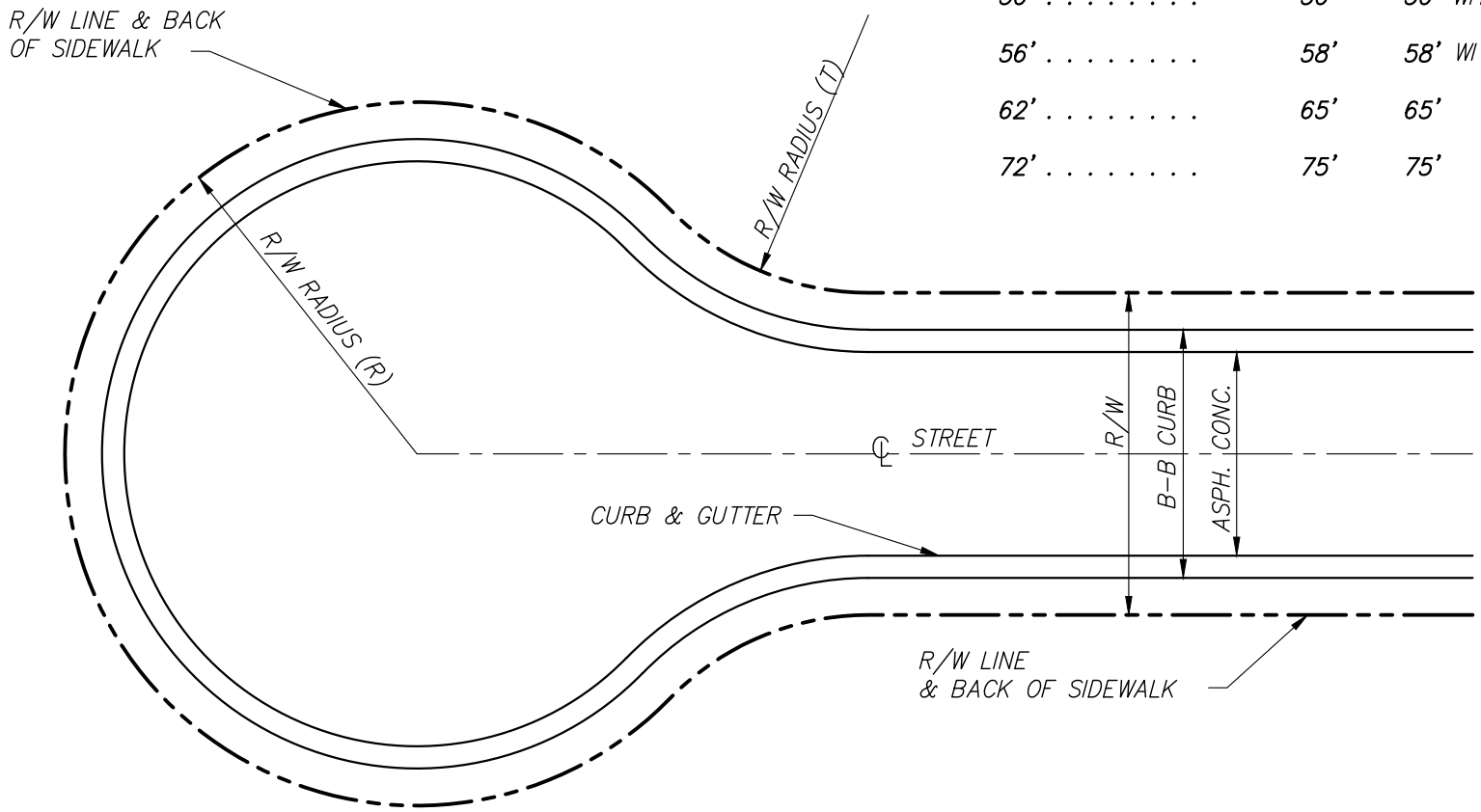

NOTE: A STANDARD CODE W14-2 (NO OUTLET) SIGN IS TO BE POSTED AT THE ENTRANCE TO ALL CUL-DE-SACS GREATER THAN 500' IN LENGTH

CITY OF LINCOLN
ENGINEERING DEPARTMENT

CUL-DE-SAC DETAILS

REVISIONS:	DATES:	APPROVED:
		CITY ENGINEER DATE

SCALE: NONE
DATE: SEPTEMBER 2019
DRAWN BY: C.G.

H-29

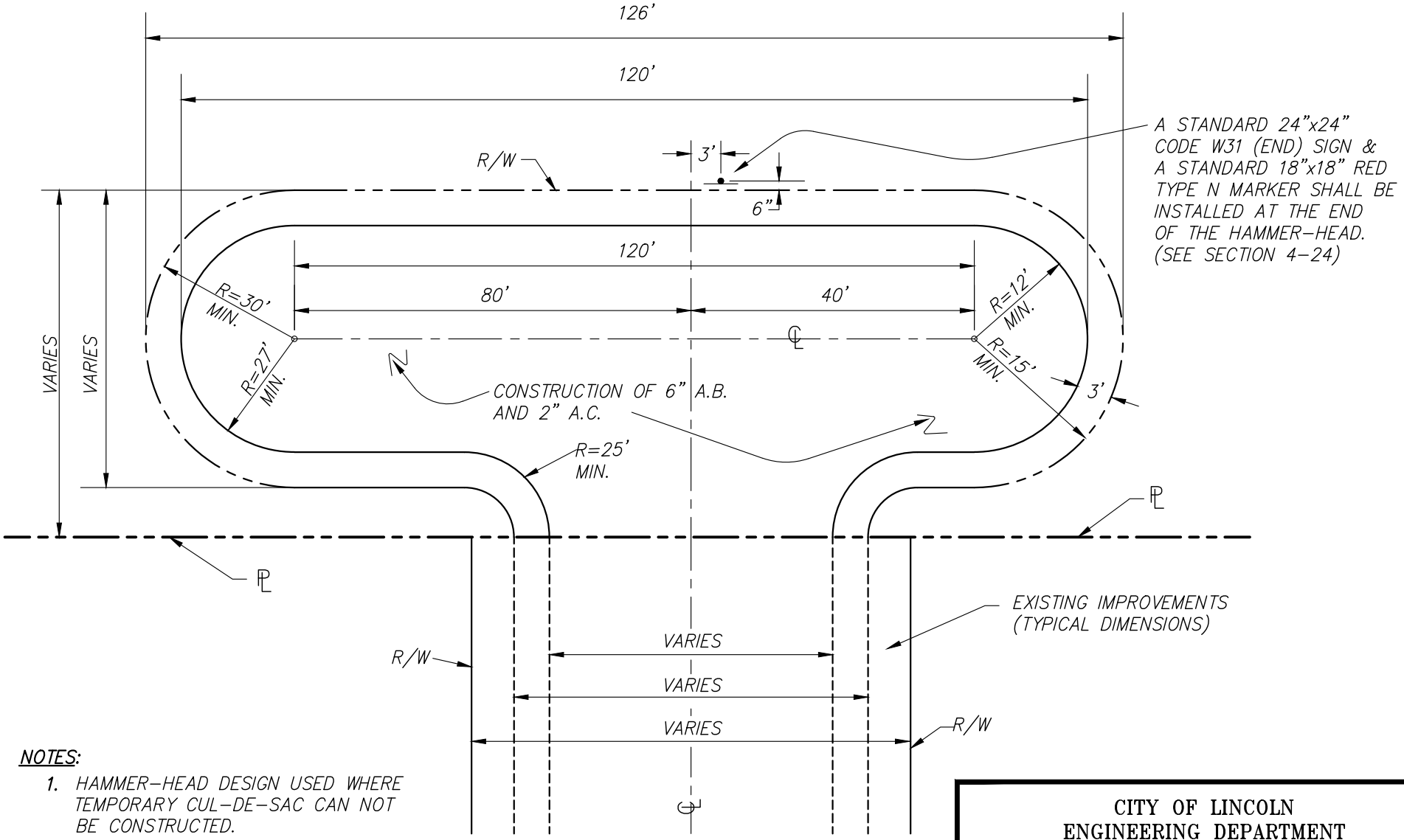

NOTES:

1. HAMMER-HEAD DESIGN USED WHERE TEMPORARY CUL-DE-SAC CAN NOT BE CONSTRUCTED.
2. OTHER HAMMER-HEAD DESIGN USED TO BE APPROVED BY CITY ENGINEER.

CITY OF LINCOLN
ENGINEERING DEPARTMENT

HAMMER-HEAD DESIGN

REVISIONS:	DATES:	APPROVED:
		CITY ENGINEER DATE

SCALE: NONE
DATE: SEPTEMBER 2019
DRAWN BY: C.G.

H-30

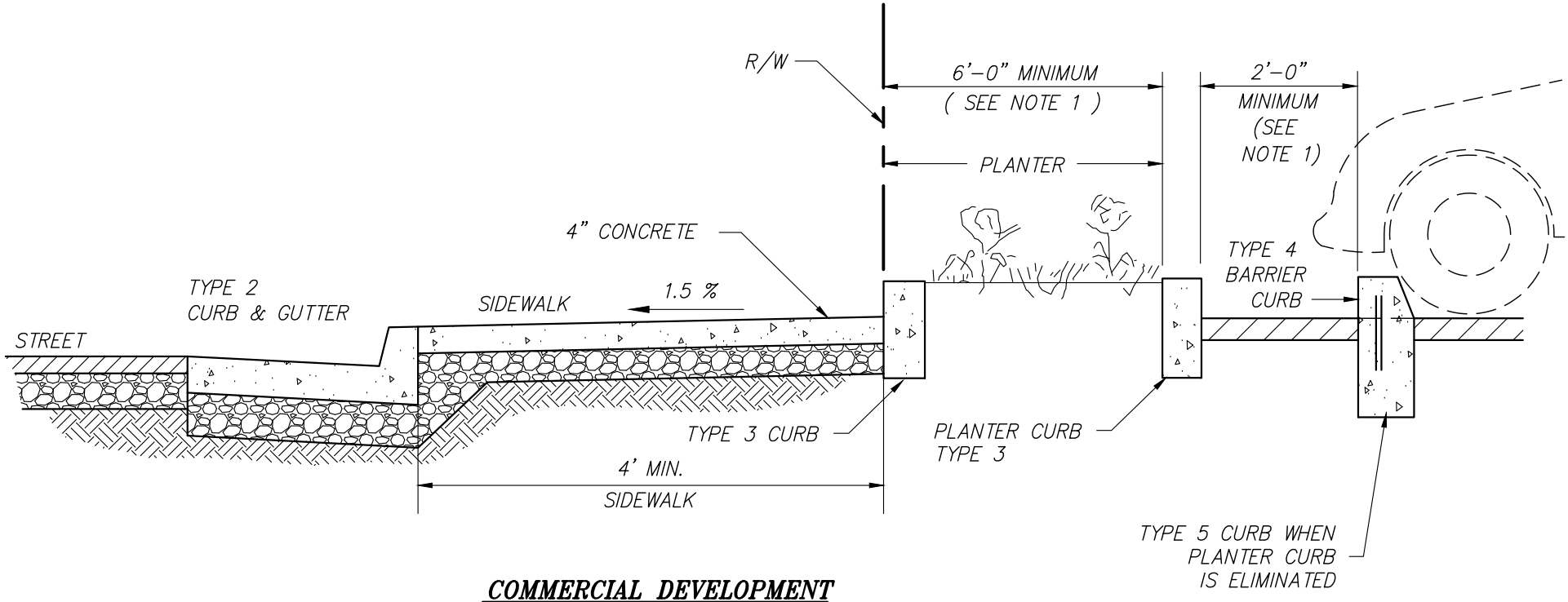

COMMERCIAL DEVELOPMENT

NOTES:

1. PLANTER CURBS ARE OPTIONAL. IF REQUIRED PLANTER WIDTH IS INCREASED A MINIMUM OF 2'-6" OR MORE.
2. PLANTER CURBS MAY BE OMITTED ONLY IF LAWN IS PLANTED TO BACK OF SIDEWALK AND CONTINUOUS BARRIER CURB IS PLACED AT LOCATION SHOWN.

CITY OF LINCOLN
ENGINEERING DEPARTMENT

PLANTER AND BARRIER CURB DETAILS

REVISIONS:	DATES:	APPROVED:
		CITY ENGINEER DATE

SCALE: NONE
DATE: SEPTEMBER 2019
DRAWN BY: C.G.

H-31

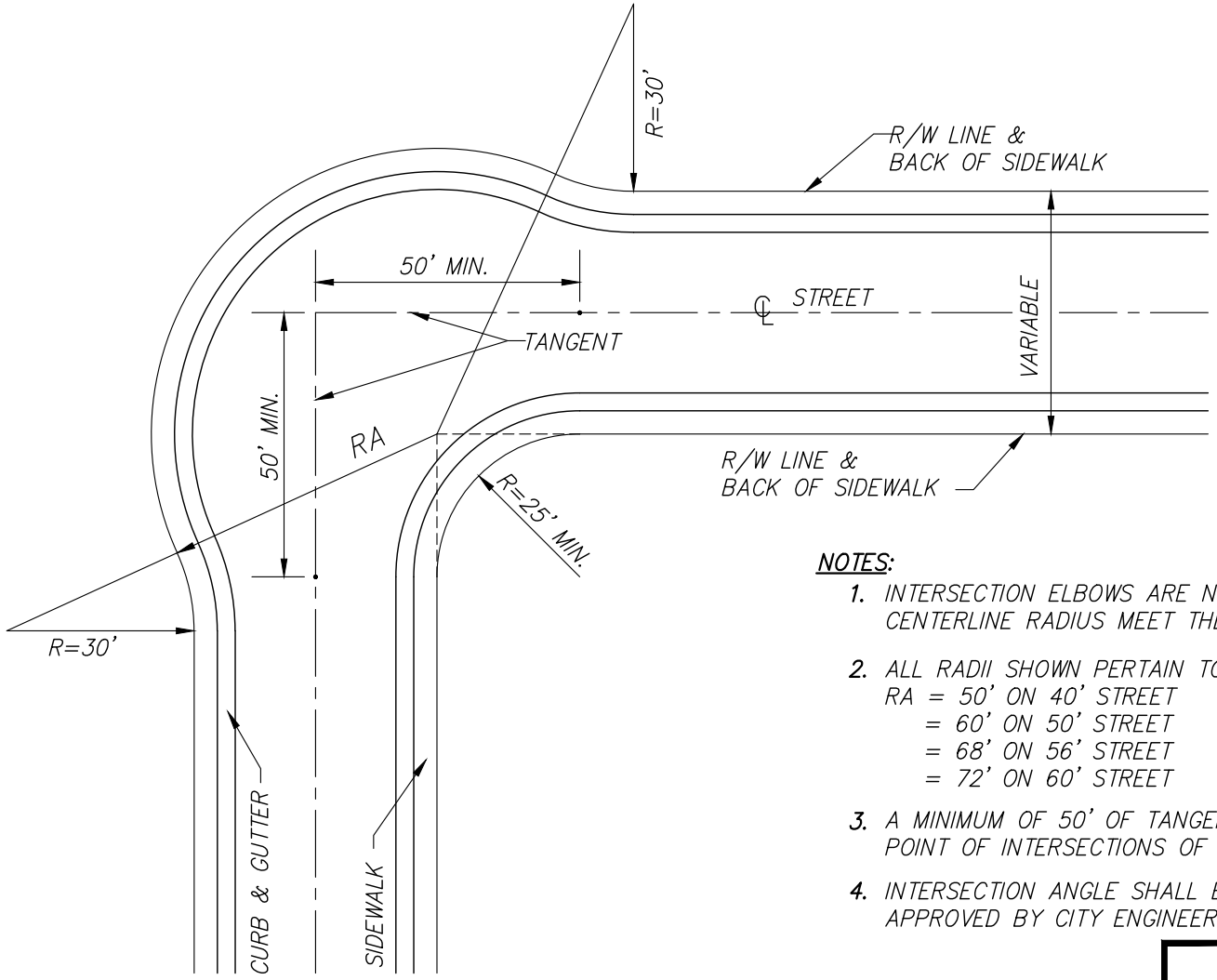

NOTES:

1. INTERSECTION ELBOWS ARE NOT REQUIRED WHERE THE CENTERLINE RADIUS MEET THE MINIMUM REQUIREMENTS
2. ALL RADII SHOWN PERTAIN TO R/W LINES.
   RA = 50' ON 40' STREET
   = 60' ON 50' STREET
   = 68' ON 56' STREET
   = 72' ON 60' STREET
3. A MINIMUM OF 50' OF TANGENT IS REQUIRED FROM THE POINT OF INTERSECTIONS OF THE CENTERLINES.
4. INTERSECTION ANGLE SHALL BE 90° ± 5° EXCEPT AS APPROVED BY CITY ENGINEER.

CITY OF LINCOLN
ENGINEERING DEPARTMENT

90 INTERSECTION ELBOW

REVISIONS:	DATES:	APPROVED:
		CITY ENGINEER DATE

SCALE: NONE
DATE: SEPTEMBER 2019
DRAWN BY: C.G.

H-32

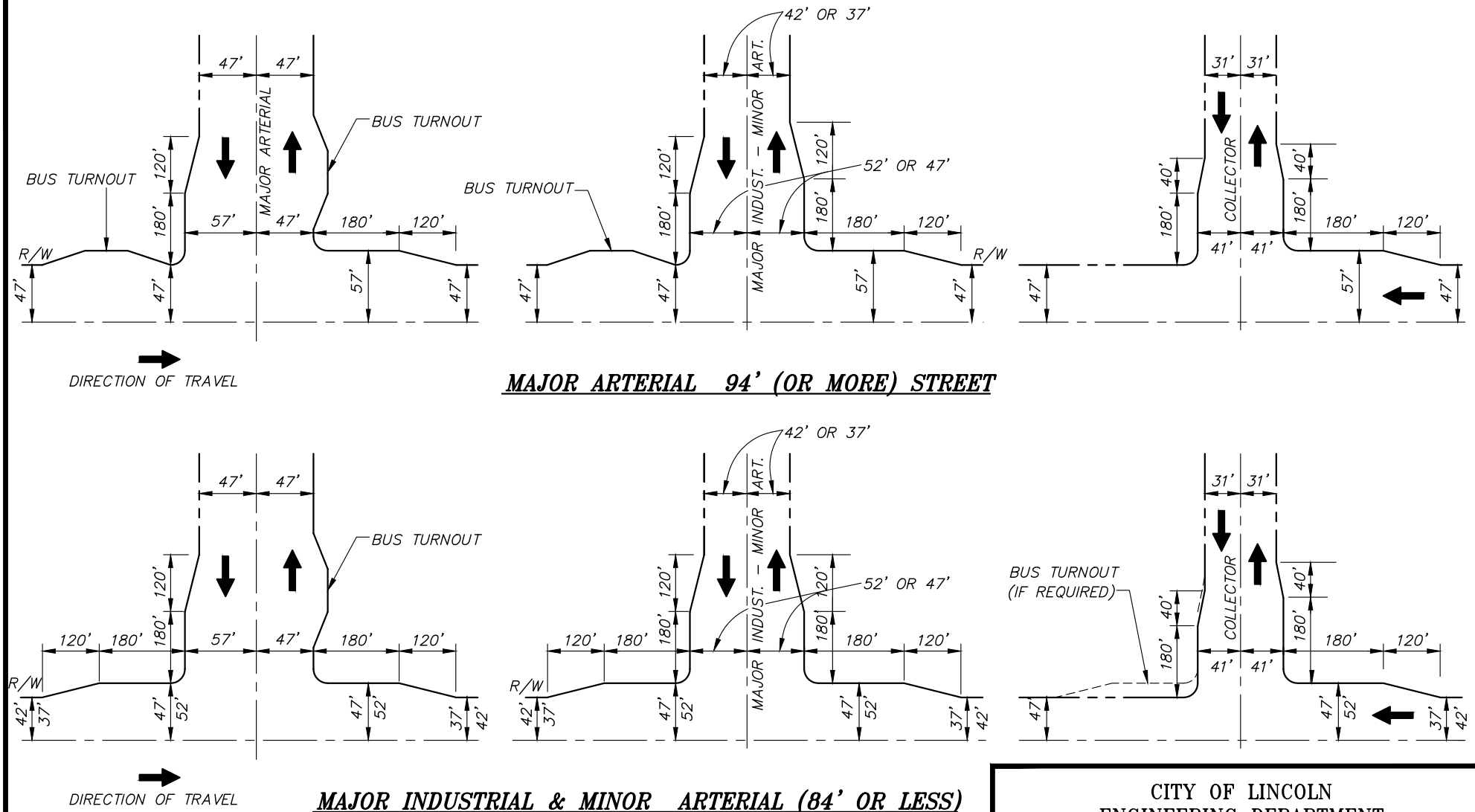

MAJOR ARTERIAL 94' (OR MORE) STREET

MAJOR INDUSTRIAL & MINOR ARTERIAL (84' OR LESS)

NOTES:

1. RADIUS AT CORNERS OF ALL INTERSECTIONS IS 35' MIN.
2. WIDENING NOT USUALLY REQUIRED AT COLLECTOR/ COLLECTOR AND SMALLER INTERSECTIONS.
3. SEE BUS TURNOUT STANDARD FOR DIMENSIONS.
4. INCLUDES 50' MINOR OR COLLECTOR STREET INTERSECTING ARTERIAL.
5. SEE DETAILS H-20 & H-21.
6. ANY MODIFICATIONS TO THESE STANDARDS MUST BE APPROVED BY THE CITY ENGENEER.

REVISIONS:	DATES:	APPROVED:
		CITY ENGINEER DATE

CITY OF LINCOLN
ENGINEERING DEPARTMENT

WIDENING DETAILS AT MAJOR STREET INTERSECTIONS

SCALE: NONE
DATE: SEPTEMBER 2019
DRAWN BY: C.G.

H-33

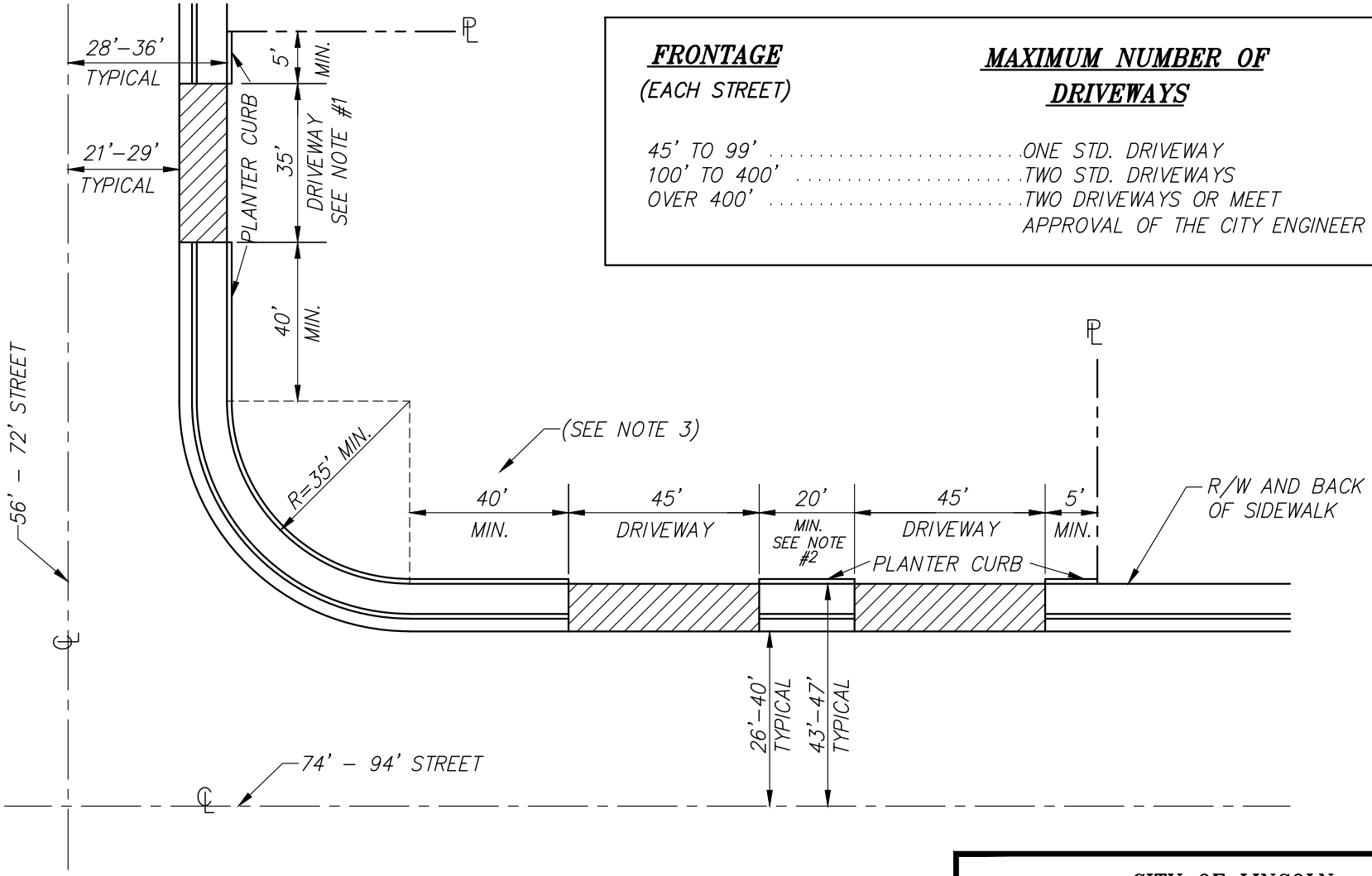

FRONTAGE (EACH STREET)	***MAXIMUM NUMBER OF DRIVEWAYS***
45' TO 99'	ONE STD. DRIVEWAY
100' TO 400'	TWO STD. DRIVEWAYS
OVER 400'	TWO DRIVEWAYS OR MEET APPROVAL OF THE CITY ENGINEER

NOTES:

1. 25' TO 35' WIDTH DRIVEWAYS MAY BE APPROVED ON 56 TO 72 FOOT STREETS.
2. 20' MINIMUM ALLOWABLE DISTANCE BETWEEN DRIVEWAYS FOR LESS THAN 200' FRONTAGE AND 40' MINIMUM ALLOWABEL DISTANCE BETWEEN DRIVEWAYS FOR FRONTAGES OF 200' AND OVER.
3. ALL EXCEPTIONS TO THIS STANDARD MUST BE APPROVED BY THE CITY ENGINEER.

CITY OF LINCOLN
ENGINEERING DEPARTMENT

COMMERCIAL FRONTAGE AND DRIVEWAY REGULATIONS

REVISIONS:	DATES:	APPROVED:
		CITY ENGINEER DATE

SCALE: NONE
DATE: SEPTEMBER 2019
DRAWN BY: C.G.

H-34

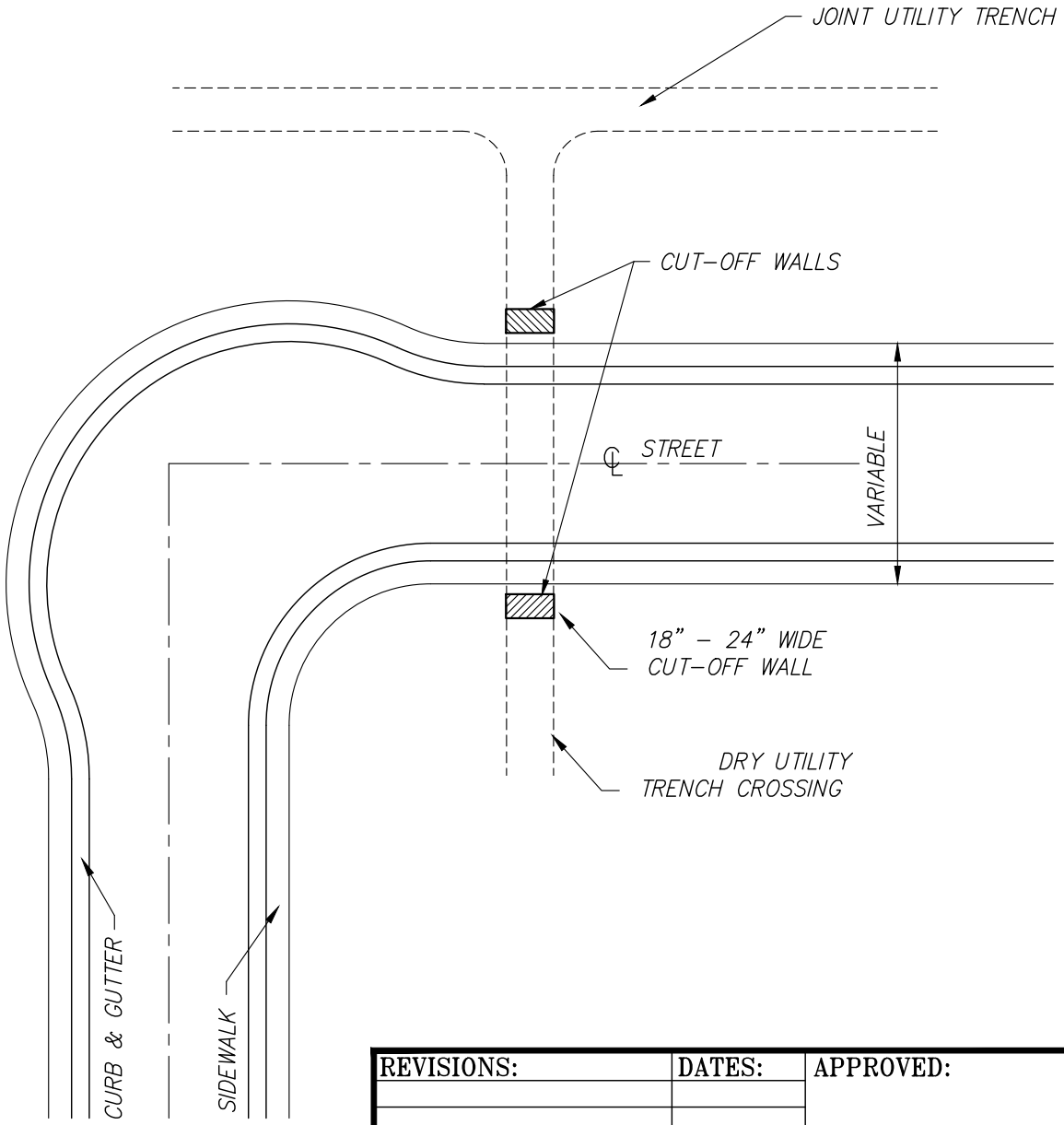

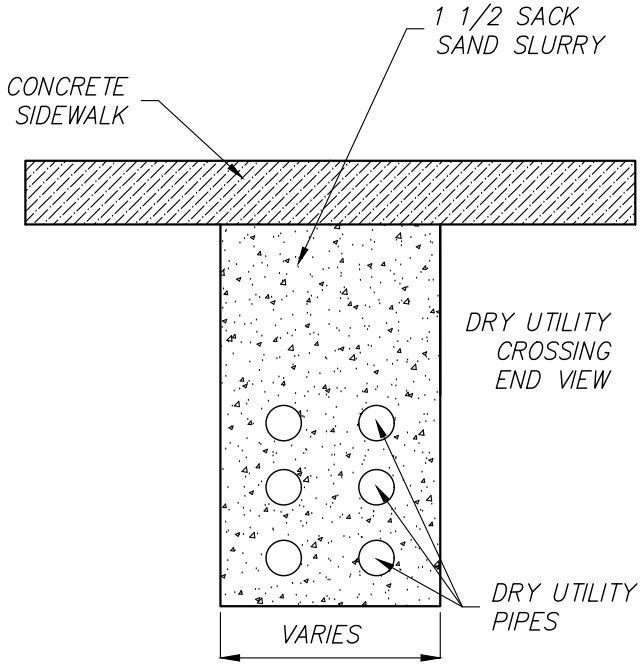

CITY OF LINCOLN
ENGINEERING DEPARTMENT

UTILITY TRENCH CROSSING
CUT-OFF WALLS

REVISIONS:	DATES:	APPROVED:
		CITY ENGINEER DATE

SCALE: NONE
DATE: SEPTEMBER 2019
DRAWN BY: C.G.

H-35

SECTION 4

DOMESTIC WATER SUPPLY SYSTEM (W)

4-1 General W-1
4-2 Connection to Existing Facilities W-2
A. City Tap W-2
B. Existing Stub (Contractor Personnel) W-3
4-3 Construction Staking W-3
4-4 Trench Work W-4
A. Existing Pavement W-4
B. Water in Trench W-4
C. Unsuitable Trench Bottom W-5
D. Open Trench W-5
E. Steel Trench Plates W-5
F. Temporary W-5
G. Pipe Support W-5
4-5 Pipe Installation W-5
A. Manufacturers Recommendations W-6
B. Pipe Cleanliness W-6
C. Cathodic Protection W-6
D. Placing Pipe W-6
E. Joining Pipe W-6
F. Covering Pipe W-6
G. Tracing Wire W-6
H. Tracing Wire W-6
I. Pipe Protection W-7
J. Polyvinyl Chloride (PVC) Pressure Pipe Installation W-7
K. Ductile Iron Pipe (DIP) W-7
L. Transitions W-8
M. Borings W-8
4-6 Service Installation W-9
A. Service Runs W-9
B. Saddles W-9
C. Service Manifolds W-9
D. Telemetering W-10
E. Backflow Assembly W-10
F. Curb Marking W-10
G. Double Meter Service W-10
4-7 Service Abandonment W-10
4-8 Mainline Abandonment W-10
4-9 Appurtenances Installation W-10
A. Pipe Protection W-10
B. Gate Valves W-10
C. Bolt and Nut Protection W-11
D. Pressure Reducing Station W-11
E. Fire Hydrant Bolts W-11
F. Marking Fire Hydrants W-11
G. Fire Hydrant Paint W-11

H. Dead Lines W-11
I. Insulation W-11
4-10 Concrete Cradles, Arches, & Encasements W-11
4-11 Pipe Backfill QA/Q W-12
A. Performance Based QA/QC (Non-Testable Materials) W-12
B. Design Based QA/QC (Non-Testable Materials) W-13
C. Trench Backfill Material W-13
D. Pipe Zone Backfill W-14
E. Compaction Test Methods W-14
F. Testing Frequencies W-14
G. Marking W-15
H. Marking in Unpaved Areas W-15
4-12 Testing Procedures W-15
A. Pressure Test W-15
B. Chlorine Disinfection W-16
C. Water Quality Testing W-17
D. Tying into the City System W-18
E. Continuity Testing W-18
4-13 Repairing Installed Improvement W-18
A. Pipe Replacement W-18
B. Backfill W-18
C. Pipe Protection W-18
4-14 Punch List Process W-18
4-15 Materials W-18
A. Approved Equal W-18
1. Product W-19
2. Contact W-19
3. Reference W-19
B. Unapproved Materials W-19
C. Water Main W-19
1. PVC Pressure Pipe W-19
2. Ductile Iron Pipe W-19
D. Services W-20
1. Copper Tubing W-20
2. Brass Material W-20
a. Brass Pipe W-20
b. Brass Fittings W-20
c. Brass Fittings for Copper Tubing W-20
3. Corporation Stops W-20
4. Curb Stops W-21
5. Dielectric Tape W-21
6. Service Saddles W-21
E. Appurtenances W-22
1. Air Release Valves W-22
2. Backflow Assembly W-22
3. Blocking for Boxes Assembly W-23
4. Blow Off W-23

5. Fittings W-23
a. PVC Pipe W-23
b. Ductile Iron Pipe W-23
6. Freeze Protection for Backflow Assemblies W-24
7. Gaskets W-24
8. Hydrants W-24
9. Hydrant Bury W-24
10. Hydrant Bury Extensions W-24
11. Hydrant Check Valves W-25
12. Location Stakes W-25
13. Mainline Valve Lock-Out W-25
14. Manhole Frame and Cover W-25
15. Meters W-25
16. Meter Idlers W-25
17. Meter Setters W-25
18. Meter Spud Couplers W-25
19. Nuts and Bolts W-26
20. Nylon Bushings W-26
21. Patching Material W-26
22. Polyethylene Encasement W-26
23. Pressure Regulators W-26
24. Restraints W-27
25. Riser Stock W-27
26. Sampling Stations W-27
27. Sap Seal W-27
28. Service Boxes and Lids W-27
29. Silicone W-27
30. Telemetering Conduit W-27
31. Tracing Wire W-28
32. Tracing Wire Connectors W-28
33. Tracing Wire Mastic Tape Seal W-28
34. Valves W-28
35. Valves Boxes W-28
36. Water Pipe Marking Tape W-28
37. Zinc Caps W-28
4-16 Domestic Water System Details W-29

[THIS PAGE INTENTIONALLY LEFT BLANK]

SECTION 4

DOMESTIC WATER SUPPLY SYSTEM (W)

4-1 **General** – All water pipe, fittings, valves, fire hydrants, blow offs, air release valves and other appurtenances will be installed in strict accord with the approved project improvement plans, these Public Facilities Improvement Standards, the requirements of the American Water Works Association (AWWA), the Caltrans Standard Specifications and Standard Plans, and as recommended by the material manufacturer.

Should conflicts arise between documents, the approved project improvement plans will govern over these Public Facilities Improvement Standards. These Public Facilities Improvement Standards will govern over the AWWA requirements. The AWWA requirements will govern over the Caltrans Standard Specifications. In the event of conflict between applicable documents and/or plans, the most restrictive will prevail.

The manufacturer's guidelines for all materials to be used on the project will be present on the construction site at all times.

Developers and Contractors will comply with all applicable City, County, State, and Federal laws and regulations relating to construction of the improvements as required.

If the City Engineer determines that any work on private or public property constitutes a hazard to the health, safety, or welfare of the public; endangers property; adversely affects the safety, use or stability of adjacent property; an overhead or underground utility, or a public way, watercourse or drainage channel; or could adversely affect the air quality; or the water quality of any water bodies or water courses; the City Engineer may issue a stop work notice to the owner of the property upon which the condition is located, or other person or agent in control of such property. Upon receipt of such stop work notice, the recipient will, within the period specified therein, stop all work, obtain any necessary permits and conform to the requirements identified in the stop work notice. The City Engineer may require the submission of plans or other reports, detailed construction recommendations, studies, or other engineering data prior to and in connection with any corrective or proposed work or activity.

All improvements within the City of Lincoln will be performed by a contractor licensed in accordance with the California Contractors State License Law, Business and Professions Code Section 7000 et seq.

All persons, firms, partnerships, or corporations doing business of any nature in the City of Lincoln will have a current Business License as stated in Chapter 5.04 - License Tax, City of Lincoln Municipal Code. This includes developers, engineers, and contractors.

Refer to the City of Lincoln's Design Criteria & Procedures Manual for design information.

All projects will be in compliance with the State water quality requirements for erosion and sedimentation control at all times.

4-2 **CONNECTION TO EXISTING FACILITIES** – Connection to existing City water facilities may be made only with written approval of the City Engineer.

No less than one working day prior to any scheduled water shutdowns, all materials anticipated to be necessary to complete the work and re-establish water services will be inventoried and inspected in the field by the City Engineer or his designated representative. The only exception to this, will be building materials that are of common variety, readily available, and have a limited life for installation, such as ready mix concrete.

A. City Tap – The City Engineer has the option of having City personnel make the required system tap. Should the City perform the tap, the cost for the work will be on a time and materials basis and reimbursable to the City.

The Contractor will be responsible for these tasks associated with the tap:

1. Coordinating the work requested with the City Engineer and the Water Department. This will include discussions on provisions for materials and equipment required to complete the work and notification to affected residents.

2. Providing an approved traffic control plan and required traffic control, including signage.

3. Providing any necessary lighting if the tap is to be performed at night.

4. Excavating the work area as directed by the City Engineer including providing any necessary sheeting/shoring, backfilling and compacting the excavation(s) in accordance with City standard detail W-1 upon completion of the tap.

5. **Under no circumstances will anyone other than a representative of the City of Lincoln Water Division open or close valves in a City operated system.**

B. Existing Stub (Contractor Personnel) – The Contractor will be responsible for these tasks associated with the connection to an existing stub:

1. All connections will take place in the presence of the City Engineer or designated representative.

2. Connection will take place only after the newly constructed water system has successfully passed all required testing procedures as established in Section 4-12 of these Public Facilities Improvement Standards, and is approved by the City Engineer.

3. **Under no circumstances will anyone other than a representative of the City of Lincoln Water Division open or close valves in a City operated system.**

4. Care will be taken to provide a safe and sanitary connection site.

5. Dewatering of both the new and existing water mains will take place to prevent contamination by trench water.

6. All material used in the tie-in will be new, clean, and swabbed with chlorine in accordance with the latest edition of AWWA C651.

4-3 **CONSTRUCTION STAKING** – Construction staking will be provided by the Developer/Contractor for all water system improvements. Staking will provide the station, the offset, and the cut to the nearest 0.1-foot. Stakes will be provided at a minimum of every 50-feet in tangent sections and every 25-feet in curved sections. Vertical curves will be staked every 10-feet in approved vertical curve sections. The City Engineer will be given two sets of cut-sheets prior to construction.

4-4 **TRENCH WORK** – Earthwork required to construct water facilities will be performed to the lines and grades shown on the approved project improvement plans. At all times the trench and the work area surrounding the trench will be kept in a safe manner to adequately protect the public and the workers. The person designated as the project "competent person" will be onsite during all work activity. The specified trench width will be maintained to a height of one-foot over the top of the pipe for all trench wall geometry cross-sections including: vertical walls, steeped vertical walls, V-walls, and combined vertical-V-walls.

Prior to placing bedding, trench backfill materials, or pipes on the trench bottom subgrade surface, the trench bottom will be: relatively free of loose materials, have a relatively smooth appearance, have a relatively constant grade, and be firm and unyielding.

Refer to Detail W-1 and Section 4-11 of these Public Facilities Improvement Standards Section for additional information on trench materials.

A. **Existing Pavement** – When the trench is in an existing surfaced area, the pavement will be sawed or scored and broken ahead of the trenching operations. The pavement will be cut accurately on neat and parallel lines. Trench restorations will conform to the requirements of Standard Detail H-25.

B. **Water in Trench** - When water is encountered in the trench, the geotechnical engineer will be contacted to provide input to the City Engineer. The trench will be kept dry in a manner approved by the City Engineer until the placement of the approved bedding material, laying and jointing of the pipe, and placement of the shading material has been completed and approved. The City will consider, on a case-by-case basis, the use of conventional, in trench, sump- dewatering methods provided that the trench is backfilled with washed, crushed rock or equivalent to at least a height of 3-feet higher than the local ground water table or perched water whichever is at a higher elevation. The crushed rock may require wrapping with a geotextile filter fabric depending upon the expected ground water flow velocities. Installation of ground water monitoring wells can be used to determine the elevation of the water table and/or perched ground water.

   The City requires a dewatering system be designed and implemented in all areas where trenches will be excavated and native backfill will be placed below the local ground water table and/or perched ground water. Installation of ground water monitoring wells can be used to determine the elevation of the water table and/or perched ground water. The dewatering system may include, but not be limited to: driven well point screens and vacuum extraction systems, drilled and installed screened wells with submersible pumps or vacuum extraction systems, or other dewatering methods. Use of in trench sumps will not be allowed as the sole dewatering method. The owner's/developer's geotechnical consultant should develop a dewatering work plan for review and approval by the City prior to implementation.

   The manner employed to dispose of water pumped from an excavation will be subject to the approval of the City Engineer and will conform to all water pollution constraints of the City and other agencies. Ground water pumped from the trench will be disposed of in a manner to not cause injury to public or private property, or to constitute a nuisance or menace to the public.

C. **Unsuitable Trench Bottom –** If the bottom of the trench is soft, yielding, or otherwise unsuitable as a foundation for the pipe in the opinion of the geotechnical engineer, or City Engineer, the unsuitable material will be removed to the depth necessary to provide a stable and satisfactory foundation. Three-quarter inch crushed rock will be placed in the trench to provide a stable foundation. The rock is in addition to the required pipe bedding used in the pipe zone. All rock will be wrapped with geotextile fabric (see Section 3-6 , Type “C” material).

D. **Open Trench –** The trench will be in a safe condition at all times. In roadway areas and locations accessible to the public, trenches will be excavated only as far in advance of pipe laying as can be backfilled in the same day. In addition, the maximum total length of open trench should be no more than 300-feet ahead of the pipe laying operation, or 200-feet behind the pipe laying operation. A trench in an existing roadway that is not to be regraded is defined as "open" until backfilled to subgrade or the original ground line.

E. **Steel Trench Plates –** Steel trench plates will not be used over open trench areas without the approval of the City Engineer. All steel plates will be adequately restrained to eliminate shifting. Trench plates do not eliminate the need for shoring when required. Temporary asphaltic plant mix ("cut-back") at least one-foot in width will be used for a transition on each edge of the plate. "Rough Road" or "Bump" signs will be installed 200-feet on each side before the steel plate. The sign will only be mounted to an operable, lighted barricade for a maximum of 24-hours. The sign will be mounted to a 4-inch x 4-inch post if the placement exceeds 24- hours.

F. **Temporary Surfacing –** In roadway areas, a temporary asphalt plant mix "cut-back" surface not less than 2-inches in thickness will be placed immediately after the top backfill has been completed and compacted. This temporary surface will be maintained at a level surface until removal. The temporary surfacing material will be removed just prior to placing the permanent surface material.

G. **Pipe Support** – Bedding will provide uniform and continuous support along the barrel of the pipe. Bell holes shall be excavated per manufacturer’s recommendations. The minimum depth of bedding material will be provided under the bell. Care shall be taken to ensure that the bell hole is no larger than necessary to accomplish proper joint assembly. Blocking of the pipe is not permitted.

4-5 **PIPE INSTALLATION** – Water pipe will be installed in accordance with these provisions:

A. **Manufacturers Recommendations** – All installations will follow manufacturer's recommendations unless otherwise noted on the approved plans. The manufacturer's installation guide will be on the job site at all times.

B. **Pipe Cleanliness** – The Contractor will keep the pipe interior free from foreign materials and in a clean and sanitary condition until acceptance by the City. At times when pipe laying is not in progress, the open pipe end will be sealed with a tight cap or plug to prevent foreign matter from entering the pipe. Plywood, polyethylene film or cardboard is unacceptable. These provisions will apply to the lunch-hour as well as overnight.

C. **Cathodic Protection** - Cathodic protection will be installed as shown on the project plans. Cathodic test station locations will be marked with "CTS" in 2-inch letters in the curb.

D. **Placing Pipe** - Care will be taken when lowering pipe into the trench to protect the pipe from damage. Chains are not permitted. The pipe will be laid carefully to the lines and grades shown without grade breaks, unless designed with such, or to minimum depths shown on the approved plans. If field conditions exist such that the pipe may not be laid to the specified grade, the approved project improvement plans will require revisions prior to proceeding with construction.

E. **Joining Pipe** - Pipe sections will be correctly jointed to form a smooth flowline. Care will be taken in placing the pipe and making field joints.

F. **Covering Pipe** - Improvements installed and covered without proper inspection will be exposed and inspected as required by the City Engineer.

G. **Pipe Restraints and Fittings** - Pipes will be mechanically restrained to the length specified in the approved plans, using materials specified herein. Thrust blocks and restraints will be used on all fittings 45 degrees and greater. Fittings 22.5 degrees and less will require restraint joints only, per EBAA specs or equal. Fitting sections will be mechanical and/or flanged fittings with MEGALUG® (EBAA) or equal. DIP pipe and straight pipe sections may use grip rings/gaskets. All fittings and appurtenances will maintain a minimum of 18-feet of restrained pipe into the fitting from all directions or as required by the manufacturer's manual and the approved project improvement plans.

H. **Tracing Wire** - A continuous No. 10 copper insulated tracing wire will be attached to mains, service lines and appurtenances per the Standard Details and these provisions:

1. Tracing wire will be continuous between main line valve boxes and fire hydrants. It shall be attached to the top of the pipe with 10-mil vinyl tape every 5 feet.

2. Tracing wires through valve boxes will be placed outside of riser, but inside the box.

3. Tracing wire in manholes and vaults will be attached inside the facility within one foot of the rim.

4. Wire splices will be located above ground and inside of valve boxes and made per Standard Detail W-9.

I. **Pipe Protection** - All underground metal (ductile iron, valves, fittings, copper, brass, etc.) Will be wrapped in 8-mil minimum thickness polyethylene encasement.

J. **Polyvinyl Chloride (PVC) Pressure Pipe Installation** - PVC will be installed in accordance with the AWWA Manual M23, AWWA C907, and the manufacturer's recommendations, except as otherwise provided herein:

1. PVC Pipe will have been manufactured within an 18-month period prior to installation. All pipe to be made in U.S.A.

2. Pipe and gaskets will be kept clean and protected against sunlight and heat damage.

3. Pipe showing signs of physical damage or excessive ultraviolet exposure will be rejected and will be immediately removed from the job site.

4. The pipe will be installed with the manufacturing label showing on the top.

5. The reference mark or stab line on the spigot end must be flush with the bell end and visible for inspection.

6. The beveled end of the pipe will be cut off before placement into a mechanical joint.

K. **Ductile Iron Pipe (DIP) –** DIP will be installed in accordance with the standards for "Installation of Ductile Iron Water Mains and Their Appurtenances" (ANSI/AWWA C600) and the manufacturer's recommendations, and as provided herein:

1. All DIP will be polyethylene encased in accordance with these Public Facilities Improvement Standards and the standard for "Polyethylene Encasement for Ductile-Iron Piping for Water and Other Liquids" (ANSI/AWWA C105/A21.5). Polyethylene encased pipe will be bedded and backfilled with Type A material 12-inches above the crown of pipe.

2. At the direction of the City, the Contractor will repair damages to the polyethylene encasement as described within ANSI/AWWA C105/A21.5 or will replace all damaged polyethylene film sections.

3. DIP cuts will be coated with an acceptable bituminous material.

L. **Transitions -** Transitions between DIP and PVC will be made by using a PVC pipe spigot inserted into a DIP bell by cutting off the PVC bevel on the spigot, and leaving no more than a 1/2-inch taper, or by using a DIP repair sleeve.

M. **Borings** - The equipment, method and sequence of operation and conductor pipe grades will be approved by City Engineer.

1. A minimum of 48-hours' notice will be given prior to the start of work, without exception.

2. Excavation for the boring operation will be the minimum necessary to satisfactorily complete the work. Bracing and shoring will be adequate to protect workers and any adjacent structure or roadbed.

3. The conductor will closely follow the boring operation. The bored hole will not be more than 0.10-foot larger in diameter than the outside diameter of the conductor. Guide rails will be accurately set to line and grade to ensure installation of the conductor within allowable limits. The conductor diameter will be sufficient to allow adjustment of line and grade of the conducted pipe to meet allowable tolerances and to allow sand to be placed between the conductor and the conducted pipe.

4. Conducted pipe will be supported by a minimum of three sets of synthetic skids per stick of pipe, or as required by City Engineer. Pipe sections will be joined outside of the conductor. The skids and casing entrance will be lubricated prior to sliding the conducted pipe into place. The height of the skids may be adjusted to meet specified grades.

5. The space between the conducted pipe and conductor will be completely filled with clean, dry silica sand, blown into place. The method of placing sand in the void will be approved by City Engineer. Both ends of the casing will be plugged with non-shrink grout a minimum of 12-inches into the casing.

6. Whenever, in the opinion of the Developer's design or geotechnical engineer, the nature of the soil indicates the likelihood of ground loss which would result in a greater space between the outer surface of the conductor than allowed, the Contractor will take immediate steps to prevent such occurrences by installing a jacking head extending at least 18-inches from the leading edge of the conductor.

The jacking head will cover the upper two-thirds of the conductor and project not more than 1/2-inch beyond the conductor outer surface. Excavation will not be made in advance of the jacking head. Voids greater than allowable will be filled with sand, soil cement, grout, or as approved by City Engineer. Where voids are suspected, the design or geotechnical engineer may direct the contractor to drill the conductor, to pressure inject grout to refusal and repair the drilled hole. Grouting pressure will not exceed 50- pounds per square inch at the nozzle.

4-6 **SERVICE INSTALLATION** – Water services will be installed in accordance with manufacturer's recommendations, the Improvement Standard Details and with these provisions:

A. Service Runs – Services will be continuous from the main line to the service box. Bends in copper tubing will be made in a manner that does not crimp or flatten the tubing.

B. Saddles - Taps, service saddles, tees, joints, and fittings attached to mains will be separated by a minimum of 24-inches. Service saddles will be wrapped in 8-mil minimum thickness polyethylene and backfilled with Type "A" backfill, or other approved material by the City Engineer. Service saddles will be installed with zinc caps on all bolts, per Standard Detail W-3.

C. Service Manifolds – Service manifolds will be constructed per the following criteria:

1. Where a service line to a manifold is extended a distance greater than 18-feet, a construction jumper will be installed per Standard Detail W-19 of the City of Lincoln Standards. The new service line and manifold will be tested in accordance with Section 4-12 of these Improvement Standards.

Where a service line is extended a distance less than 18-feet, the extension will be cleaned, swabbed with chlorine and flushed per the latest edition of AWWA C651 in the presence of the City Engineer. The new service line and manifold will be pressure tested in accordance with Section 4-12 of these Improvement Standards.

In both cases, the installation will be fully restrained by an approved restraint system, starting at the main and as required by the approved project improvement plans.

2. Services outside of paved sections will be ductile iron.

3. No water will be drawn through a service prior to installation of the water meter and testing of the backflow assembly. 72-hour notification will be made to the City Engineer prior to testing of the backflow assembly without exception.

D. **Telemetering –** Telemetering conduit will be installed in accordance with these Improvement Standards, the Uniform Electric Code and as required by the Director of Public Works/City Engineer.

E. **Backflow Assembly** - A backflow assembly will be required for construction and sales trailers having a landscape irrigation system or a septic holding tank. Backflow assemblies will be covered with a freeze protection insulated bag per these Improvement Standards.

F. **Curb Marking** - The curb in front of residential water services will be stamped with a 'W' (2-inch in size).

G. **Double Meter Service** - Double meter service will be installed with 1 1/2-inch run as shown on detail W-4A and the approved plans.

4-7 **SERVICE ABANDONMENT** – All water services requiring abandonment will be disconnected from the main line by closing the corporation stop and placing a concrete cap over the corporation stop unless otherwise approved by the City. In some cases, as directed by the City Engineer, service saddles will be removed and the main repaired with a repair band.

4-8 **MAINLINE ABANDONMENT** – Main lines to be abandoned will be removed or filled with concrete slurry.

4-9 **APPURTENANCES INSTALLATION** – All appurtenances, including fire protection, blow-offs, sample stations, air release valves, backflow/cross connection devices, and fire hydrants will be installed in accordance with manufacturer's recommendations, these Improvement Standards and these provisions:

A. **Pipe Protection** – All valves, fittings, DIP, copper and underground brass will be wrapped in an 8-mil minimum thickness polyethylene encasement. Damaged or scratched surfaces on fusion bonded epoxy coated valves and appurtenances will be repaired with an epoxy kit per manufacturer's recommendations and to the satisfaction of the inspector prior to wrapping, without exception. Nuts and threads on valves will face away from concrete thrust blocks.

B. **Gate Valves** - Gate valves will be centered in a one-piece riser stock. On valves where the operating nut exceeds 36-inches in depth from final grade,

an operator nut extension 24 inches minimum in length will be installed.. (See Standard Detail W-9).

C. **Bolt and Nut Protection** -"Sap Seal" caps will be placed on all buried nuts and bolts. Longer bolts (5-inches minimum) may be required to accommodate the caps. In situations where a longer bolt cannot be installed due to the configuration of the appurtenance, and with the City Engineer approval, the bolt will be coated with an "anti-seize" product prior to installation. After the nut has been tightened into place, the nut and bolt will be completely coated with an acceptable bituminous coating. Additionally, where sap seal caps cannot be used, all buried nuts and bolts will be coated with a bituminous coating. This includes exposed bolts found on a manufactured appurtenance (i.e., valve bonnets, etc.)

D. **Pressure Reducing Station** - The station will be readily accessible by maintenance vehicles during all weather conditions. Valves will be fusion bonded epoxy coated per AWWA C116 and bolts will be grade 316 stainless steel.

E. **Fire Hydrant Bolts** - Break away bolts will be used in connecting the fire hydrant to the hydrant bury. Bolts will be installed nut side up with the bolts filled and covered with silicone caulking. Clearance will be made for removal of all bolts.

F. **Marking Fire Hydrants** - Fire hydrants will be marked with a blue reflector placed 1-foot off of street centerline on the fire hydrant side of the street. Fire hydrants located at intersections will be marked on both streets.

G. **Fire Hydrant Paint** - Fire hydrants will be painted with two coats safety yellow. Paint will not cover any of the threads on the outlet. When used as blow-offs the top 2-inches will be painted white and marked with an "X" with black enamel paint. Private hydrants will be painted white.

H. **Dead Lines** - Dead end lines, permanent and temporary, will have a blow off constructed per Standard Detail W-7 and W-7A.

I. **Insulation** - Insulating kits will be installed at transitions between ferrous and nonferrous metals per these Improvement Standards.

4-10 **CONCRETE CRADLES, ARCHES & ENCASEMENTS** – Concrete cradles, arches and encasements will conform to Standard Detail SS-9, and these conditions:

A. The pipe will be placed in proper position on temporary supports consisting of concrete block or bricks. When necessary, the pipe will be rigidly anchored or weighted to prevent flotation when the concrete is placed.

B. Concrete for cradles, arches or encasements will be placed uniformly along the pipe. Concrete placed beneath the pipe will be sufficiently workable to fill the voids without excessive vibration. The concrete will be allowed to cure and remain undisturbed for a minimum of 24-hours prior to backfill and compaction of the trench.

C. Water will not be permitted to enter, seep or run onto the concrete while curing.

4-11 **PIPE BACKFILL QA/QC** – Pipe zone backfill will conform to Standard Details W-1 and W-2 and these Improvement standards. Construction quality assurance and quality control (QA/QC) of all utility trench backfill will be performed by the owner's/developer's geotechnical engineering consultant. A performance based QA/QC specification will be developed and used for placement and compaction of all non-testable trench backfill materials. A design based QA/QC specification will be used for placement and compaction of all testable trench backfill material.

A. Performance Based QA/QC (Non-Testable Materials) - Non-testable trench backfill materials generally consist of locally derived mixtures of cobbles with a sandy matrix and/or breccia (volcanic rock) with a sandy matrix. These non-testable backfill materials should have a maximum particle size of 6-inches (greatest dimension). Use of non-testable trench backfill materials will be approved by the City on a case-by-case basis.

A performance-based specification criteria will be used to evaluate the suitability of placed and compacted non-testable trench backfill materials. The property owner's/developer's geotechnical engineering consultant must prepare a work plan that describes a proposed site-specific performance based specification for review and approval by the City prior to commencement of work. The work plan must include, but not be limited to:

1. Maximum loose lift (layer thickness) prior to compaction.

2. Moisture content range to be achieved prior to compaction

3. Specified compaction equipment to be used.

4. Minimum number of passes and coverage of specified compaction equipment.

B. **Design Based QA/QC (Testable Materials) -** Testable trench backfill materials generally consist of on-site native earth materials and imported earth materials that can be classified as soils according to the American Society for Testing and Materials (ASTM) Unified Soils Classification System guideline procedures (ASTM D2487 and D2488). These soil materials can be easily tested to determine if they meet the project design based QA/QC specifications for percent relative compaction by the following ASTM test methods:

ASTM D1556, Standard test method for in place density and unit weight of soil and soil-rock mixtures by the Sand-Cone Method

ASTM D2922, Standard test method for in place density and unit weight of soil and soil-rock mixtures by the Willow Depth Nuclear Method.

ASTM D3017, Standard test method for in place water content of soils and soil-rock mixtures by Willow Depth Nuclear Method.

C. **Trench Backfill Material -** The City requires designed based construction QA/QC testing and observation services to be performed by the owner's/developer's geotechnical engineering consultant to document that trench backfills meet or exceed the minimum material properties and minimum relative percent compaction requirements of the City specifications. Trench backfill material types, and relative percent compaction for water mains are presented below.

1. **Type "A" Material:** 3/8 inch minus imported screened sand with a minimum sand equivalent of 50 per CTM 217. All gradations are to be approved by the City prior to construction.

2. **Type "B" Material:** Class 2 Aggregate Base Rock per Caltrans Standard Specifications.

3. **Type "D" Material:** Crushed rock or soil-rock mixture (native) not to exceed 3 inches. Up to a 6 inch minus material may be used with special considerations and conditions approved by the City and Geotechnical Engineer. The material will be completely free of wood, roots, or other deleterious materials. Material not to be used within 24-inches of top of pipe without City Engineer's approval. Compaction will be by vibratory equipment or other approved devices. The City may require that the material be screened. A layer of geotextile fabric will be placed between the pipes and intermediate backfill zone. Material will only be used with geotechnical engineer's recommendation and with approval of the City Engineer.

D. **Pipe Zone Backfill -** Extreme care will be taken when consolidating the backfill around the pipe zone. For pipe 12-inches in diameter and smaller, no more than one-half of the pipe will be covered prior to shovel slicing (forcing rock backfill into the lower quadrants of the pipe). For pipe greater than 12-inches in diameter, no more than 6-inches will be covered prior to shovel slicing. Sufficient care will be taken to prevent movement of the pipe during shovel slicing. Shovel slicing will be witnessed by the City Engineer prior to shading the pipe. Proposed bedding, haunching and initial backfill (pipe backfill) materials will be approved by soils engineer and submitted to the Engineer with sieve analysis and sand equivalent test results. California Test Methods will include 216, 217, 301, and 302. Compaction equipment will not make direct contact with the pipe.

E. **Compaction Test Methods** - The percent relative compaction of all testable trench backfill soil will be determined by a combination of the following ASTM test methods:

ASTM D1557, Modified Proctor Compaction Curve.

ASTM D1556, In-place Soil Density by the Sand-Cone Method.

ASTM D2216, Soil Moisture Content By the Convection Oven Method.

ASTM D2922, In-place Soil Density by Nuclear Method.

ASTM D3017, In-place Soil Moisture Content by Nuclear Method.

ASTM D4643, Soil Moisture Content By The Microwave Oven Method.

ASTM D4959, Soil Moisture Content By The Direct Heating Method.

F. **Testing Frequencies** - All field testable trench backfill materials, that are classified according to the Unified Soils Classification System using ASTM D2487 and D2488 procedures as CL, ML, SC, SM, GC, GM, GP and GW by ASTM tests D422 (Particle Size Gradation) and D4318 (Atterberg Plasticity Indices), should be tested for percent relative compaction using a minimum frequency of one compaction test per maximum 12-inch-thick loose lift (layer) per 250-linear-feet of trench length or material change, whichever condition requires the greatest number of tests. Generally, minimum requirements include 12-inch loose lifts; moisture conditioned to at or above optimum moisture and compacted with 8 to 10 passes by a sheepsfoot wheel mounted on a Cat 225 or equivalent. In special circumstances the City may require other compaction equipment combined with thinner lifts.

All field testable trench backfill materials, that are classified according to the Unified Soils Classification System using ASTM D2487 and D2488

procedures as CL, CH, ML and MH by ASTM tests D422 (Particle Size Gradation) and D4318 (Atterberg Plasticity Indices), should be tested for percent relative compaction using a minimum frequency of one compaction test per maximum 12-inch-thick loose lift (layer) per 100-linear-feet of trench length or material change, which ever condition requires the greatest number of tests.

G. Marking - A 12-inch wide, blue plastic non-detectable water pipe marking tape, marked "Buried Water Main Below", will be placed in all mainline trenches, 18-inches deep within non-road areas and 24-inches deep within road areas per Standard Detail W-1. Where a water main and reclaimed water main intersect, the plastic marking tape will also be attached to the top of the pipe with nylon tie-wrap banded around the warning tape and the pipe every five feet on center. The warning tape will extend to the nearest valves located on each side of said intersection.

H. Marking in Unpaved Areas - Mains in unpaved areas will be marked every 150-lineal feet with a blue composite utility marker having a decal stating: "Caution Buried Water Pipeline". Appurtenances (valves, ARV's, test stations, etc.) and angle points will also be marked. Mains in landscaped areas will be delineated with a brass marker set in an 8-inch concrete cylinder. The brass marker will state “City of Lincoln Water Main”.

4-12 **TESTING PROCEDURES** – Testing of the water system may proceed only after joint utility crossings are completed, the sewer mains and laterals have passed pressure test and TV inspection, the reclaimed water system has passed testing and subgrade elevations have been met. Testing after all meter setters are in place may be subject to additional pressure tests at the discretion of the City Engineer. Water system will be re-tested after completion of any cement/lime/fly ash treated subgrade.

A. Pressure Test in accordance with AWWA standards (C605 for PVC, C600 for DIP) and the following:

1. Contractor will verify with the City Engineer that all system valves are open prior to testing.

2. The use of test plates will be approved by the City Engineer on a case-by-case basis.

3. The City Engineer will be present during the duration of the test.

4. Tests shall be performed only after the pipeline has been properly filled, flushed, and purged of air. No more than 0.5% of the line volume in additional water will be required to raise the test pressure from 0 to 150-psi.

5. The hydrostatic test pressure shall not be less than 150 psi or 1.5 the maximum anticipated sustained working pressure at the highest point along the test section unless the pressure exceeds the design pressure limit for any pipe, thrust restraint, valve, fitting, or other appurtenance of the test section, whichever is greater. In no case shall the test pressure exceed the design pressure limit for any pipe, thrust restraint, valve, fitting, or other appurtenance of the test section.

6. The test gauge will be liquid filled and capable of testing up to 300-psi.

7. No detectable leakage is allowed. Contractor will repair all leaks discovered during pressure test.

B. Chlorine Disinfection - Chlorine disinfection will comply with the latest edition of the American Water Works Association Standard for Disinfection Water Mains (C651) and these improvement standards:

1. Contractor will verify with the City Engineer that all system valves are open prior to testing.

2. A mandatory 72-hour notice is required prior to any disinfection procedures.

3. Chlorine tablets may not be placed in pipes. They will be retained in a device that prohibits their entry into the pipe.

4. Prior to chlorinating, pre-flush water mains and services

5. Chlorine will be drawn through all mains, hydrant runs and services. The City Engineer will verify that a minimum chlorine residual of 50-parts per million (ppm) has been achieved.

6. After a 24-hour holding period, the City Engineer will verify that a minimum chlorine content of 25-ppm remains in the system.

7. Upon approval by the City Engineer, the water system will be flushed to remove concentrated chlorine. Flushing will be continued until the remaining water has a chlorine residual below 1-ppm. Chlorinated water will be neutralized to less than or equal to 1-ppm chlorine residual **or** less than or equal to the public system chlorine content prior to discharge. Discharge location and neutralization methods will be coordinated with and approved by the City Engineer. A 72-hour notification to the City Engineer required prior to any discharge of chlorinated water.

8. At City Engineer's discretion, chlorinated water resulting from flushing newly installed water lines may be discharged into the City's sewer system. Permission to discharge chlorinated water into the sewer system will be granted by the City Engineer, on a case-by-case basis.

   Prior to discharging into the sewer system, the Contractor will sign a form authorizing DPW to bill for the amount of water discharged into the system. At the end of each flushing exercise, and prior to tying into the City water system, the City Engineer will prepare a bill for water usage based on the meter reading. This bill must be paid before the project is signed off by the City.

   Chlorinated water will not be disposed of into environmentally sensitive areas (i.e., under oak trees, vernal pools, manmade or natural streams, drainage systems, etc.). No water may be disposed of under oak trees during any time of the year.

   a. Water used for the purpose of flushing will be metered.

   b. Discharge into the sewer system will be done in such a manner as to avoid surcharging the sewer system.

   c. No discharge into the sewer system will be permitted on rainy days.

   d. No discharge will be permitted upstream of a small lift station.

   e. An approved air gap will be maintained at all times. Air gap distances will be calculated as 2.5 times the pipe diameter. In no case will the air gap be less than 1-inch.

C. **Water Quality Testing** - Chlorine disinfection will comply with the American Water Works Association Standard for Disinfection Water Mains (C651-92) and these improvement standards:

   Contractor is responsible for coordination of testing which will be performed by a City approved lab. Samples will be taken at locations approved by the City. Prior to collecting water quality samples and following chlorine disinfection, the water system will be held at City line pressure for a minimum of 48-hours. The City Engineer must be notified at least 72-hours in advance of testing, without exception. Water may not be drawn during this time period. After the 48-hour holding period has elapsed, water quality samples will be collected by the approved lab. The laboratory will complete total coliform and total plate count tests. The Contractor shall allow a minimum of 24 hours for the City Engineer/DPW to review and approve the laboratory test results. Actions allowed based on test results are:

BACTERIOLOGICAL TEST		
Coliform Present?	**Plate Count Results**	**Action Required**
No	Less than 1,000	Connect to City System
No	Greater than 1,000, but less than 1,250	Flush water system and re-test
Yes	Greater than 1,250	Flush and re-chlorinate water system and re-test

D. **Tying into the City System –** The water system may be tied into the City system upon completing and passing all the testing procedures. Tie-ins will be conducted as specified in Section 4-2 of these Improvement Standards. After the tie-in has been made, the Contractor will flush the segment tied-in, to the approval of the City Engineer.

E. **Continuity Testing –** Contractor will test continuity of the tracing wire with standard locating equipment in the presence of the City Engineer or his/her designated representative. Discontinuity in the tracing wire will be repaired. It is recommended that the Contractor perform continuity testing after subgrade is made, but before asphalt is placed. Final continuity testing will take place after asphalt is placed and all valve boxes are raised.

4-13 **REPAIRING INSTALLED IMPROVEMENTS** – All PVC and DIP water mains will be repaired by these procedures:

A. **Pipe Replacement** - Damaged or failed pipe sections will be removed and replaced with new pipe in the presence of the City Engineer. Replacement can be accomplished by the use of City approved ductile iron mechanical joint repair sleeves. Pipe restraints and thrust blocks will be required on all bends.

B. **Backfill** - After the repair has been completed, the excavation will be backfilled and compacted to grade as specified. The repairs will then be re-tested per these Improvement Standards.

C. **Pipe Protection** - At the direction of the City, the Contractor will repair damage to the polyethylene encasement as described within ANSI/AWWA C105/A21.5 or will replace all damaged polyethylene film sections.

4-14 **PUNCH LIST PROCESS** – When the Contractor has all improvements substantially completed, a punch list of final outstanding items may be requested.

4-15 **MATERIALS** – Materials to be used in domestic water systems will conform to these Improvement Standards:

A. **Approved Equal** - The words "approved equal" will mean any material deemed by the City to be acceptable for use within the City's water system as compared to products of specified manufacturers. Specifications for all

materials (submittals) to be used on the project will be submitted to the City prior to start of construction. The submittal will include a letter with:

1. **Product** - A description of the product and the appropriate materials specification section number, including description of use.

2. **Contact** - The name and telephone number of the contact person for the proposed product.

3. **Reference** - A list of other agencies that are using the proposed product (including names and telephone numbers).

Address the letter to the City of Lincoln Engineering Department, 600 Sixth Street, Lincoln, CA 95648 ATTN: City Engineer. City staff may request a sample of the product for review.

B. **Unapproved Materials** - Materials not approved for use on the project will be removed from the site within 24-hours if requested by the City Engineer.

C. **Water Main** - Unless noted on the approved plans, all water mains will be either Polyvinyl Chloride Pressure Pipe (PVC) or Ductile Iron Pipe (DIP).

1. **PVC Pressure Pipe** - PVC Pressure Pipe will be manufactured to a minimum Class 200 DR14 rating and will conform to the "Standard for Polyvinyl Chloride (PVC) Pressure Pipe, 6-inches through 12 inches, for Water" (AWWA C900), and ASTM D 1784 will also include:

   a. PVC Pressure Pipe will be blue or white in color and will have been manufactured within 18-months of installation. The pipe will be manufacturer date coded and the City provided the manufacturer's coding for translation. Sun damaged pipe may be rejected at the City Engineer's discretion.

   b. Rubber rings will conform to the "Standard Specifications for Elastomeric Seals (Gaskets) for Joining Plastic Pipe" (ASTM F477).

   c. Approved PVC Pressure Pipe manufacturers include: Certa Lok, Diamond Plastics Corporation, JM Eagle, Vinyl Tech, or approved equals. (All pipe will be made in USA).

2. **Ductile Iron Pipe** - DIP will be Class 350 and manufactured to conform to the standards ANSI/AWWA C150/21.50 thickness design of ductile-iron pipe and to "Ductile Iron Pipe Centrifugal Cast in Metal Molds or Sand-Lined Molds for Water and Other Liquids" (ANSI/AWWA C151/A21.51) and will be made in USA and will also include:

a. DIP will be cement mortar lined in accordance with the standard for "Cement Mortar Lining for Ductile Iron Pipe and Fittings for Water" (ANSI/AWWA C-104/A21.4).

b. Approved DIP manufacturers include: Pacific States, Tyler, US Pipe, or approved equals. (All pipe will be made in USA)

D. Services

1. **Copper Tubing** - Copper tubing will be seamless, annealed copper tube and will conform to ASTM B88 "Standard Specification for Seamless Copper Water Tube" and will be Type K. Copper will be grade UNS-C122200. For 1-inch diameter, use Type K Rolled Soft Copper. For diameters ranging from 1.25-inch to 2-inch, use Type K Soft 20-foot Sticks. Approved tubing includes: Cambridge-Lee, Mueller Streamline, or approved equal.

2. **Brass Material**

   a. Brass pipe – Brass pipe will conform to ASTM B43 standards. A list of approved pipes includes: Cambridge-Lee, Federal WW-351, or approved equal.

   b. Brass Fittings – Brass fittings will conform to ANSI Standard B16.15, B16.24, B2.1, T-94-1 and be a minimum of Class 125. A listing of approved manufacturers includes: Lee Brass, Merritt Brass, or approved equal.

   c. Brass fittings for Copper Tubing – An approved listing for brass fittings for copper tube includes: Jones, Mueller, or approved equal. Parts reference numbers are shown below (See Standard Detail W-4):

   1. Jones (1-inch through 2-inch):

Jones Super Grip CTS X CTS	E-2609SG
Jones Super Grip CTS X MIP	E-2605SG
Jones Super Grip CTS C FIP	E-2607SG
Comp. x Comp. (2" only)	E-2609SG

   2. Mueller (1-inch through 2-inch):

H-15403N	CTS x CTS
H-15451N	CTS x FIP
H-15428N	CTS x MIP

3. **Corporation Stops**

a. Corporation stops will be male, iron pipe thread by compression, insulated and full throat ball valve design. A corporation stop will be installed at the water main for all services laterals two inches and smaller. Approved manufacturers of corporation stops include: Mueller, Jones, or approved equal. Part reference numbers are as shown below: (Refer to Standard Detail W-3)

1. Mueller: Part #B-25008N (CC X CTS)
Part #B-25028N (IP X CTS)
Part #B-35028N (MIP X CTS)

2. Jones: Part #E1991 (MIPXCTS SG)
Part #E1993 (MIPxFIP)
Part #E1935SG (MIP X 110CTS)
Part #E1937SG

3. Ford: Part #FB 1700 (for ARV's and Blowoffs)

4. Curb Stops

a. Approved curb stop manufacturers include: Jones, Mueller, or approved equal. Part reference numbers are shown below: (refer to Standard Detail W-4)

1. Jones: Part #E1921WSG (110 CTS X FIP w/ lockwing)
2. Mueller: Part #B-25166N (Flared X FIP w/ lockwing)

5. Dielectric Tape – Approved manufacturers for dielectric tape include Polyken #932 Hi-Tack joint wrap tape or approved equivalent flexible dielectric tape.

6. Service Saddles

a. PVC Pressure Pipe Service Saddles manufacturers include: Jones, Mueller, or approved equal. Part reference numbers as indicated below:

1. Jones: 4-inch through 12-inch saddles with 1-inch to 2-inch taps, Part #J-996

2. Mueller:

Saddle Size	Part #
4-inch	H13490
6-inch	H13491
8-inch	H13492
10-inch	H13493

12-inch	H13494

b. DIP Service Saddle manufacturers include: Jones, Mueller, or approved equal. Part reference numbers are as indicated below:

1. Jones (4-inch through 12-inch saddles with 1-inch to 2-inch taps): Part #J-979

2. Mueller 1-inch through 2-inch taps:

Saddle Size	Part #
4-inch	BR2B0474IP_ _ _*
6-inch	BR2B0684IP_ _ _*
8-inch	BR2B0899IP_ _ _*
10-inch	BR2B1104IP_ _ _*
12-inch	BR2B1314IP_ _ _*

* The last three numbers denote tap sizes (0.75”=075, 1”=100, 1.50”=150, 2”=200)

E. Appurtenances

1. Air Release Valves – Air release valves will be fusion bonded epoxy coated (per AWWA C116), vacuum break type. A listing of approved manufacturers includes Crispin, Val-Matic, or approved equal. Part reference numbers are as shown below:

Crispin	Part #	Val-Matic	Part #
1-inch	UL10	1-inch	201C-M
2-inch	UL20	2-inch	201C-M
3-inch	UL31	3-inch	201C-M
4-inch	UL41	4-inch	201C-M
6-inch	UL61	6-inch	206C-M
8-inch	UL81	8-inch	206C-M

2. Backflow Assembly – A listing of approved manufacturers and products include:

Watts:
909 and 009 Series, 1-inch to 10-inch
709 DCDA Series, 3-inch to 10-inch
909 RPDA Series, 3-inch to 10-inch

Wilkins:
975 Series, 1-inch to 2-inch only

Ames:
4000 B Series, 1-inch to 2-inch

3. **Blocking for Boxes Assembly** – A listing of approved materials includes: Concrete Stone 9-inch x 1-inch x 16-inch, Slump Block 3-inch x 3-inch x 16-inches, standard concrete brick, or approved equal.

4. **Blow Off** – Approved manufacturers and products include: Kupferle, Eclipse #78 (2-inch) or approved equal.

5. **Fittings**

   a. **Fittings for PVC Pipe** – Unless otherwise specified or shown on the approved plans, all fittings to be used with PVC Pressure Pipe will conform to the standard for "Ductile Iron Compact Fittings for Water and Other liquids" (ANSI/AWWA C153/A21.53). Approved fitting manufacturers include Tyler and US Pipe (all fittings will be USA made).

      1. All ductile iron fittings will be coated with an 8 mil nominal thickness fusion bonded epoxy conforming to the requirements of ANSI/AWWA C550 and C116/A21.16.

      2. All fittings will be wrapped in accordance with these Improvement Standards.

      3. The Contractor may use a ductile iron mechanical joint flange adapter designed for AWWA C900 pipe with connecting PVC Pressure Pipe to flanged fittings or flanged valves. Pipe ends must be cut smooth and square with no bevel. The joint will be restrained to the PVC pipe using an approved restraint method, such as the Romac 600 Series Pipe Restraining System.

   b. **Fittings for Ductile Iron Pipe** – Unless otherwise specified or shown on the approved plans, all fittings to be used with DIP will employ either mechanical joints or restrained joints conforming to the standard for "Ductile-Iron Compact Fittings for Water and Other Liquids" (ANSI/AWWA C153/A21.53 and AWWA C110). Approved fitting manufacturers include Tyler and US Pipe. (all fittings to be made in USA)

      1. All ductile iron fittings will be coated with an 8 mil nominal thickness fusion bonded epoxy conforming to the requirements of ANSI/AWWA C550 and C116/A21.16

      2. All fittings will be wrapped in accordance with these Improvement Standards.

6. **Freeze Protection for Backflow Assemblies** – Backflow assembly freeze protection materials will be comprised of the following:

   a. Laminated fabric conforming to Herculite #10 by Herculite Products (fabric will be a minimum of 10.6 oz/sq. yd.), or approved equal.

   b. Brass Rolled Rim Grommet and spur washer by Astrup, or approved equal.

   c. Polyester thread with a minimum strength of 14.2-pounds, Coats American's Star Ultra product line, or approved equal.

   d. Fiberglass insulation R-19 rated, 6-inch minimum thickness

   e. Two-inch minimum width Velcro, or approved equal.

   f. Nylon zip ties.

7. **Gaskets** – Gaskets will conform to the following specifications:

   a. Flange Gaskets - Flange gaskets will be neoprene rubber, red rubber, US Pipe Flange-Tyte, or approved equal.

   b. Push On Gaskets – Per manufacturers specifications and City approval.

   c. MJ Gaskets – Per manufacturers specifications and City approval

   d. Insulating Flange Gaskets – Insulating flange gaskets will be USSO Standard B.16.21 insulation flange kits, Type E Full Face Gasket with two side insulation as manufactured by Calpico, or approved equal.

8. **Hydrants** – Hydrants will be wet barrel type bronze. Exterior will be painted with one coat of primer and two coats “safety yellow” paint. Approved hydrants include: Clow BR2 #2060 Jones J3762. All caps will cover the threads. See Standards Detail W-11.

9. **Hydrant Bury** – Hydrant buries will be ductile iron mechanical jointed cross flange, fusion bonded epoxy coated per AWWA C116. A list of approved hydrant buries include: South Bay Foundry or Clow MJ X Size, or approved equal.

10. **Hydrant Bury Extensions** – Hydrant bury extensions will be grooved fusion bonded epoxy coated (8-mil) per AWWA C116. A list of approved hydrant bury extensions include: Clow Part # CW-EXT-BO (6-inch x 6-

inch through 6-inch x 36-inch), Tyler (6-inch x 6-inch through 6-inch x 33-inch), or approved equal.

11. **Hydrant Check Valves –** A listing of approved hydrant check valves includes: Jones J5000S, or approved equal. Contact the City Engineer for pressure zone information. Depending on locations, hydrant check valves may not be required, please refer to City Engineer.

12. **Location Stakes –** A list of approved off-site location stakes include: Carsonite CRM3 072 08 with anchor barb kit or approved equal with caution stickers attached (112CW-A or approved equal) and organization identification decal stating: CITY OF LINCOLN – CALL BEFORE DIGGING (916) 434-2450.

13. **Mainline Valve Lock-Out –** A list of approved manufacturers and part reference numbers include: SW Services PC800, DC600, or approved equal.

14. **Manhole Frame and Cover –** A listing of approved manufacturer and part reference number includes: South Bay Foundry (SBF-1920 RV-W), or approved equal.

15. **Meters –** All meters are to be purchased by the Builder/Developer from the City and installed by the City Public Services at (916) 434-2450. Meters to be auto read with touch pad. Meters to be Census Technology SR II.

16. **Meter Idlers –** A listing of approved meter idler manufacturers include: Ford or approved equal. Part reference numbers are shown below:

Ford	Part #
1-inch	IDLER-4P
1.5-inch	IDLER-6-NL

17. **Meter Setters** – A listing of approved meter setter manufacturers include: Mueller or approved equal. Part reference numbers are shown below:

Mueller	Part #
1-inch	B-24118-2
1.5-inch to 2-inch	B-2423-99000

18. **Meter Spud Couplers** – A listing of approved meter spud couplers manufacturers include: Ford, Jones, Mueller, or approved equal. Part reference numbers are shown below:

Ford	Part #	Mueller	Part #
1.5-inch to 2-inch	CF31-XX-NL	1-inch	H-10890N

19. **Nuts and Bolts**

    a. **Flange Bolts and Nuts -** Flange bolts and nuts-flange bolts and nuts shall conform to a minimum ASTM#A307 or as approved by City Engineer. Bolts less than ¾-inches in diameter shall be a minimum Grade B (heavy hex) or as approved by City Engineer. Bolts ¾-inches and larger in diameter shall be a minimum Grade A (standard hex) or as approved by City Engineer.

    b. **Hydrant Bolts -** Hydrant bolts to be Hollow Break Away, 5/8-inch x 3.5-inch, conforming to ASTM-A307 Grade A & B Low Carbon Steel.

    c. **Meter Bolts -** Meter bolts are to be stainless steel, Grade 316 with brass nuts.

    d. **Tee Bolts -** Steel bolts are to be 3/4-inch high strength, low alloy steel with a heavy nut, conforming to AWWA Standard C111-90.

20. **Nylon Bushings –** Nylon Bushings will be 76-76R, 2 1/2 –inch NST x 2-inch pipe.

21. **Patching Material –** A listing of approved manufacturers and part reference numbers for patching DIP include: Cop-Coat Carboline Company (Bitumastic No. 50, Coal Tar), or approved equal.

22. **Polyethylene Encasement –** Polyethylene film for encasement will have a minimum thickness of 8 mils. The minus tolerance on thickness will not exceed ten percent of the nominal thickness. The encasement of pipe with polyethylene will be in either type 1 or sheet form.

    Polyethylene film will be manufactured from a Type 1, Class C raw polyethylene material conforming to "Polyethylene Encasement for Ductile-Iron Piping for Water and Other Liquids" (ANSI/AWWA C105/A21.5). Approved manufacturers include: Fee Spec's-LP378D Northtown, Fulton Enterprise Inc., Global Polymer Tech, Unisource, or approved equal.

23. **Pressure Regulators –** A listing of approved all brass pressure regulator systems include: Watts (1-inch through 2-inch, UB5-series), Wilkens (1-inch through 2-inch 600 series and 2.5-inch through 3-inch 5YSBR), or approved equal.

24. **Restraints**

   a. PVC - Approved restraint systems for PVC Pressure Pipe include: Certain Teed Certa Lok (for straight runs only), EBAA Iron 2000PV, Romac Grip Rings, or approved equal.

      DIP - Approved restraint systems for DIP include: Field Lok Gaskets by US Pipe (3-inches through 24-inches diameter only), Mega Lug 1100 Series, TR Flex or approved equal.

25. **Riser Stock –** Riser stock will be 6-inch or 4-inch diameter Schedule 40 PVC inside meter boxes. Riser stock will be 8-inch diameter PVC C900 for all main line valves.

26. **Sampling Stations –** Sampling stations will be purchased by the contractor through their supplier. A list of approved sampling stations includes: Placer Waterworks 30" Water Sampling Station, Water Plus Corporation Model 301-W Stainless Steel Sampling Station**,** or approved equal.

27. **Sap Seal –** A listing of approved products include Sap Seal Products-Heavy Hex With Grease, or approved equal.

28. **Service Boxes and Lids –** All box lids are to be permanently marked with the appropriate label (i.e, Water, ARV, Blow-off, CPT, etc.) and "COL". A list of approved box manufacturers include: Christy or approved equal. Part reference numbers are shown below: (Traffic lids to be approved by City)

Size	Christy Park Number
1-in	Box-B30, FL30, Cover-FL-30-T
1-inch (double service)	Box-B30, FL30, Cover-FL-30-T (2EA)
1 1/2-in to 2-in	Box-B40, Cover-B40-61J, Cover-B40T
3-in to 4-in	Box-B48, Cover-B48-62J, Cover-B48T2
6-in to 10-in	Box-B48, R-17924 PIT, Cover-R-17-52H
Note: 1. All covers will have a 1.75-inch probe hole offset at the upper 1/3 portion of the lid. 2. B40 box and larger to have 2-piece steel lid due to weight (non bolt down)	

29. **Silicone –** Silicone will be clear, 100% silicone with a 25 year life, or approved equal.

30. **Telemetering Conduit -** Telemetering conduit will be minimum 1/2-inch diameter Schedule 40 PVC or polyethylene ("Inter-Duct") pipe. Both will have a nylon pull string.

31. **Tracing Wire –** Tracing wire will be 10-gauge minimum UF rated solid copper with plastic insulation

32. **Tracing Wire Connectors –** Tracing wire connector will be split-bolt type connectors. A listing of approved products include: Permanent Seal-Wire Connectors – Part #97811 or approved equal.

33. **Tracing Wire Mastic Tape Seal –** Tracing wire mastic tape will be 3M Mastic Tape #2229 or approved equal.

34. **Valves**
    a. **Butterfly Valves –** Butterfly valves to be used on diameters ranging from 16-inch to 72-inch. A list of approved valves include: Pratt Ground Hog (Holiday free epoxy coated), Mueller Lineseal III (Holiday free epoxy coated), or approved equal. Certification will be provided by the valve manufacturer stating the epoxy lining is holiday free. (Made in USA)

    b. **Gate Valves –** Gate valves for 2-inch through 2-1/2-inch services will be NIBCO-113 Bronze or approved equal. Gate valves to be used on diameters ranging from 3-inch to 12-inch and will be resilient seat or wedge type and meet C509 Class C Specifications. A list of approved valves includes: M & H 4067 RW Gate Valve, Mueller-A-2361 RS Gate Valve, US Pipe Metro Seal 250, or approved equal. (Made in USA)

    c. Two part epoxy repair kit will be provided by valve manufacturer.

35. **Valve Boxes –** All valve boxes in street and other traffic areas will be designed to H-22 loading conditions. A list of approved manufacturers and part reference numbers include: Christy Type G5, Christy Type B17 by 30, BES Type G5, or approved equal.

36. **Water Pipe Marking Tape** – 12” wide non-detectable warning tape. Approved manufacturers and materials include: Northtown Company, Christy, or approved equal.

37. **Zinc Caps** – A listing of approved manufacturers include: Mars, or approved equal. Part reference numbers are shown below.

    Mars: 7/16-inch to 1/2-inch – 2.5 ounce weight
    5/8-inch to 1-inch – 6 ounce weight

DOMESTIC WATER DETAILS

Typical Water Trench Detail *W-1*
Water Service Trench Detail..... *W-2*
Service Saddle Connection Detail..... *W-3*
Residential 1" or 1-1/2" Service Line *W-4*
Double Meter Residential 1" x 1" 1 1/2" Service Line *W-4A*
Water Service Location *W-5*
Thrust Block Bearing Area *W-6*
Thrust Block and Anchor Details *W-6A*
2" Blow Off Valve..... *W-7*
4" Blow Off Valve..... *W-7A*
1" and 2" Air Release Valve *W-8*
4" Combination Air Release Valve And Vacuum..... *W-8A*
Gate and Butterfly Valve and Box *W-9*
Sampling Station With Pressure Recorder..... *W-10*
Water Sampler With Pressure Recorder *W-10A*
Fire Hydrant Installation *W-11*
Onsite Fire Protection and Backflow Assembly..... *W-12*
Water Service Cut Off Detail *W-12A*
Typical Fire Services *W-13*
Fire Services Installation *W-14*
Commercial ¾" & 1" Service Line..... *W-15*
Commercial 1 ½" & 2" Service Line..... *W-16*
Commercial 3" and Larger Service..... *W-17*
Commercial 1 ½" & 2" Irrigation Service..... *W-18*
Construction Water Connection..... *W-19*
Meter Cover Water Service *W-20*
Double Meter Cover Water Service..... *W-21*

[THIS PAGE INTENTIONALLY LEFT BLANK]

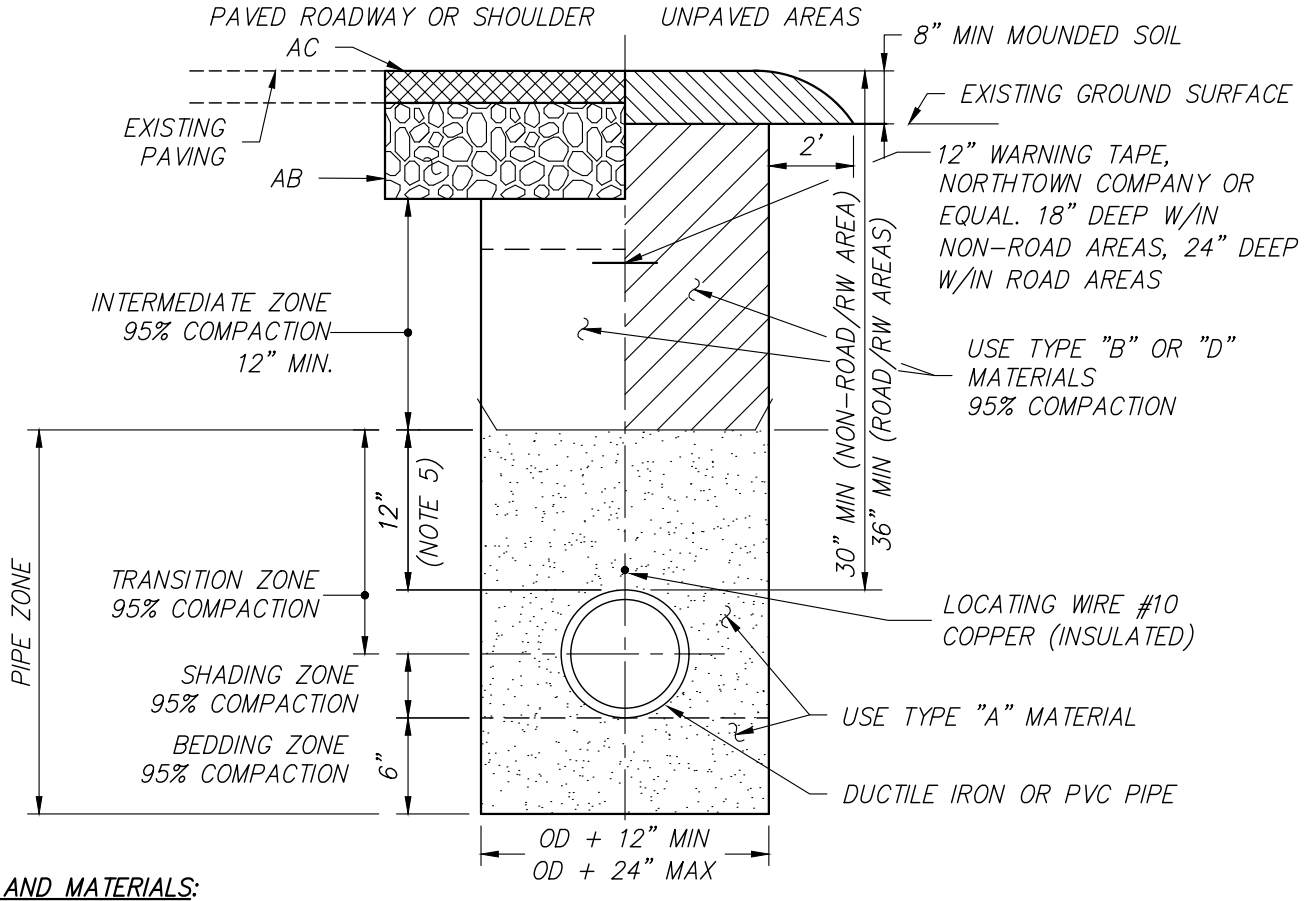

BEDDING AND MATERIALS:

TYPE "A" MATERIAL: 3/8" MINUS IMPORTED SCREENED SAND WITH MINIMUM SAND EQUIVALENT OF 50 PER CTM 217. ALL GRADATIONS TO BE APPROVED BY CITY PRIOR TO CONSTRUCTION.

TYPE "B" MATERIAL: CLASS 2 AGGREGATE BASE PER CALTRANS STANDARD SPECIFICATIONS.

TYPE "D" MATERIAL: CRUSHED ROCK OR SOIL-ROCK MIXTURE (NATIVE) NOT TO EXCEED 3". UP TO A 6" MINUS MATERIAL MAY BE USED WITH SPECIAL CONSIDERATIONS AND CONDITIONS APPROVED BY CITY AND GEOTECHNICAL ENGINEER. THE MATERIAL WILL BE COMPLETELY FREE OF WOOD, ROOTS OR OTHER DELETERIOUS MATERIAL. MATERIAL NOT BE USED WITHIN 24" OF TOP OF PIPE WITHOUT CITY ENGINEERS APPROVAL. COMPACTION WILL BE BY VIBRATORY EQUIPMENT OR OTHER APPROVED DEVICES. THE CITY MAY REQUIRE THAT THE MATERIAL BE SCREENED. A LAYER OF GEOTEXTILE FABRIC WILL BE PLACED BETWEEN THE PIPES AND INTERMEDIATE BACKFILL ZONE. MATERIAL WILL ONLY BE USED WITH GEOTECHNICAL ENGINEER'S RECOMMENDATION AND WITH APPROVAL OF THE CITY ENGINEER.

NOTES:

1. CREEK CROSSING OR SHALLOW TRENCH SHALL REQUIRE SPECIAL PIPE PER APPROVAL OF CITY ENGINEER.
2. BEDDING FOR OTHER APPROVED PIPE TO BE APPROVED BY CITY ENGINEER AND PER ASTM C12.
3. CITY WILL REQUIRE CUT-OFF WALLS AND TRENCHES TO CONTROL PERMEABILITY AND/OR REQUIRE GEOTEXTILE BARRIER WRAP FOR MATERIAL NOT MEETING A TYPE "A" OR "B" MATERIAL SPEC.
4. SHOVEL SLICING TO BE USED ALONG WITH MECHANICAL (VIBRATORY) AT 12" MAX LOOSE LIFTS.
5. TYPE "D" MATERIAL REQUIRES 24" INCHES BACKFILL ABOVE PIPE.
6. TYPE "D" MATERIAL MAY ONLY BE USED WITH CITY ENGINEER APPROVAL AND GEOTECHNICAL ENGINEER RECOMMENDATION.

CITY OF LINCOLN
ENGINEERING DEPARTMENT

TYPICAL WATER TRENCH DETAIL

REVISIONS:	DATES:	APPROVED:
		CITY ENGINEER DATE

SCALE: NONE
DATE: SEPTEMBER 2019
DRAWN BY: C.G.

W-1

NOTES:

1. DEPTH OF BEDDING TO VARY UPON EXISTING SOIL CONDITIONS PER APPROVAL OF CITY.
2. 12" MIN. IF TYPE "D" MATERIAL IS USED WITHIN INTERMEDIATE ZONE. TYPE "D" MATERIAL TO BE APPROVED BY SOILS ENGINEER AND CITY ENGINEER.

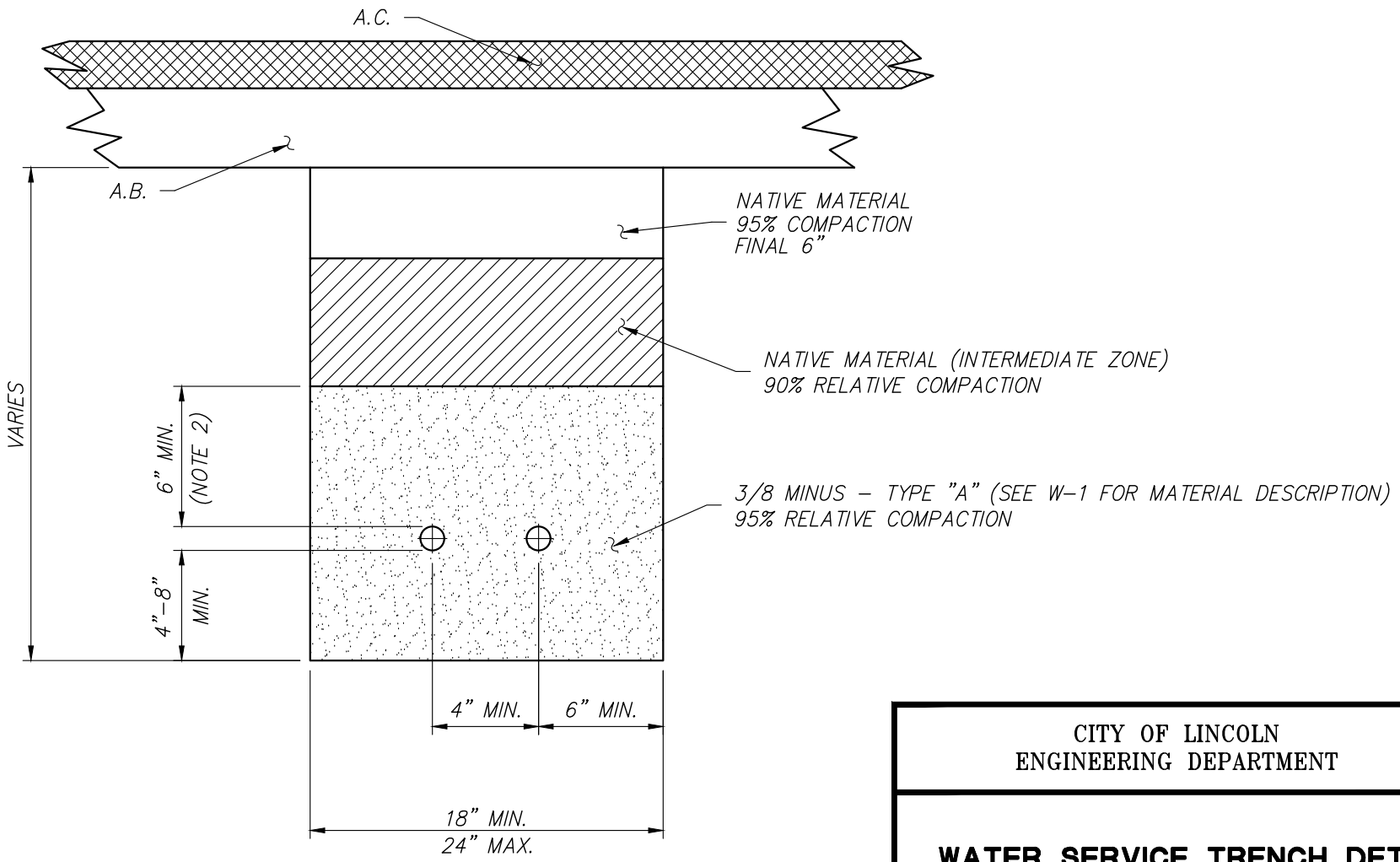

CITY OF LINCOLN
ENGINEERING DEPARTMENT

WATER SERVICE TRENCH DETAIL

REVISIONS:	DATES:	APPROVED:
		CITY ENGINEER DATE

SCALE: NONE
DATE: SEPTEMBER 2019
DRAWN BY: C.G.

W-2

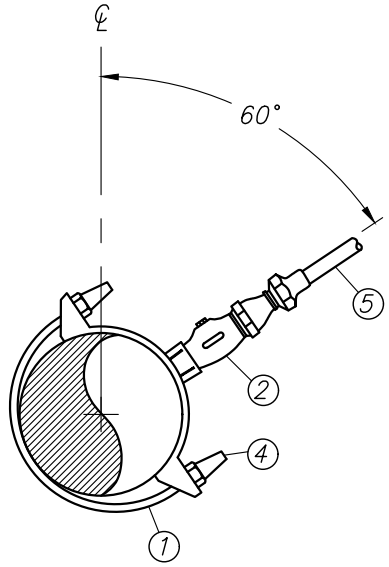

DOUBLE STRAP
DUCTILE IRON PIPE SADDLE

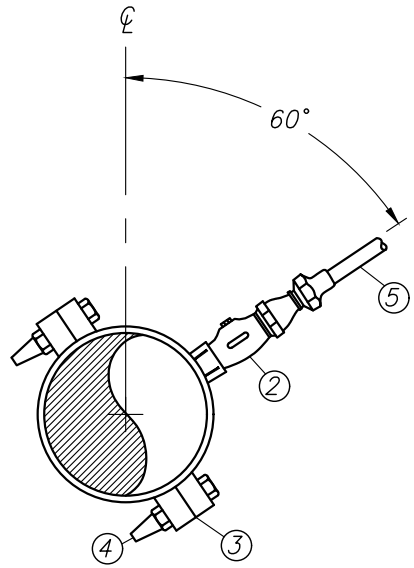

PVC PIPE SADDLE

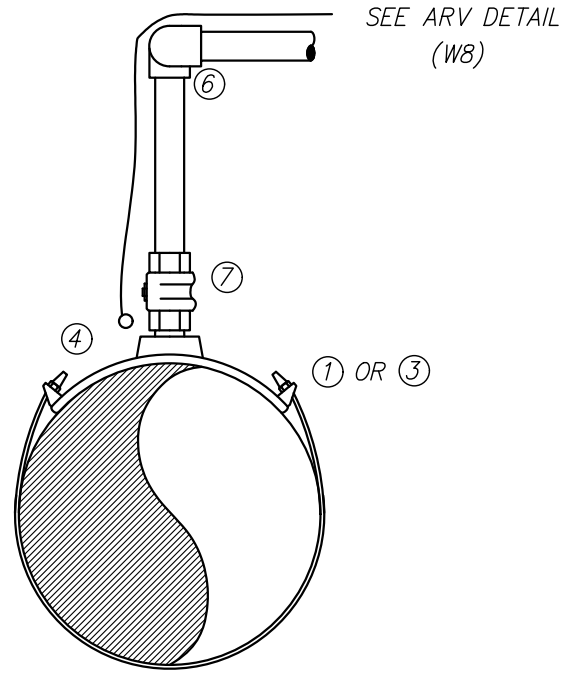

ARV AND BLOWOFF SADDLE

MATERIALS:

1. DOUBLE STRAP CC THREAD BRONZE SADDLE JONES #J-979, MUELLER BR2B OR EQUAL.
2. INSULATING CORPORATION STOP-MUELLER B-25008 INSULATED BALL CORP STOP OR EQUAL (INLET: CC THREAD AND OUTLET: COMPRESSION)
3. BRASS SADDLE FOR PVC MAIN - JONES #J-996 OR EQUAL CC THREAD
4. ZINC CAPS ON ALL BOLTS (ONLY WITH NON-INSULATED CORPORATION STOP)
5. COPPER SERVICE W/ POLYETHYLENE COATING
6. SWING JOINT (2 - 90 BRASS FITTINGS)
7. FORD FB 1700 OR EQUAL (CC x FIP CORP STOP)

NOTES:

1. WRAP CORPORATION STOP WITH AN APPROVED 8 MIL POLYETHYLENE. ALSO WRAP 3" MIN. OF DIELECTRIC TAPE FROM MAIN (PLOYKEN 932 OR EQUAL).
2. SADDLES SHALL BE WRAPPED IN 8 MIL POLYETHYLENE AND BACKFILLED WITH TYPE "A" BACKFILL.
3. TRACING WIRE SHALL BE REQUIRED ON ARV, HYDRANT RUNS, BLOW OFFS, ALL SERVICES, AND OTHER MAJOR APPURTENANCES.

CITY OF LINCOLN
ENGINEERING DEPARTMENT

SERVICE SADDLE CONNECTION DETAIL

REVISIONS:	DATES:	APPROVED:
		CITY ENGINEER DATE

SCALE: NONE
DATE: SEPTEMBER 2019
DRAWN BY: C.G.

W-3

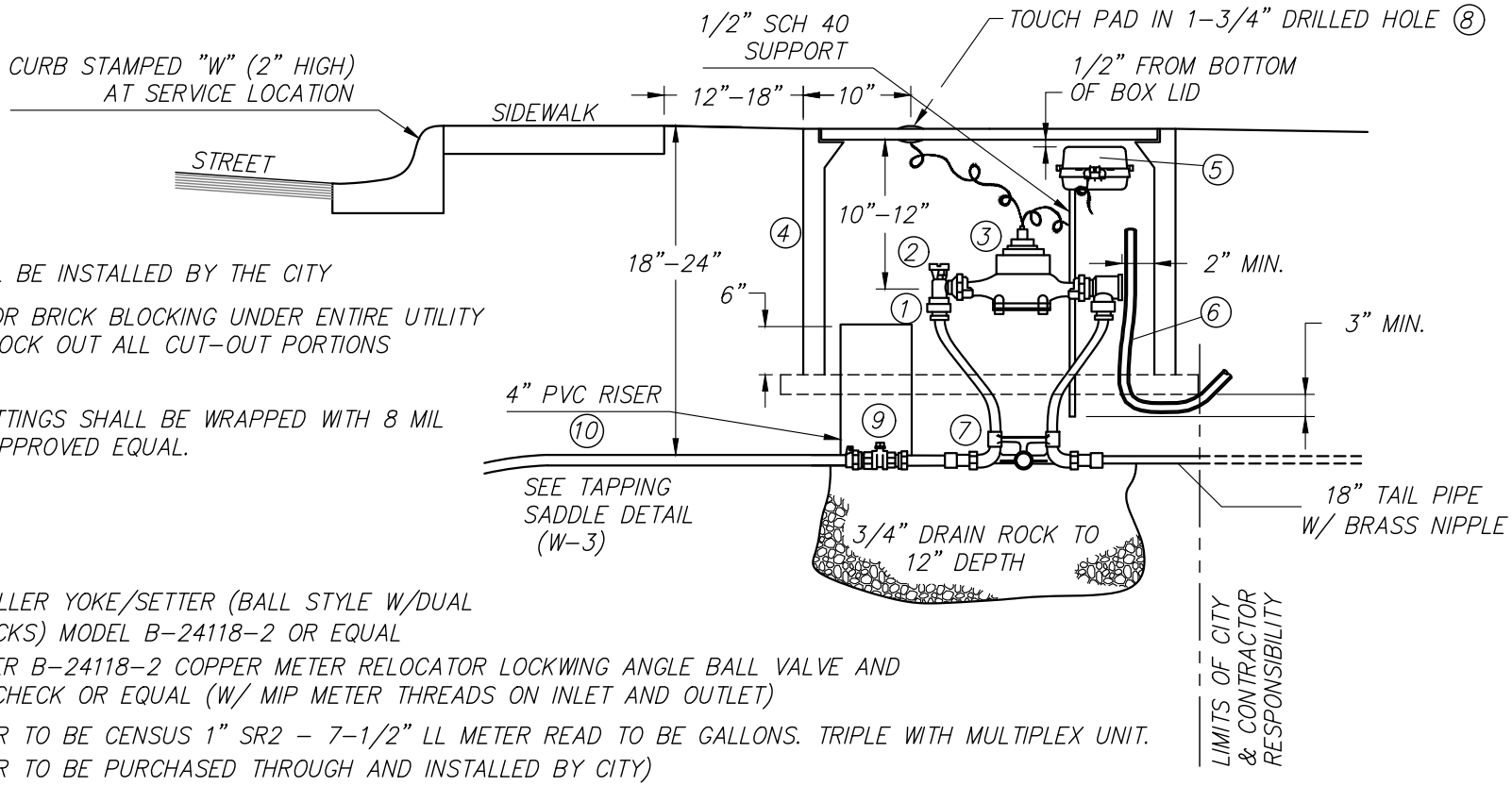

NOTES:

1. WATER METER SHALL BE INSTALLED BY THE CITY
2. INSTALL CONCRETE OR BRICK BLOCKING UNDER ENTIRE UTILITY BOX PERIMETER. BLOCK OUT ALL CUT–OUT PORTIONS OF THE METER BOX.
3. BURIED PIPE AND FITTINGS SHALL BE WRAPPED WITH 8 MIL POLYETHYLENE OR APPROVED EQUAL.

MATERIALS LIST:

(1) **METER SETTER** MUELLER YOKE/SETTER (BALL STYLE W/DUAL CHECKS) MODEL B–24118–2 OR EQUAL

(2) **ANGLE STOP** MUELLER B–24118–2 COPPER METER RELOCATOR LOCKWING ANGLE BALL VALVE AND DUAL CHECK OR EQUAL (W/ MIP METER THREADS ON INLET AND OUTLET)

(3) **WATER METER** METER TO BE CENSUS 1" SR2 – 7–1/2" LL METER READ TO BE GALLONS. TRIPLE WITH MULTIPLEX UNIT. METER TO BE PURCHASED THROUGH AND INSTALLED BY CITY)

(4) **METER BOX** CHRISTY MODEL B30 OR EQUAL (W/BOLT DOWN LIDS, READING LIDS, NO KNOCK OUTS) W/1–3/4" ROUND OPENING FOR (TOUCH PAD) IN COVER (CONTRACTOR RESPONSIBILITY)

(5) **REMOTE TRANSMITTER WITH SUPPORT** MXU AND TRPL TO BE PURCHASED THROUGH AND INSTALLED BY CITY

(6) **CONNECTION CONDUIT** 1/2" SCH 80 CONDUIT TO BE INSTALLED BY CONTRACTOR. TO CONNECT MULTIPLE METERS (SEE DETAIL W–5)

(7) **METER COUPLING** MUELLER H–10890 OR EQUAL (1" x 4" M.I.P. x SWIVEL NUT)

(8) **TOUCH PAD** PURCHASED BY DEVELOPER AND TO BE INSTALLED BY CITY

(9) **CURB STOP** MUELLER B–25166 BALL METER VALVE W/ LOCKWING OR EQUAL (INLET: COPPER FLARE AND OUTLET: F.I.P.) W/IN 4" PVC RISER

(10) **COPPER PIPE** TYPE K COPPER, ALL SERVICE TO 1" (FLARED FITTING)

CITY OF LINCOLN
ENGINEERING DEPARTMENT

RESIDENTIAL MIN 1" OR 1-1/2" SERVICE LINE

REVISIONS:	DATES:	APPROVED:
		CITY ENGINEER DATE

SCALE: NONE
DATE: SEPTEMBER 2019
DRAWN BY: C.G.

W-4

NOTES:

1. WATER METER SHALL BE INSTALLED BY THE CITY
2. INSTALL CONCRETE OR BRICK BLOCKING ENTIRE UTILITY BOX PERIMETER BLOCK OUT ALL CUT-OUT PORTIONS OF THE METER BOX.
3. BURIED PIPE AND FITTINGS SHALL BE WRAPPED WITH 8 MIL POLYETHYLENE OR APPROVED EQUAL.

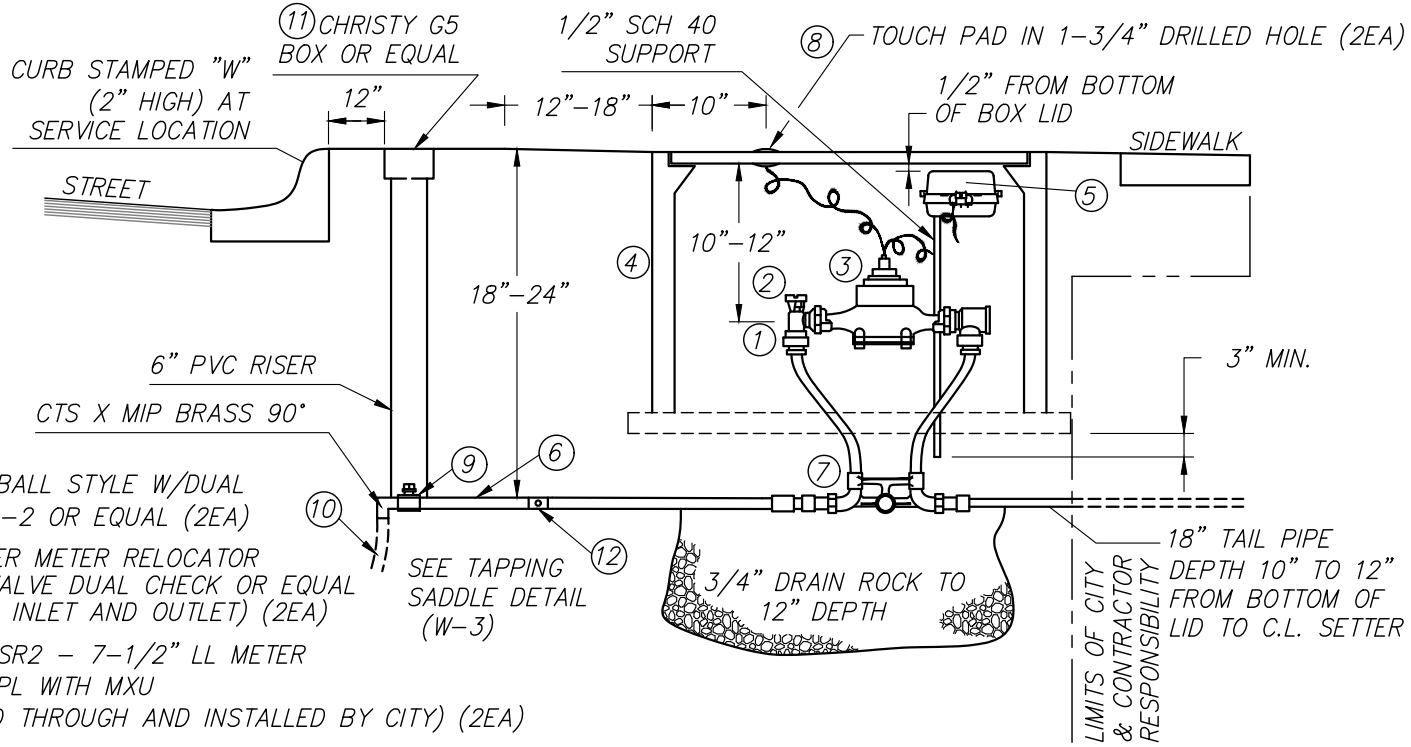

MATERIALS LIST:

(1) **METER SETTER:** MUELLER YOKE/SETTER (BALL STYLE W/DUAL CHECKS) MODEL B-24118-2 OR EQUAL (2EA)

(2) **ANGLE STOP:** MUELLER B-24118-2 COPPER METER RELOCATOR LOCKWING ANGLE BALL & VALVE DUAL CHECK OR EQUAL (W/MIP METER THREADS ON INLET AND OUTLET) (2EA)

(3) **WATER METER:** METER TO BE CENSUS 1" SR2 - 7-1/2" LL METER READ TO BE GALLONS. TRPL WITH MXU (METER TO BE PURCHASED THROUGH AND INSTALLED BY CITY) (2EA)

(4) **METER BOX:** 24"x36" DOUBLE METER BOX BY CHRISTY OR EQUAL (W/BOLT DOWN LID, SEE W-21

(5) **REMOTE TRANSMITTER WITH SUPPORT:** MXU AND TRPL TO BE PURCHASED THROUGH AND INSTALLED BY CITY (2EA)

(6) **BRASS NIPPLE:** 1 1/2" FROM CURB STOP TO TEE.

(7) **METER COUPLING:** MUELLER H-10890 OR EQUAL (1" x 2 1/2" M.I.P. x SWIVEL NUT) (2EA)

(8) **TOUCH PAD:** PURCHASED BY DEVELOPER AND TO BE INSTALLED BY CITY (2EA)

(9) **CURB STOP:** JONES E-1900 BALL VALVE 1 1/2" FIP x 1 1/2" FIP W/ LOCKWING OR EQUAL (INLET: F.I.P. AND OUTLET: F.I.P.) W/IN 6" PVC RISER

(10) **COPPER SERVICE PIPE:** TYPE K COPPER, ALL DOUBLE METER SERVICES TO BE 1 1/2" (FLARED FITTING)

(11) **G5 VALVE BOX CENTERED OVER THE CURB STOP**

(12) **1 1/2" X 1" TEE (SEE DETAIL W-5)**

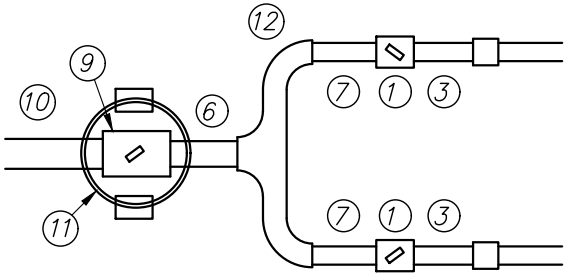

CITY OF LINCOLN
ENGINEERING DEPARTMENT

DOUBLE METER
RESIDENTIAL 1" x 1"
1 1/2" SERVICE LINE

REVISIONS:	DATES:	APPROVED:
		CITY ENGINEER DATE

SCALE: NONE
DATE: SEPTEMBER 2019
DRAWN BY: C.G.

W-4A

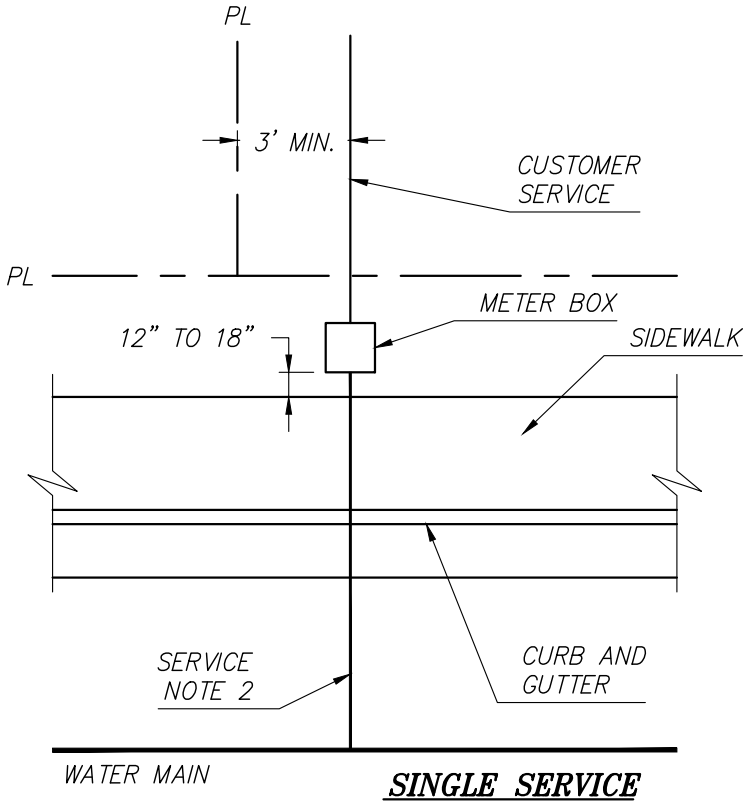

SINGLE SERVICE

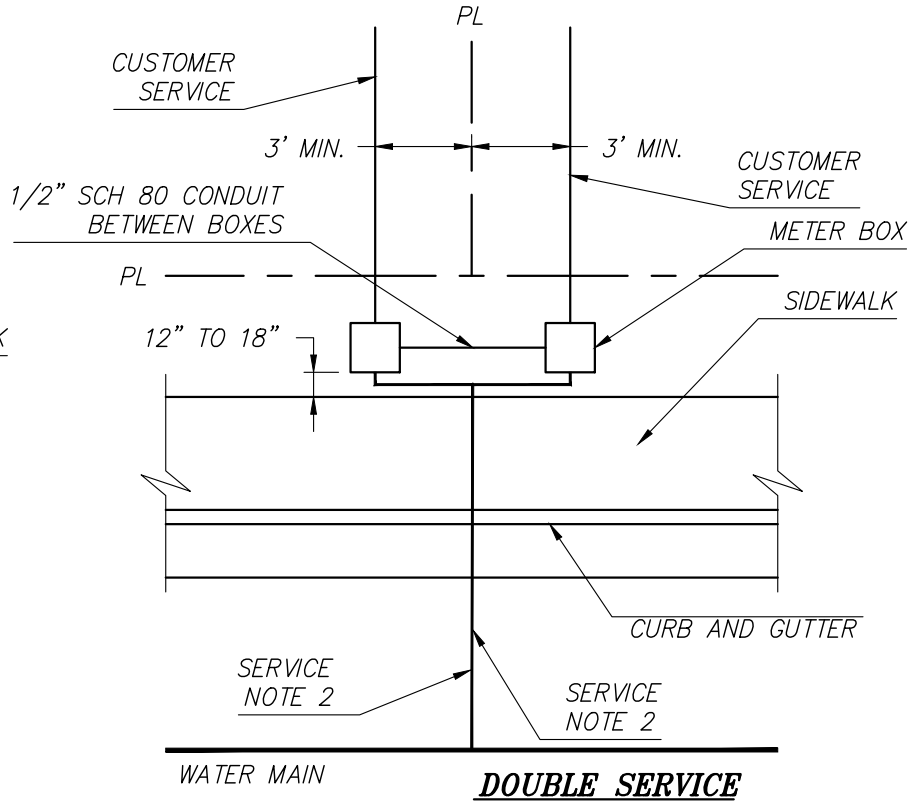

DOUBLE SERVICE

NOTES:

1. METER SIZE SHALL BE 1" x 1", THRU 2". METER SHALL BE INSTALLED BY THE CITY OF LINCOLN.
2. SERVICE PIPE AND COUPLINGS PER MATERIALS LIST, INCLUDING TOUCH PAD AND REMOTE UNIT (REFER TO DETAIL W-4).
3. METER BOXES SHALL BE PER MATERIALS LIST, (REFER TO DETAIL W-4).
4. METER BOXES SHALL HAVE CONCRETE BOLT DOWN LIDS (STEEL TRAFFIC LIDS IN DRIVEWAYS OR AREAS WITH ROLL CURB) SEE MATERIALS LIST, DETAIL W-4, W-4A.
5. SADDLES PER MATERIALS LIST, (REFER TO DETAIL W-3).
6. METER BOXES AND SERVICE PIPING SHALL BE INSTALLED WITH A MINIMUM OF 3' CLEARANCE FROM ALL ELECTRICAL TRANSFORMERS, LIGHT STANDARDS AND OTHER UTILITY BOXES OR VAULTS.

CITY OF LINCOLN
ENGINEERING DEPARTMENT

WATER SERVICE LOCATION

REVISIONS:	DATES:	APPROVED:
		CITY ENGINEER DATE

SCALE: NONE
DATE: SEPTEMBER 2019
DRAWN BY: C.G.

W-5

REQUIRED BEARING AREA – TOTAL SQUARE FEET

TYPE OF FITTING		90° BEND	45° BEND	11 1/4" OR 22 1/2" BEND	TEE OR DEAD END	TEE W/PLUG	CROSS W/PLUG	CROSS W/PLUGS
TYPICAL INSTALLATION		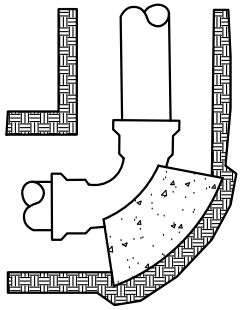	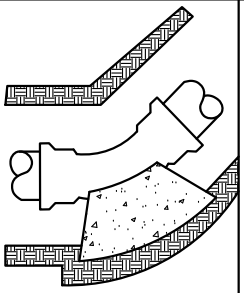	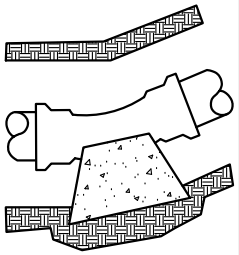	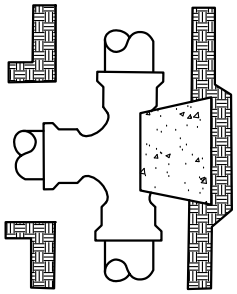	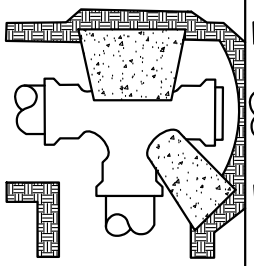	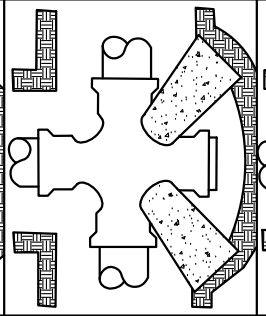	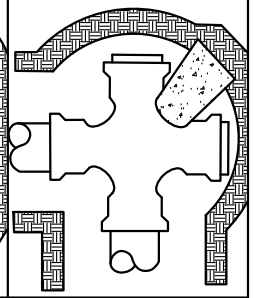
SIZE OF PIPE	3"	1	0.5	0.5	1	1	1	1
	4"	2	1	1	2	2	2	2
	6"	4	2	1	3	4	4	4
	8"	7	4	2	5	7	7	7
	10"	12	6	3	8	12	12	12
	12"	16	10	5	12	16	16	16
	16"	28	15	8	21	28	28	28

NOTES:

1. THRUST BLOCKS TO BE CONSTRUCTED PER CALTRANS STANDARDS
2. AREAS GIVEN ARE FOR CLASS 150 PIPE AT TEST PRESSURE OR 150 P.S.I. IN SOIL WITH 2,000 P.S.F. BEARING CAPACITY. INSTALLATIONS USING DIFFERENT PIPE, TEST PRESSURES, AND/OR SOIL TYPES SHOULD ADJUST AREAS ACCORDINGLY AND CALCULATE BEARING AREA, SUBJECT TO APPROVAL OF ENGINEER.
3. BLOCKS TO BE POURED AGAINST UNDISTURBED SOIL.
4. JOINTS AND FACE OF PLUGS TO BE KEPT CLEAR OF CONCRETE.
5. ALL BENDS 45° OR GREATER SHALL ALSO HAVE RESTRAINT JOINTS AND THRUST BLOCKS; SUBMIT SHOP DRAWINGS TO CITY FOR APPROVAL.
6. BENDS 22 1/2° AND LESS WILL REQUIRE RESTRAINT JOINTS ONLY, PER EBBA SPECS OR EQUAL.

REVISIONS:	DATES:	APPROVED:
		CITY ENGINEER DATE

CITY OF LINCOLN
ENGINEERING DEPARTMENT

THRUST BLOCK BEARING AREA

SCALE: NONE
DATE: SEPTEMBER 2019
DRAWN BY: C.G.

W-6

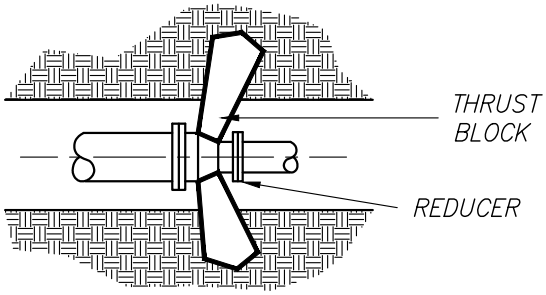

CASE 'A'

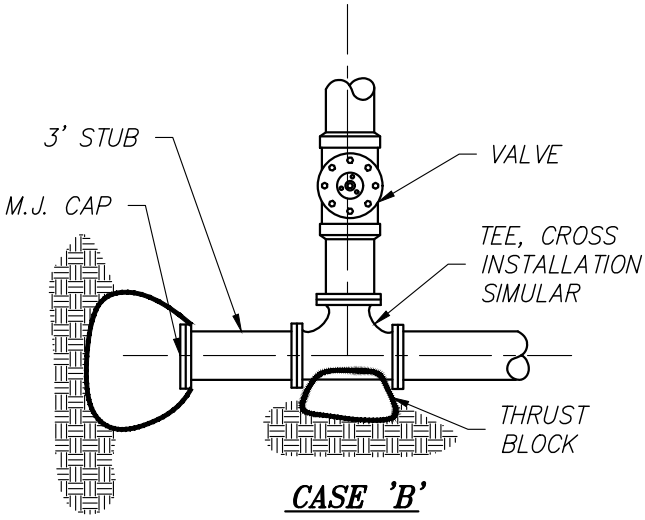

CASE 'B'

TYPICAL DEAD END
ALLOWING FOR FUTURE EXTENSION

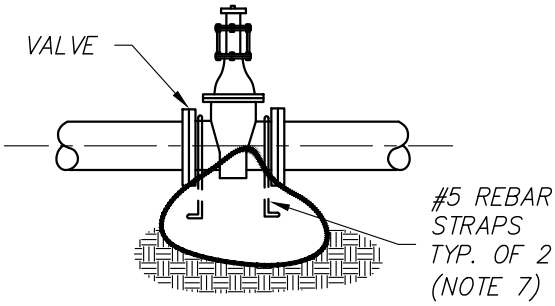

CASE 'D'

VERTICAL SECTION
ANCHOR BLOCK
(VALVES 24" AND GREATER)

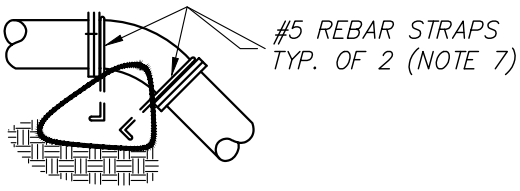

CASE 'C'

VERTICAL SECTION
ANCHOR BLOCK

NOTES:

1. THRUST BLOCKS SHALL BE CONSTRUCTED SO THAT MAJOR BEARING SURFACE IS IN DIRECT LINE WITH THE MAJOR FORCE CREATED BY THE PIPE OR FITTINGS.
2. ALL CONCRETE SHALL BE CLASS "B" PER CALTRANS STANDARDS.
3. CONCRETE SHALL BE FLUID ENOUGH SO THAT IT MAY BE WORKED AROUND THE FITTINGS. A DOUBLE LAYER OF 8 MIL POLYETHLENE FILM SHALL BE PLACED BETWEEN CONCRETE AND METAL FITTING.
4. CONCRETE SHALL BE KEPT BEHIND THE BELL OF THE FITTING.
5. THE THRUST BLOCK BEARING SURFACE SHALL BE PLACED AGAINST UNDISTURBED EARTH AND SHALL HAVE A VOLUME OF 6 CU. FT. AND A MINIMUM BEARING AREA OF 4 SF. (NOTE 8)
6. A CONCRETE PAD SHALL BE PLACED UNDER ALL VALVES 12 INCHES AND LARGER FOR SUPPORT.
7. ALL ANCHOR BLOCKS SHALL BE CONSTRUCTED WITH A MINIMUM OF (2) #5 REBAR STRAPS.
8. EACH THRUST OR ANCHOR BLOCK SHALL BE DESIGNED FOR EACH SPECIFIC APPLICATION. ALL THRUST BLOCKS FOR 12 INCH DIAMETER PIPE AND LARGER TO BE ENGINEERED AND APPROVED BY THE CITY ENGINEER.
9. ALL ANCHOR BLOCKS (CASE C ONLY) SHALL BE ENGINEERED REGARDLESS OF PIPE SIZE AND APPROVED BY THE CITY ENGINEER.

CITY OF LINCOLN
ENGINEERING DEPARTMENT

THRUST BLOCKS AND ANCHOR DETAILS

REVISIONS:	DATES:	APPROVED:	SCALE: NONE DATE: SEPTEMBER 2019 DRAWN BY: C.G.	W-6A
		CITY ENGINEER DATE		

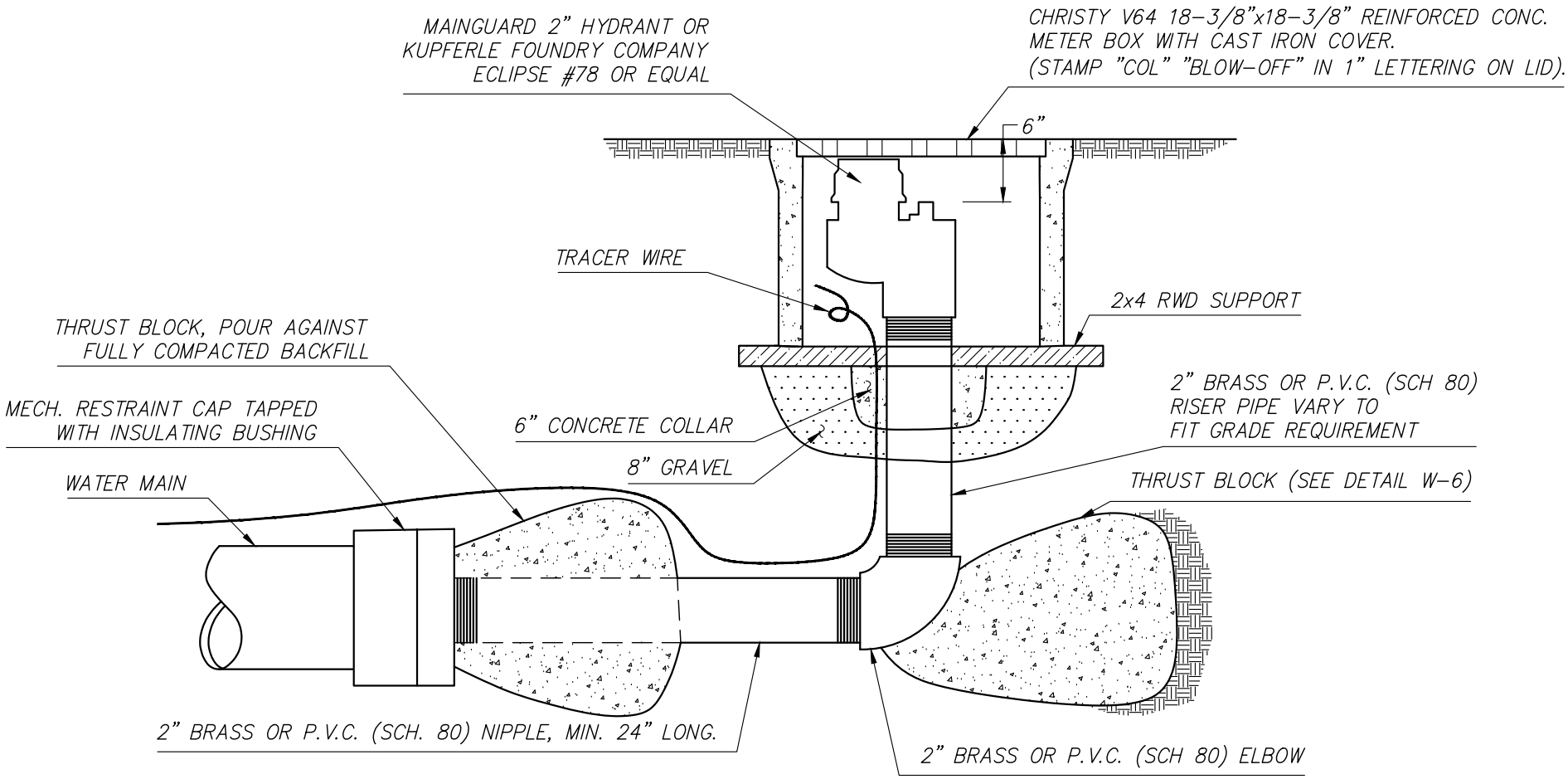

NOTE: IN-LINE BLOW-OFFS TO BE TAPPED W/ JONES #J-996 OR EQUAL W/ TRANSITION FROM COPPER TO BRASS, WITH CORROSION PROTECTION.

CITY OF LINCOLN
ENGINEERING DEPARTMENT

2" BLOW OFF VALVE

REVISIONS:	DATES:	APPROVED:
		CITY ENGINEER DATE

SCALE: NONE
DATE: SEPTEMBER 2019
DRAWN BY: C.G.

W-7

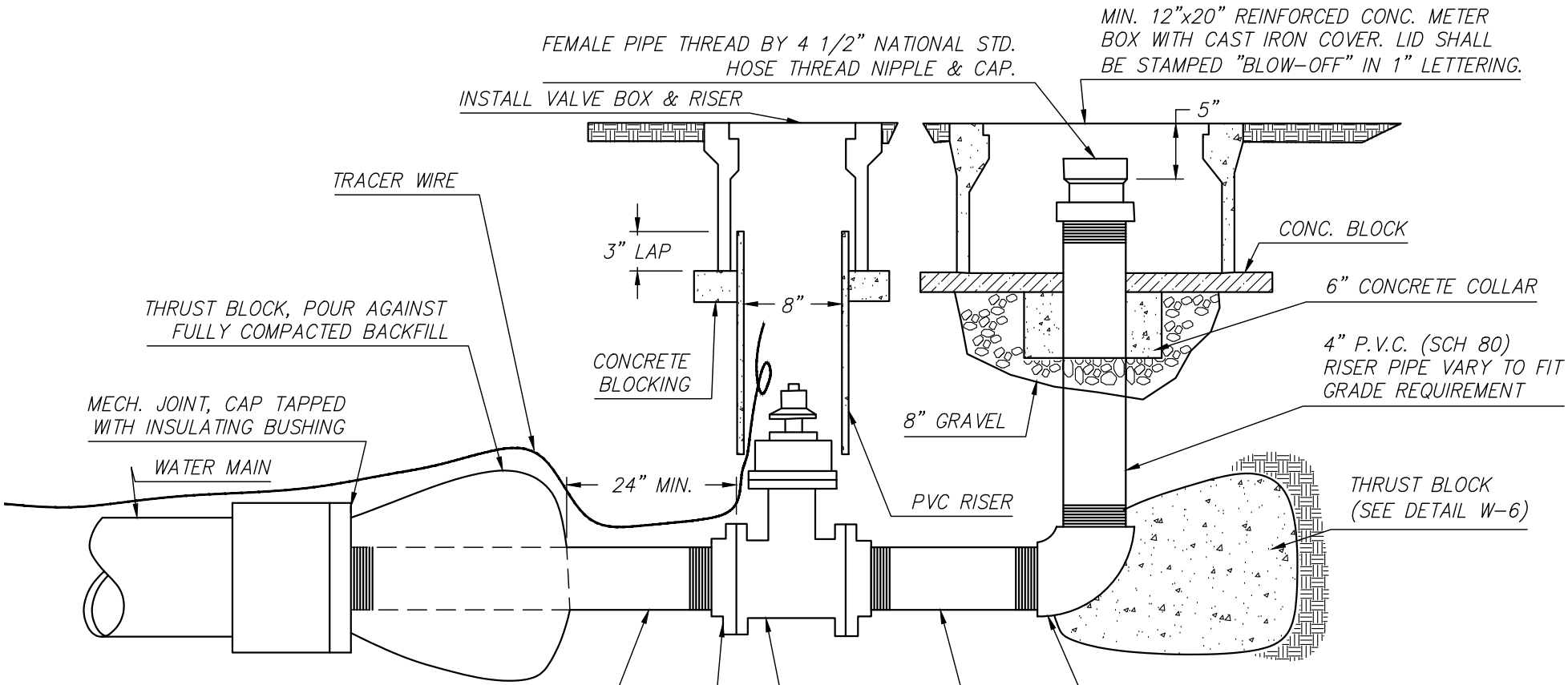

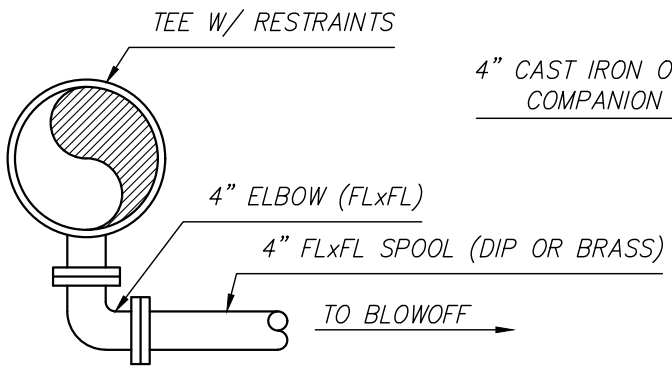

SAG POINT CONNECTION

NOTE: FOR USE IN SPECIAL SITUATIONS W/ APPROVAL OF CITY ENGINEER FOR PIPES GREATER THAN 16"

CITY OF LINCOLN
ENGINEERING DEPARTMENT

4" BLOW OFF VALVE

REVISIONS:	DATES:	APPROVED:
		CITY ENGINEER DATE

SCALE: NONE
DATE: SEPTEMBER 2019
DRAWN BY: C.G.

W-7A

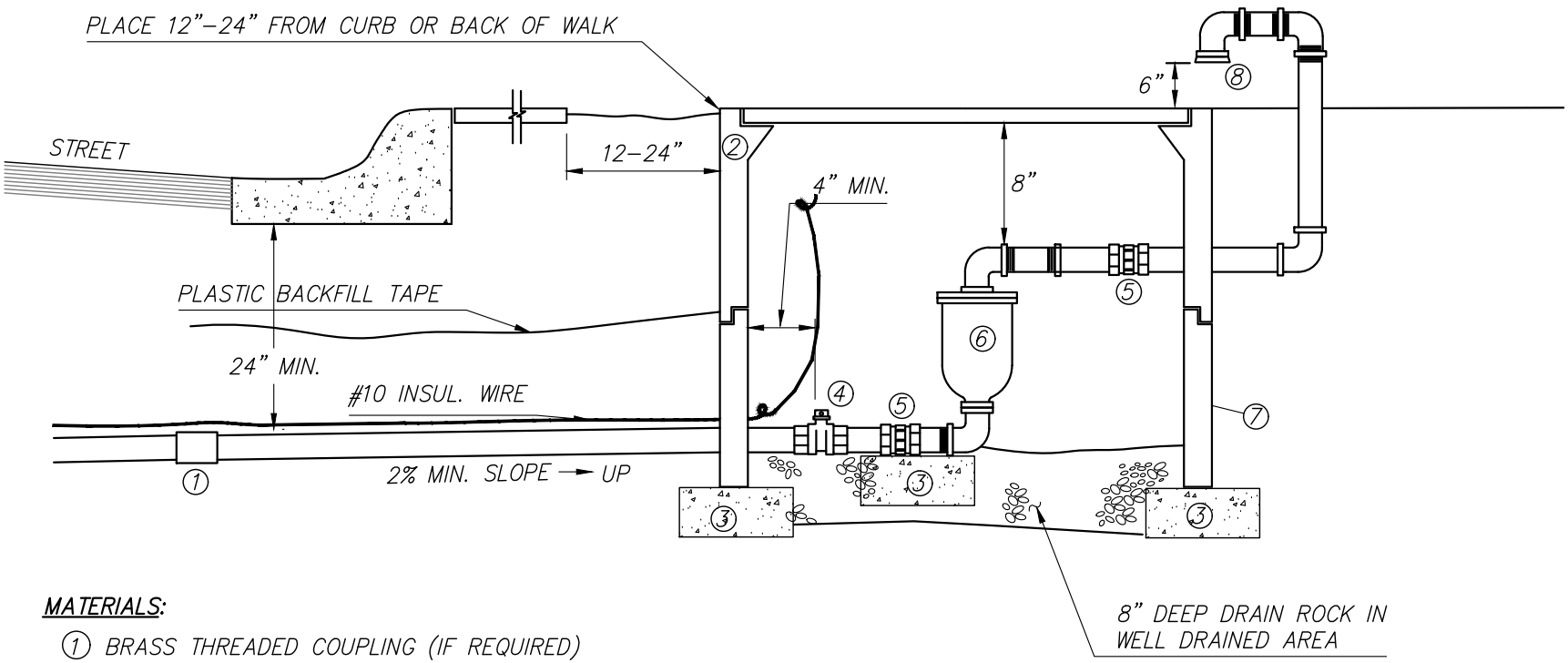

MATERIALS:

1. BRASS THREADED COUPLING (IF REQUIRED)
2. CHRISTY B40 UTILITY BOX OR EQUAL MARKED "COL ARV"
3. CONCRETE BLOCK SUPPORTS
4. CURB STOP – MUELLER B20200 OR EQUAL (F.I.P. x F.I.P.)
5. BRASS UNION
6. COMBINATION AIR / VACUUM VALVE
7. CHRISTY EXTENSION SPOOL (IF NECESSARY) – CHRISTY B40 BOX
8. BRASS CAP WITH 9 DRILLED 1/16" HOLES OR APPROVED EQUAL AND 20 MESH STAINLESS STEEL SCREEN TO VENT OR APPROVED EQUAL.

NOTES:

1. BURIED PIPE AND FITTINGS SHALL BE WRAPPED WITH 8 MIL POYETHYLENE OR APPROVED EQUAL.

CITY OF LINCOLN
ENGINEERING DEPARTMENT

1" AND 2" AIR RELEASE VALVE

REVISIONS:	DATES:	APPROVED:
		CITY ENGINEER DATE

SCALE: NONE
DATE: SEPTEMBER 2019
DRAWN BY: C.G.

W-8

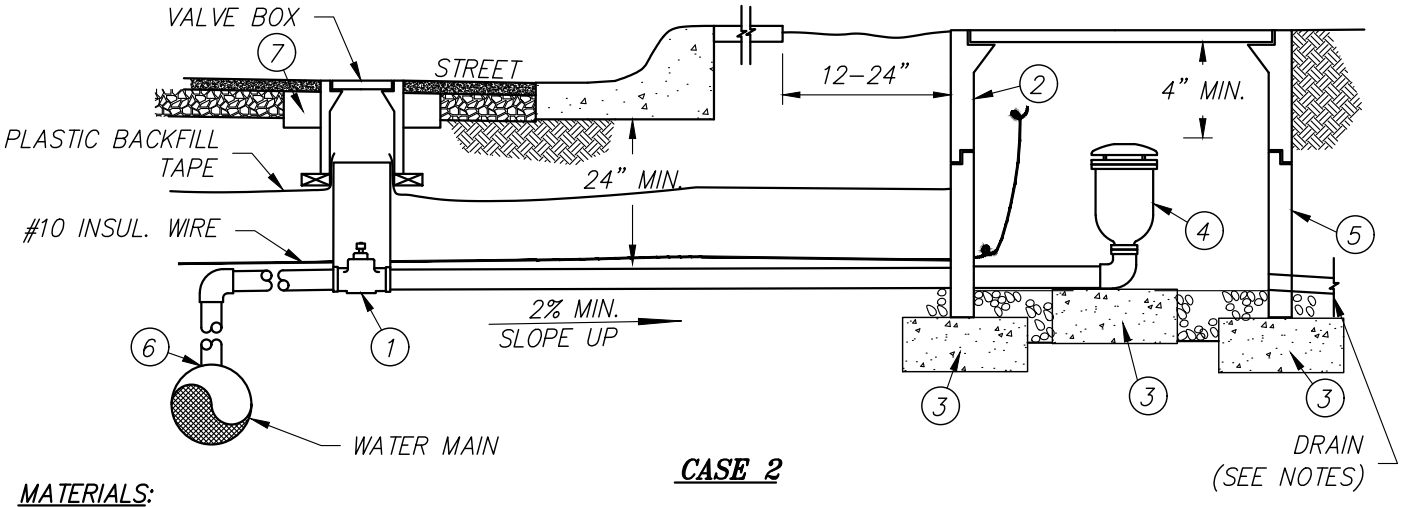

CASE 2

MATERIALS:

1. 4" GATE VALVE
2. CHRISTY B48 UTILITY BOX W/ TRAFFIC COVER OR EQUAL MARKED "COL ARV"
3. CONCRETE BLOCK SUPPORTS
4. COMBINATION AIR / VACUUM VALVE
5. CHRISTY EXTENSION SPOOL (IF NECESSARY) – CHRISTY B48 BOX OR EQUAL AND STEEL LID (MARKED W/ 1" LETTERING "ARV")
6. SEE STD DETAIL W-3 FOR CONNECTION TO WATERMAIN.
7. 6"x6" CONCRETE COLLAR.

NOTES:

1. BURIED PIPE AND FITTINGS SHALL BE WRAPPED WITH 8 MIL POLYETHYLENE OR APPROVED EQUAL.
2. ADD 20 MESH STAINLESS STEEL SCREEN TO VENT
3. CALIFORNIA WATERWORKS STANDARDS, TITLE 22, FOR AIR AND VACUUM RELIEF VALVES STATES:
   - (A) VENT OPENINGS FOR AIR AND VACUUM RELIEF AND AIR RELEASE VALVES SHALL BE:
     - (1) EXTENDED AT LEAST (1) ONE FOOT (0.3m) ABOVE GRADE AND ABOVE MAXIMUM RECORDED HIGH WATER LEVEL. (CASE 1)
     - (2) DOWNWARD FACING AND SCREENED.
   - (B) WHERE THE REQUIREMENTS OF (A)(1) CANNOT BE PRACTICABLY MET, VENT OPENINGS MAY BE LOCATED IN A SUBSURFACE CHAMBER OR PIT (CASE 2) UNDER THE FOLLOWING CONDITIONS:
     - (1) PIT IS ADEQUATELY DRAINED. (METHOD TO BE APPROVED BY THE CITY ENGINEER).
     - (2) THE PIT DRAIN IS NOT CONNECTED BY PIPE OR OTHER CLOSED CONDUIT TO A SEWER OR STORM DRAIN WITHOUT AN AIR SEPARATION.

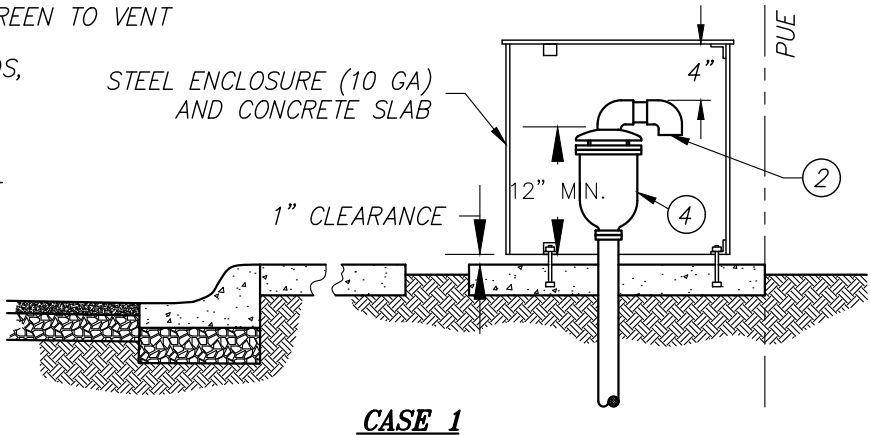

CASE 1

CITY OF LINCOLN
ENGINEERING DEPARTMENT

4" COMBINATION AIR RELEASE VALVE AND VACUUM

REVISIONS:	DATES:	APPROVED:
		CITY ENGINEER DATE

SCALE: NONE
DATE: SEPTEMBER 2019
DRAWN BY: C.G.

W-8A

BOX

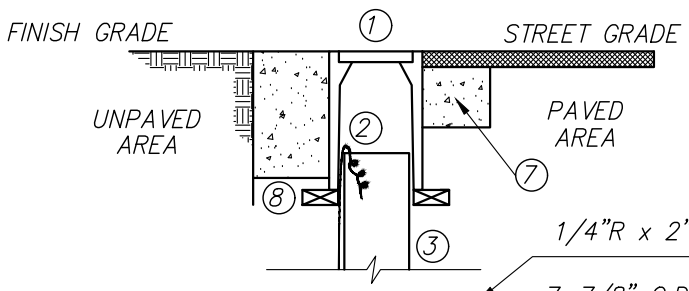

BUTTERFLY VALVE OR GATE VALVE

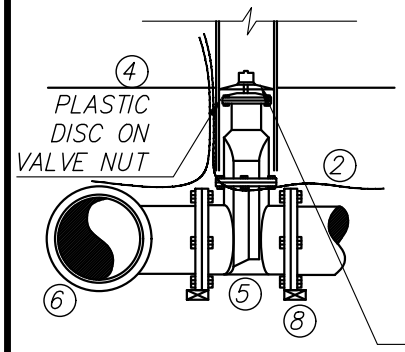

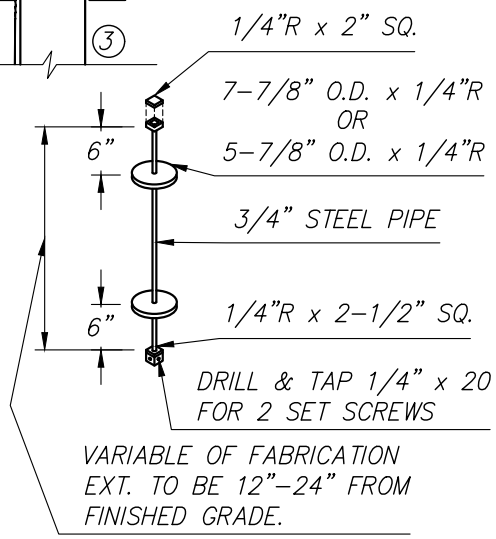

VALVE OPERATING NUT EXTENSION

REQUIRED WHERE VALVE NUT IS IN EXCESS OF 40" DEEP BELOW FINISH GRADE.

NOTES:

1. TRACING WIRE THROUGH VALVE BOXES SHALL BE PLACED OUTSIDE OF RISER BUT INSIDE OF BOX.
2. TRACING WIRE SHALL BE SPLICED INSIDE THE VALVE BOX PER DETAIL BELOW AND SHALL LOOP WITHIN THE VALVE BOX WITH 18" OF SLACK WIRE.
3. ALL GATE AND BUTTERFLY VALVES SHALL BE CENTERED IN A ONE PIECE RISER STOCK AND PLUMB.
4. OPERATOR NUTS DEEPER THAN 36 INCHES FROM FINISH GRADE SHALL REQUIRE A VALVE NUT EXTENSION 2 FEET MINIMUM IN LENGTH.
5. VALVE BOXES LOCATED IN A PAVED AREA SHALL BE PLACED IN A 6"x6" CONCRETE COLLAR. PLACEMENT SHALL BE CONTIGUOUS WITH THE UNDERSIDE OF THE PROPOSED PAVEMENT.
6. VALVE BOXES LOCATED IN AN UNPAVED AREA SHALL BE PLACED IN A 12" DEEP BY 6" WIDE CONCRETE COLLAR. THE COLLAR SHALL BEGIN AT FINISH GRADE.
7. INSTALL CONCRETE BLOCKING UNDER ENTIRE PERIMETER OF BOX.
8. VALVES AND FITTINGS SHALL BE WRAPPED IN 8 MIL POLYETHYLENE.

MATERIALS:

1. CONCRETE VALVE BOX
2. #10 INSULATED TRACING WIRE OUTSIDE RISER
3. 8" RISER STOCK
4. PLASTIC BACKFILL TAPE
5. GATE VALVE FOR 12"≤ AND BUTTERFLY VALVES FOR 16"≥
6. DUCTILE IRON TEE W/ RESTRAINTS
7. CONCRETE COLLAR (SEE NOTES 5 & 6)
8. CONCRETE BLOCKING (SEE NOTES)

WIRE SPLICE NOTES:

1. TWIST THE WIRE A MINIMUM OF (5) TIMES ON EACH END.
2. INSTALL SPLIT BOLT CONNECTOR.
3. COVER THE ENTIRE SPLICE WITH MASTIC TAPE WRAP
4. WRAP MASTIC WITH VINYL TAPE.

* SOLDERING MAY BE INCLUDED IN ADDITION TO THE ABOVE.

TRACING WIRE SPLICE OR EQUAL

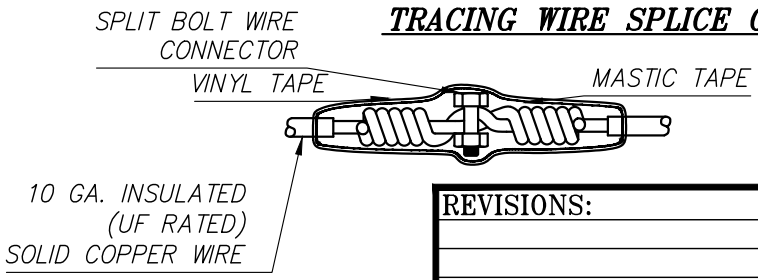

CITY OF LINCOLN
ENGINEERING DEPARTMENT

GATE AND BUTTERFLY VALVE AND BOX

REVISIONS:	DATES:	APPROVED:
		CITY ENGINEER DATE

SCALE: NONE
DATE: SEPTEMBER 2019
DRAWN BY: C.G.

W-9

NOTES:

1. INSTALL CONCRETE BLOCKING UNDER ENTIRE PERIMETER OF VALVE BOX
2. INSTALL #10 INSULATED TRACING WIRE FROM MAIN TO CURB STOP BOX
3. INSTALL SAMPLING STATION DOOR FACING TOWARD STREET
4. SAMPLING STATION TO BE PURCHASED FROM SUPPLIER AND INSTALLED BY CONTRACTOR
5. LOCATION OF SAMPLING STATIONS PER CITY ENGINEER

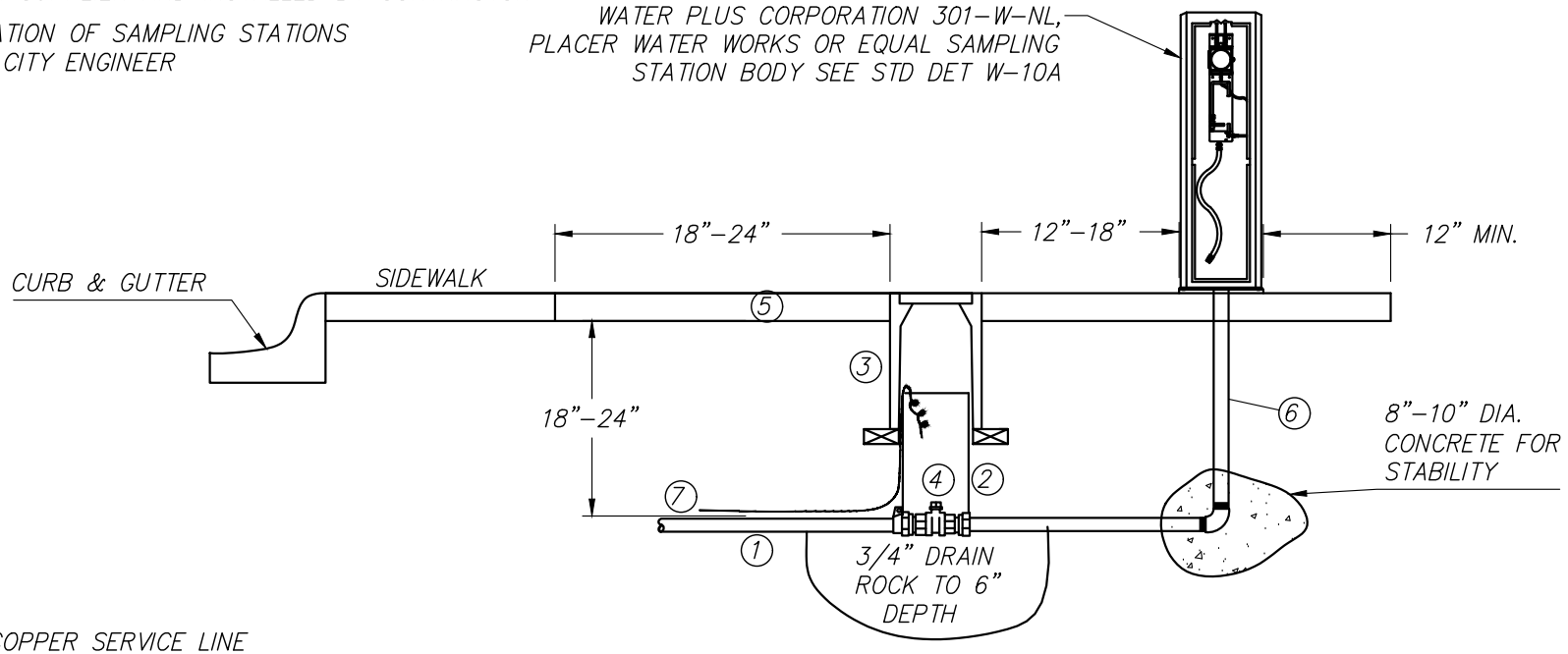

MATERIALS:

1. 3/4" COPPER SERVICE LINE POLYETHYLENE ENCASED.
2. 6" DIAMETER RISER STOCK
3. CHRISTY TRAFFIC BOX WITH METAL LID
4. CURB STOP - MUELLER B-25166 BALL METER VALVE W/ LOCKWING OR EQUAL
5. 3 1/2" THICK REINFORCED CONCRETE SLAB
6. 3/4" BRASS PIPE
7. INSTALL TRACING WIRE FROM MAIN TO CURB STOP WIRE OUTSIDE THE RISER, BUT INSIDE THE BOX.

CITY OF LINCOLN
ENGINEERING DEPARTMENT

SAMPLING STATION WITH PRESSURE RECORDER

REVISIONS:	DATES:	APPROVED:
		CITY ENGINEER DATE

SCALE: NONE
DATE: SEPTEMBER 2019
DRAWN BY: C.G.

W-10

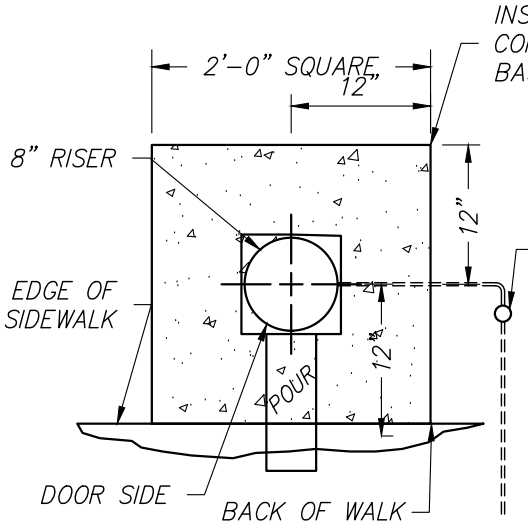

TYPICAL INSTALLATION

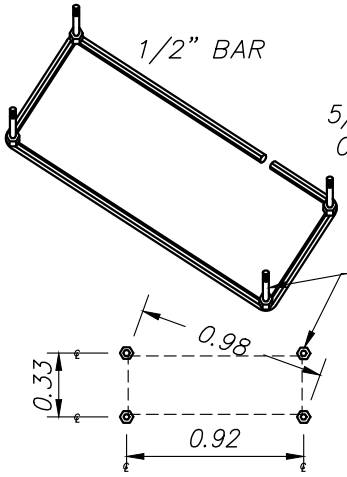

REBAR EMBED

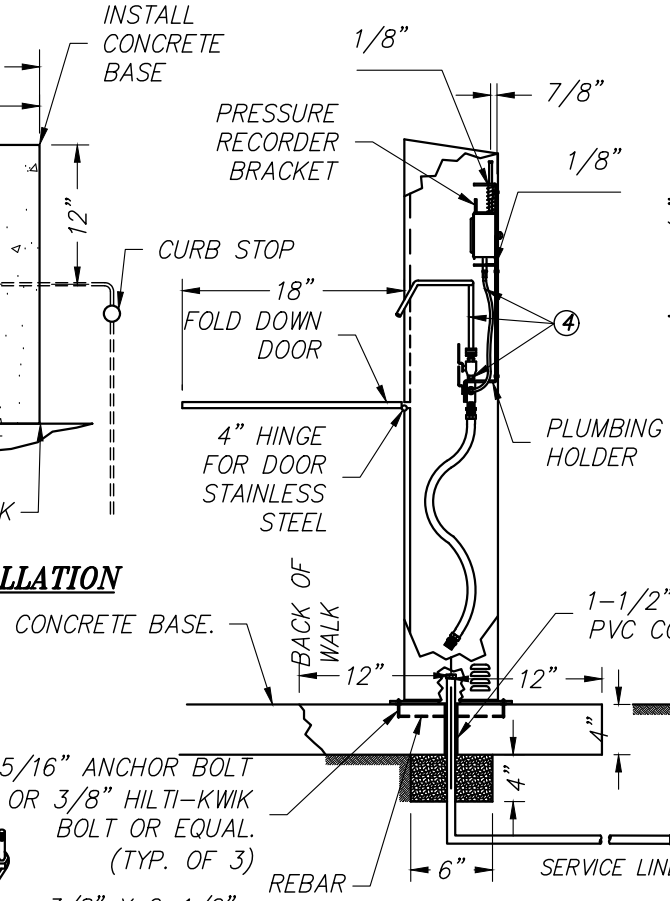

SECTIONAL ELEVATION

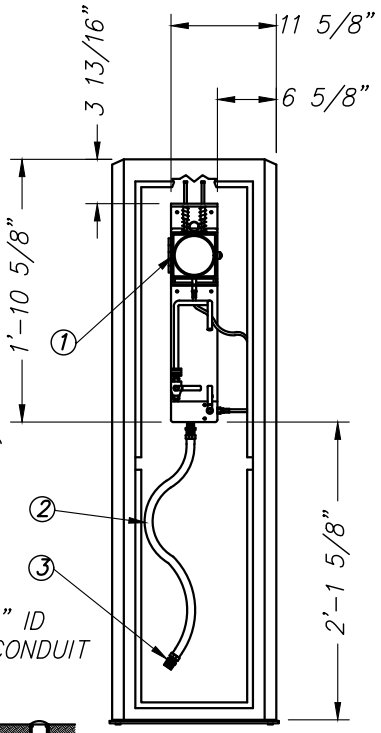

FRONT ELEVATION

NOTES:

1. PLACER WATER WORKS PS/RWS-SS OR EQUAL. ANY MODIFICATIONS TO SPECIFICATIONS SHALL BE APPROVED BY THE WATER DIVISION.
2. ALL CONNECTIONS SHALL BE WRAPPED IN TEFLON TAPE.
3. FOR FULL FRONT ACCESS, LOWER HINGED DOOR TO 45-DEGREE ANGLE THEN LIFT 1-1/2 INCH VERTICALLY TO UNLATCH LOWER DOOR.
4. WHEN SAMPLING, SWIVEL SPIGOT OUT OF CABINET TO PURGE.
5. 3/8" MINIMUM i.d. PLUMBING ALLOWS OVER 6 GALLONS PER MINUTE FLOW.
6. THE SWIVEL FEATURE TOGETHER WITH FOUR SQUARE INCHES OF VENTILATION SURFACE WILL KEEP THE INTERIOR OF CABINET DRY.
7. ALL FOUR LOUVER LOCATIONS PROTECTED WITH STAINLESS STEEL BUG SCREEN.
8. ALL PLUMBING PARTS ARE STAINLESS STEEL EXCEPT THE 3/4 INCH FLEXIBLE COPPER HOOK-UP LINE.
9. THE PRESSURE RECORDER BRACKET ASSEMBLY IS SPRING LOADED FOR EASY DISCONNECTION AND REMOVAL.
10. SECURITY OBTAINED WITH FLUSH MOUNTED KEYED BARRELED LOCK.
11. CABINET BODY MATERIAL - CARBON STEEL.
12. THE CARBON STEEL BODY IS EPOXY PRIMERED WITH DEVRAN 224 hs "BUFF" BY DEVOE. THE INTERIOR FINISH IS DEVTHANE URETHANE EPOXY 379 "SEA HORSE" BY DEVOE. THE EXTERIOR FINISH IS DEVTHANE URETHANE EPOXY 379 "HUNTER GREEN" BY DEVOE.

LEGEND:

1. 4" STEM MOUNTED PRESSURE RECORDER - DICKSON CO. MODEL PW450 7 DAY WITH LIFTING ARM
2. 3/4" COPPER FLEX TUBE
3. 3/4" BRASS CONNECTOR TO SERVICE LINE
4. 3/8" STAINLESS STEEL PLUMBING, BALL VALVES, CONNECTORS AND FLEX TUBING

CITY OF LINCOLN
ENGINEERING DEPARTMENT

WATER SAMPLER WITH PRESSURE RECORDER

REVISIONS:	DATES:	APPROVED:
		CITY ENGINEER DATE

SCALE: NONE
DATE: SEPTEMBER 2019
DRAWN BY: C.G.

W-10A

NOTE: LOCATIONS ARE INDICATED FOR TYPICAL RESIDENTIAL PLACEMENT. IN COMMERCIAL AREAS FIRE HYDRANTS SHALL BE PROTECTED FROM VEHICULAR DAMAGE AND ACCESSIBLE TO FIRE PROTECTION EQUIPMENT AND LOCATIONS TO BE APPROVED BY CITY ENGINEER.

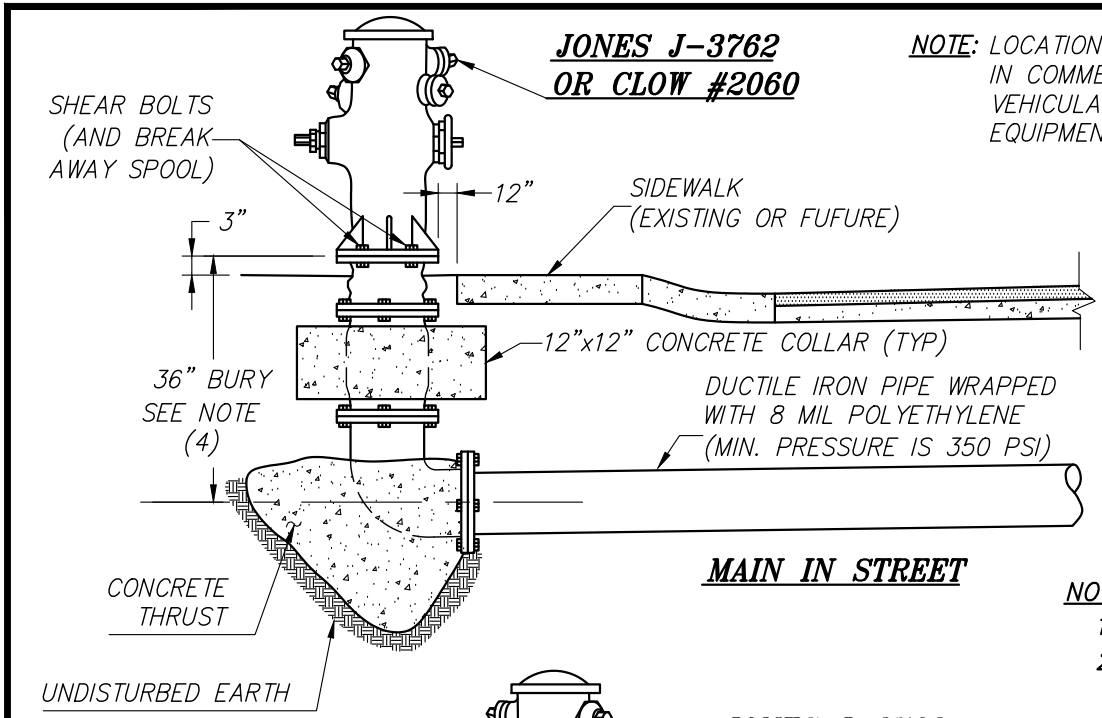

MAIN IN STREET

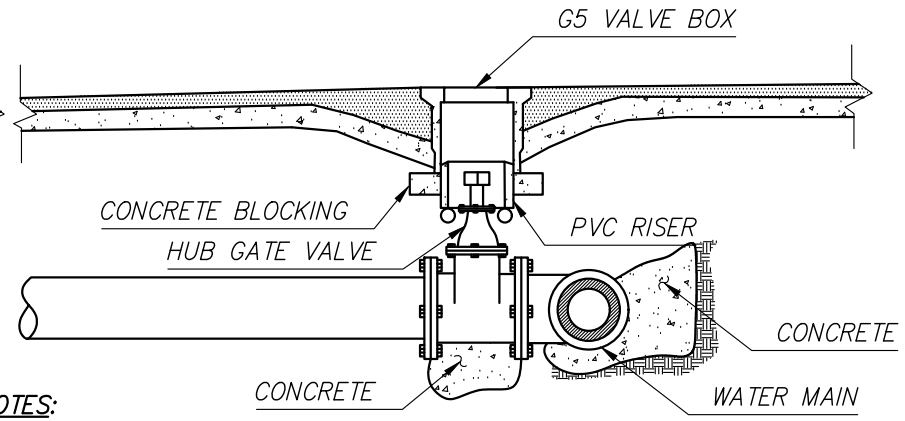

NOTES:

1. VALVE BOX TO BE SET ON CONC. OR BRICK COLLER(TYP).
2. DETAILS SHOWN FOR VALVES ON HYDRANT LATERALS SHALL ALSO APPLY TO VALVES ON MAINS
3. LIST OF APPROVED MATERIALS CAN BE FOUND IN SECTION 4 OF THE STANDARDS (TYPES SHOWN FOR ILLUSTRATION ONLY)
4. BURY LENGTH TO BE 42" WHERE LATERAL TO HYDRANT IS INSTALLED IN SELECT SYSTEM ROADWAY WHICH WILL BE SO SPECIFIED.
5. ALL JOINTS TO BE FLANGED AND OR RESTRAINT AS APPROVED BY CITY ENGINEER.
6. ALL VALVES TO BE WRAPPED W/ 8 MIL POLYETHYLENE
7. HYDRANTS SHALL HAVE: –2 COATS OF SAFETY YELLOW.
   –IRON CAPS (NOT BRONZE OR PLASTIC)
   –TAMPER–PROOF SECURITY BOLT SECURING HYDRANT HEAD TO THE SPOOL.

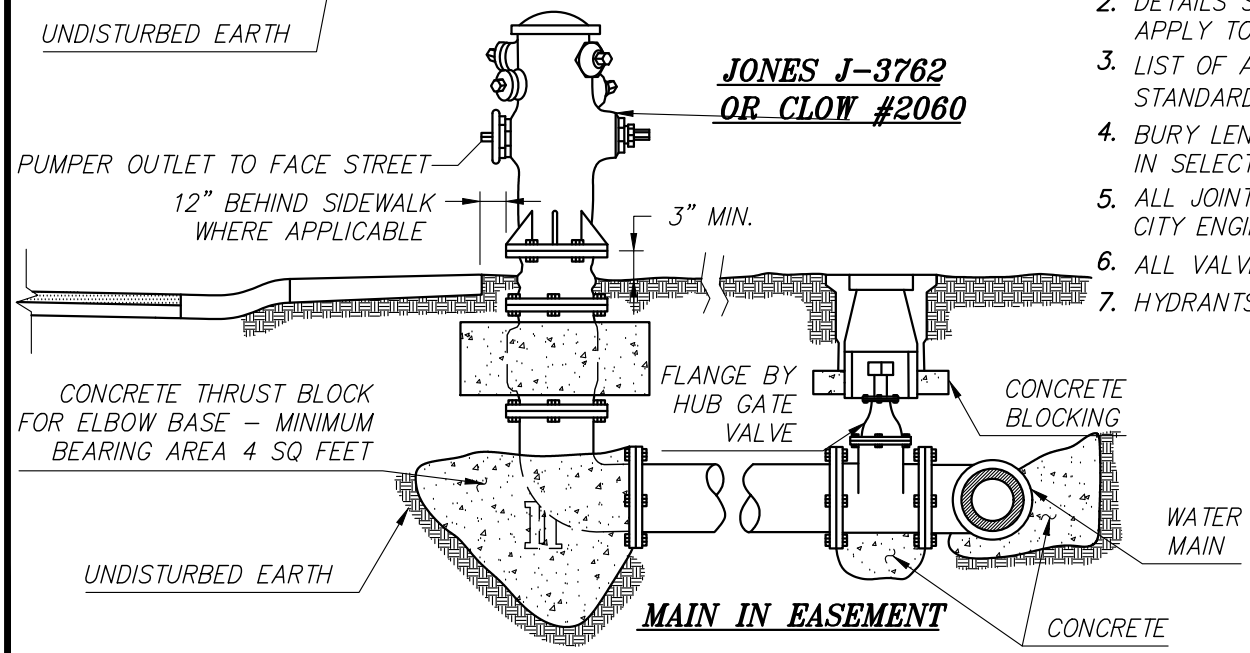

MAIN IN EASEMENT

CITY OF LINCOLN
ENGINEERING DEPARTMENT

FIRE HYDRANT INSTALLATION

REVISIONS:	DATES:	APPROVED:
		CITY ENGINEER DATE

SCALE: NONE
DATE: SEPTEMBER 2019
DRAWN BY: C.G.

W-11

NOTES:

1. NO WATER SHALL BE DRAWN THROUGH THE BACKFLOW DEVICE UNTIL IT HAS BEEN TESTED BY THE CITY.
2. THE BACKFLOW DEVICE SHALL BE INSULATED WITH A CITY APPROVED FREEZE PROTECTION BAG
3. FITTINGS SHALL BE FLANGE BY FLANGE OR RESTRAINED.
4. BURIED NUTS AND BOLTS SHALL HAVE SAP CAPS.
5. BURIED PIPE AND FITTINGS SHALL BE WRAPPED WITH 8 MIL POLYETHYLENE OR APPROVED EQUAL.
6. PIPE AND FITTINGS SHALL BE DUCTILE IRON.

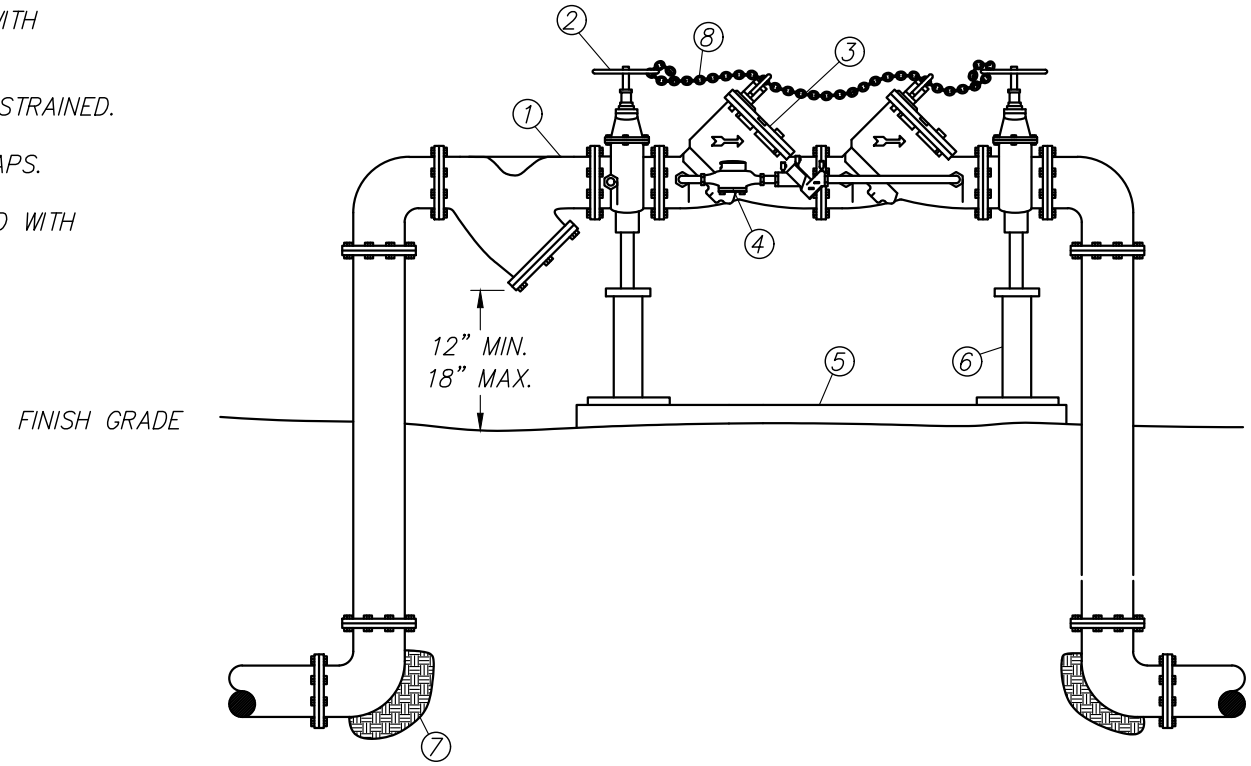

MATERIALS:

1. FLANGED "Y" TYPE STRAINER
2. OS & Y STEAM GATE VALVE (TYP.)
3. DOUBLE DETECTOR CHECK ALL DEVICES TO BE APPROVED BY CITY
4. DETECTOR METER
5. 4" THICK REINFORCED CONCRETE SLAB (CLASS "B" CONCRETE)
6. SUPPORTS 2-TYP. SHALL BE BOLTED DOWN WITH A MINIMUM OF TWO BOLTS EACH
7. THRUST BLOCK (TYP.) DETAIL W-6
8. 1/4" NON CASE HARDENED CHAIN WITH LOCK BETWEEN VALVES

CITY OF LINCOLN
ENGINEERING DEPARTMENT

ONSITE FIRE PROTECTION AND BACKFLOW ASSEMBLY

REVISIONS:	DATES:	APPROVED:
		CITY ENGINEER DATE

SCALE: NONE
DATE: SEPTEMBER 2019
DRAWN BY: C.G.

W-12

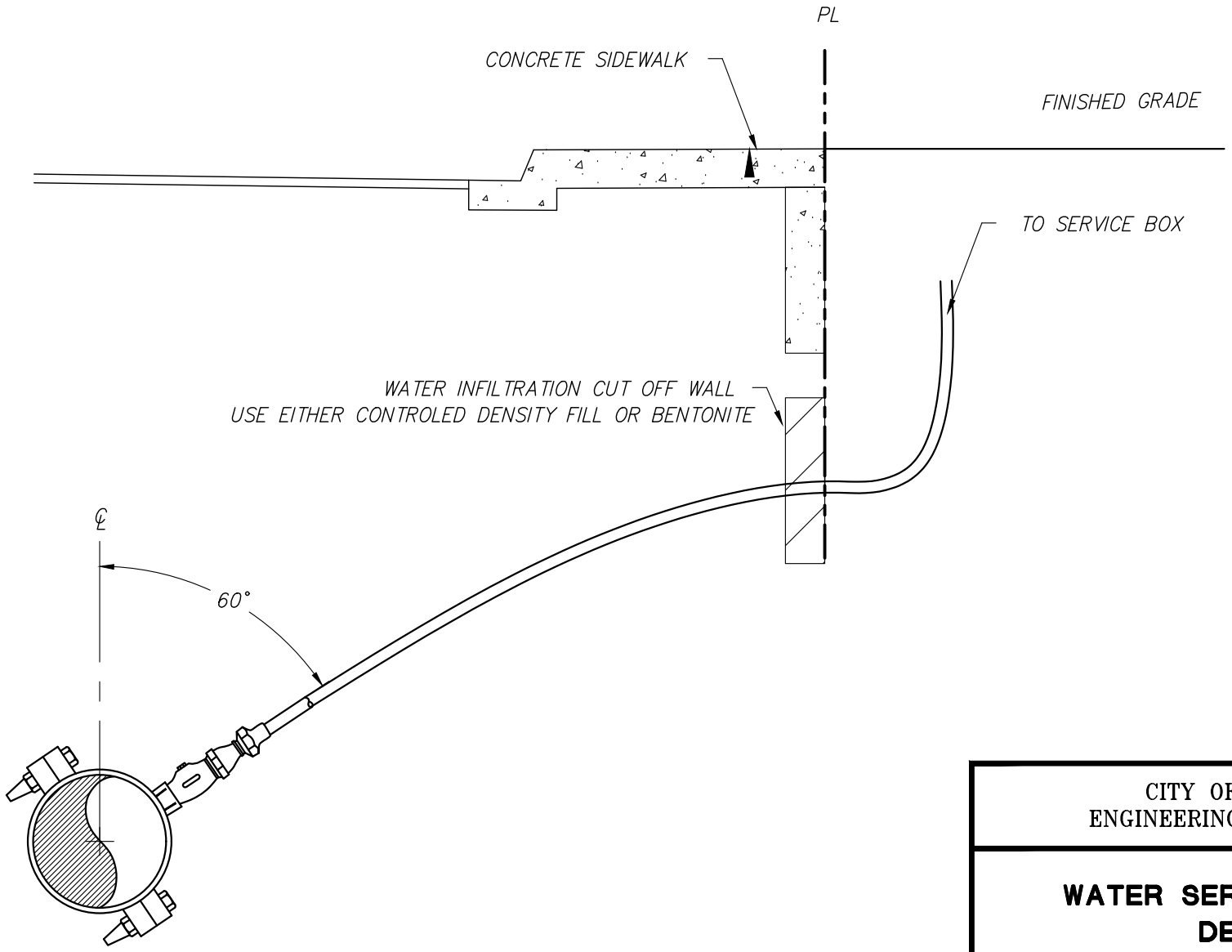

PVC PIPE SADDLE

REVISIONS:	DATES:	APPROVED:
		CITY ENGINEER DATE

CITY OF LINCOLN
ENGINEERING DEPARTMENT

WATER SERVICE CUT OFF DETAIL

SCALE: NONE
DATE: SEPTEMBER 2019
DRAWN BY: C.G.

W-12A

NOTES:

1. REDUCED PRESSURE PRINCIPLE DEVICES (RPP) SHALL BE REQUIRED WHEN ADDITIVES SUCH AS ANTIFREEZE ARE ADDED TO THE FIRE SYSTEM CREATING A HEALTH HAZARD OR AS REQUIRED BY THE CITY ENGINEER.
2. FIRE DEPARTMENT CONNECTIONS SHALL BE 'FM' OR 'UL' LISTED.
3. POST INDICATOR SHALL BE 'FM' OR 'UL' LISTED.
4. MAXIMUM DISTANCE FROM FIRE HYDRANT TO F.D. CONNECTION SHALL BE 150 FEET.
5. ALL FIRE SERVICE PIPING AND APPURTENANCES SHALL BE INSPECTED BOTH BY THE CITY OF LINCOLN ENGINEERING DEPARTMENT AND THE CITY OF LINCOLN FIRE DEPARTMENT.
6. BACKFLOW DEVICES ARE REQUIRED BY STATE OF CALIFORNIA ADMIN. CODE, TITLE 17.
7. ALL VALVES TO BE FITTED WITH FREEZE PROTECTION BAG AS APPROVED BY ENGINEER

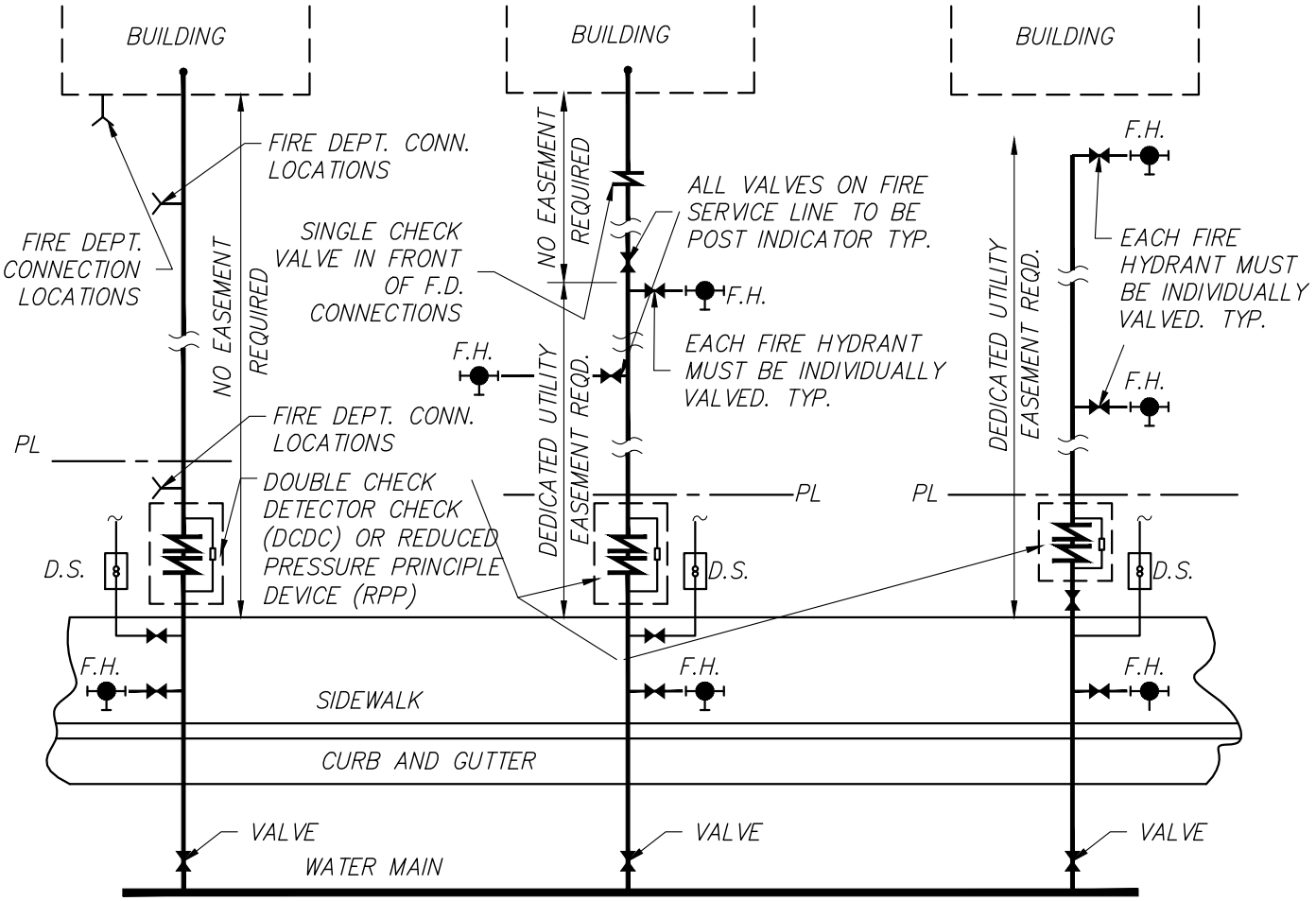

CASE 1
FIRE SERVICE WITH SPRINKLER SYSTEM AND NO HYDRANTS

CASE 2
FIRE SERVICE WITH SPRINKLERS AND HYDRANTS

CASE 1
FIRE SERVICE WITH HYDRANTS ONLY

CITY OF LINCOLN
ENGINEERING DEPARTMENT

TYPICAL FIRE SERVICES

REVISIONS:	DATES:	APPROVED:	SCALE: NONE DATE: SEPTEMBER 2019 DRAWN BY: C.G.	W-13
		CITY ENGINEER DATE		

NOTES:

BACKFLOW CONTROL DEVICES ARE REQUIRED UNDER THE STATE OF CALIFORNIA ADMINISTRATIVE CODE, TITLE 17, AND SHALL BE INSTALLED IN ACCORDANCE THEREOF.

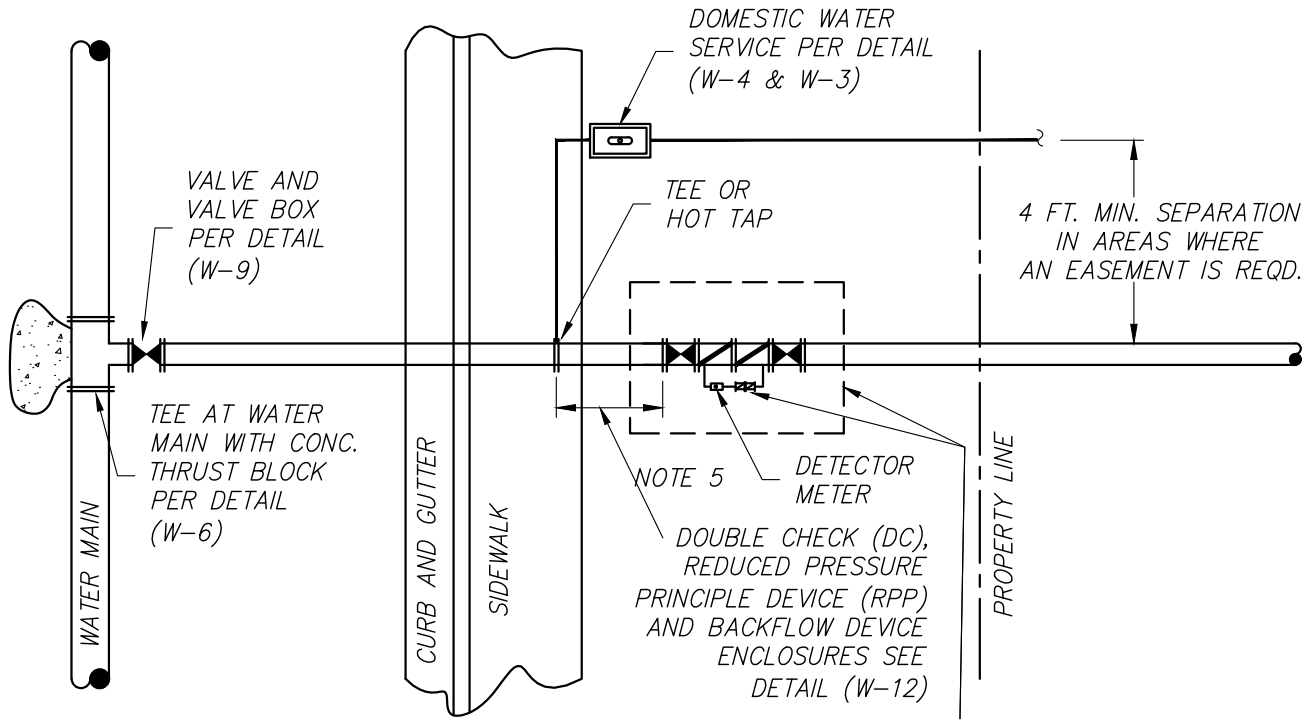

NOTES:

1. ALL CONSTRUCTION SHALL BE IN ACCORDANCE WITH THE CITY OF LINCOLN CONSTRUCTION STANDARDS AND THE SPECIFICATIONS FOR PUBLIC WORKS CONSTRUCTION (GREEN BOOK, LATEST EDITION) AND THE UNIFORM PLUMBING CODE (U.P.C.).
2. ALL LINES BRANCHING FROM FIRE SERVICE SHALL BE VALVED SEPARATELY.
3. DOMESTIC TAPS OF 2" AND SMALLER SHALL BE PER CITY REQUIREMENTS.
4. FOR PIPE REQUIREMENTS SEE MATERIALS LIST.
5. AN AREA OF 12" WIDE ON ALL SIDES OF ENCLOSURE SHALL BE KEEP FREE OF ALL VEGETATIVE OBSTRUCTIONS.
6. DETECTOR METER MUST REGISTER FLOW WHEN TESTED.
7. DOUBLE CHECK OR REDUCED PRESSURE PRINCIPLE DEVICE MUST PASS CERTIFIED BACKFLOW TEST.
8. DEDICATED UTILITY EASEMENT REQUIRED FOR FIRE SERVICE FROM RIGHT-OF-WAY LINE TO ALL FIRE HYDRANTS.
9. DOMESTIC SERVICE SHALL BE INSTALLED IN SEPARATE TRENCH IN ALL AREAS WHERE AN EASEMENT IS REQUIRED.
10. ALL VALVES TO BE WEATHERIZED WITH FREEZE PROTECTION BAG AS APPROVED BY ENGINEER.
11. GATE VALVES TO BE INSTALLED BETWEEN TEE AND BACKFLOW.

CITY OF LINCOLN
ENGINEERING DEPARTMENT

FIRE SERVICES INSTALLATION

REVISIONS:	DATES:	APPROVED:
		CITY ENGINEER DATE

SCALE: NONE
DATE: SEPTEMBER 2019
DRAWN BY: C.G.

W-14

NOTES:

1. NO WATER IS TO BE DRAWN THROUGH THE BACKFLOW DEVICE UNTIL IT HAS BEEN TESTED BY THE CITY OF LINCOLN PUBLIC SERVICES.
2. ALL FITTINGS AND PIPING SHALL BE BRASS.
3. IF USED FOR IRRIGATION DO NOT INCLUDE PRESSURE REGULATOR.
4. INSTALL CONCRETE BLOCKING UNDER ENTIRE PERIMETER OF UTILITY BOX.
5. CONTRACTOR TO LAY 3/4" DRAIN ROCK 12" IN DEPTH UNDER METER SETTER.
6. CONTRACTOR SHALL INSTALL 1/2" CONDUITS 18"–24" DEEP
7. WATER METERS SHALL BE PURCHASED THROUGH THE CITY. PURCHASE INCLUDES INSTALLATION.
8. THE BACKFLOW DEVICE SHALL BE INSULATED WITH A CITY APPROVED FREEZE PROTECTION BAG.
9. BURIED PIPE AND FITTINGS SHALL BE WRAPPED WITH 8 MIL. POLYETHYLENE OR APPROVED EQUAL.

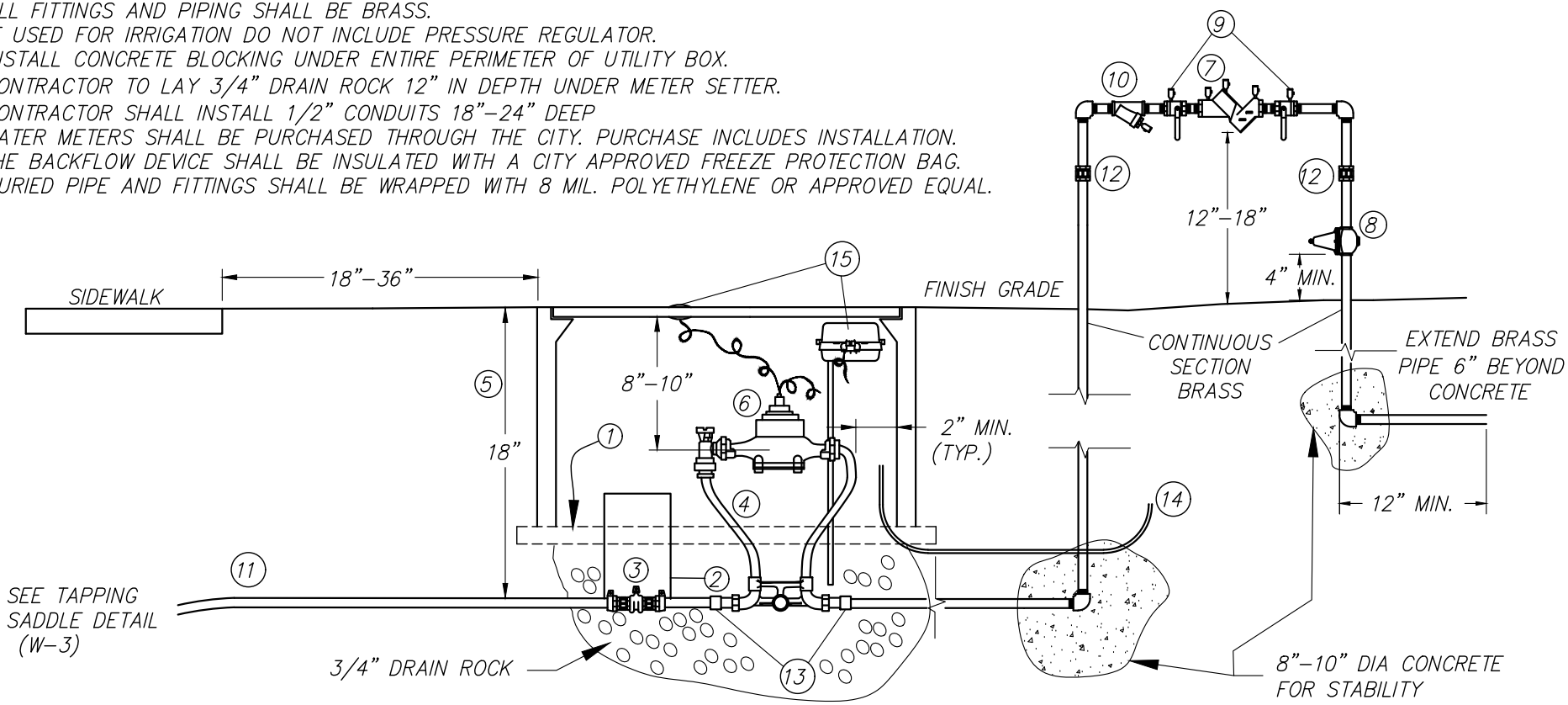

MATERIALS:

1. CONCRETE BLOCKING
2. 6" CONTINUOUS RISER STOCK
3. CURB STOP
4. METER RESETTER
5. B30 UTILITY BOX OR APPROVED EQUAL W/ BOLT DOWN LID
6. METER (PURCHASED THROUGH CITY)
7. R.P. TYPE BACKFLOW DEVICE
8. PRESSURE REGULATOR – ALL BRASS
9. BALL VALVES
10. BRASS STRAINER
11. COPPER PIPE – TYPE K COPPER (SIZE PER PLAN)
12. INSTALL (2) UNIONS NOT CONNECTED TO PRESSURE REGULATOR
13. METER SPUDS
14. 1/2" CONDUIT TO OTHER MANIFOLD BOXES
15. TOUCH PAD AND REMOTE UNIT TO BE PURCHASED BY DEVELOPER AND INSTALLED BY CITY

REVISIONS:	DATES:	APPROVED:
		CITY ENGINEER DATE

CITY OF LINCOLN
ENGINEERING DEPARTMENT

COMMERCIAL 1" SERVICE LINE

SCALE: NONE
DATE: SEPTEMBER 2019
DRAWN BY: C.G.

W-15

NOTES:

1. NO WATER IS TO BE DRAWN THROUGH THE BACKFLOW DEVICE UNTIL IT HAS BEEN TESTED BY THE CITY'S PUBLIC SERVICES.
2. CONTRACTOR SHALL LAY 3/4" DRAIN ROCK 12" DEPTH UNDER METER SETTER.
3. CONTRACTOR SHALL INSTALL 1/2" CONDUITS 18"–24" DEEP
4. WATER METERS SHALL BE PURCHASED THROUGH THE CITY. PURCHASE INCLUDES INSTALLATION.
5. BACKFLOW DEVICE SHALL BE INSULATED WITH A CITY APPROVED FREEZE PROTECTION BAG.
6. INSTALL CONCRETE BLOCKING UNDER ENTIRE PERIMETER OF UTILITY BOXES.
7. CURBSTOP SHALL BE BETWEEN 12" & 18" OF EASEMENT.
8. FITTINGS AND PIPING SHALL BE BRASS.
9. BURIED PIPE AND FITTINGS SHALL BE WRAPPED WITH 8 MIL. POLYETHYLENE OR APPROVED EQUAL.

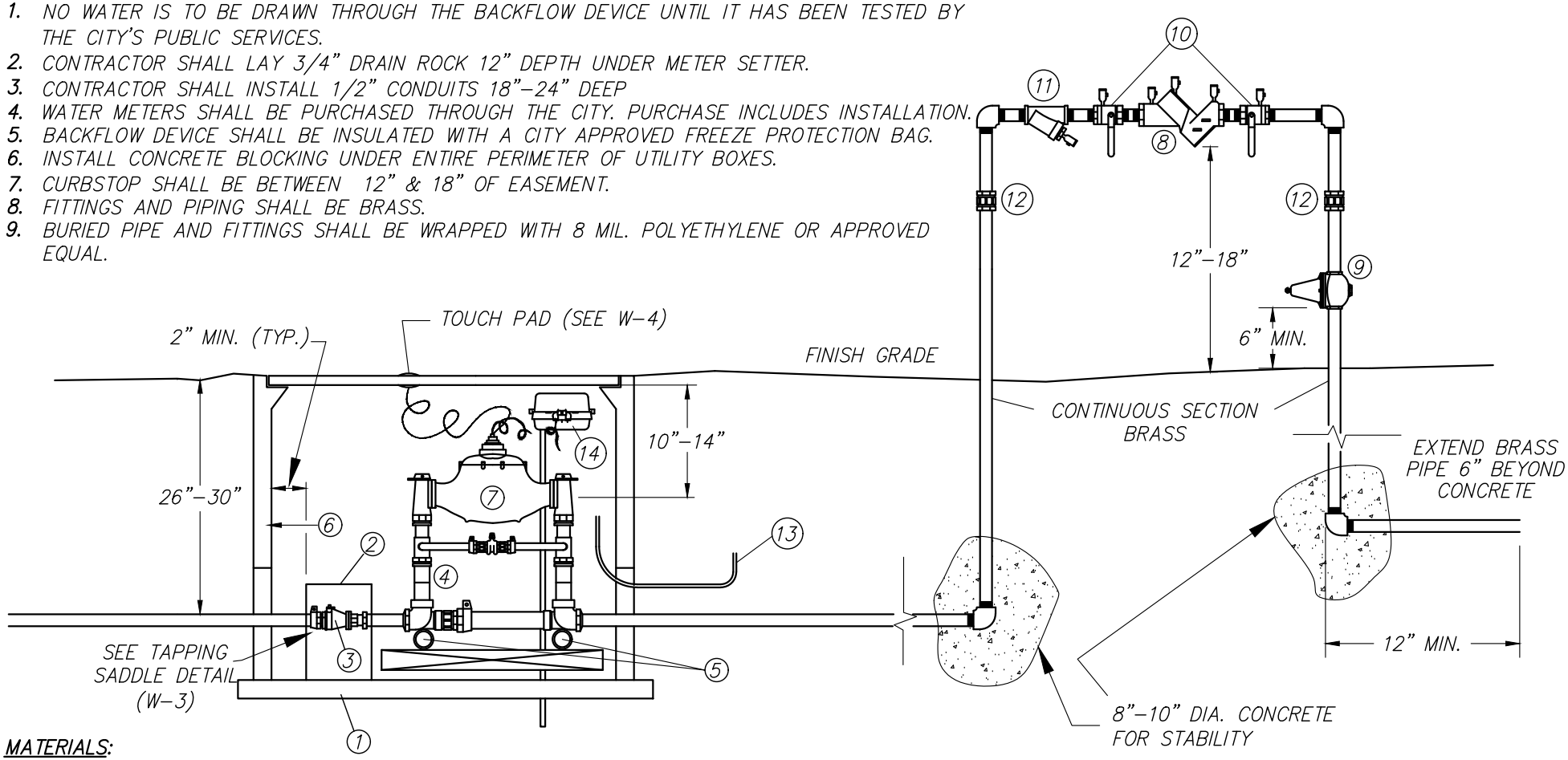

MATERIALS:

1. CONCRETE BLOCKING
2. 6" CONTINUOUS RISER STOCK
3. CURB STOP
4. 18" METER SETTER WITH HIGH BYPASS
5. RIGID SCH. 40 P.V.C. THROUGH EYES
6. B–40 UTILITY BOX W/TRAFFIC LID AND BOLT DOWN
7. METER (PURCHASED THROUGH CITY)
8. R.P TYPE BACKFLOW DEVICE
9. PRESSURE REGULATATOR
10. BALL VALVES
11. "Y" STRAINER
12. INSTALL (2) UNIONS NOT CONNECTED TO REGULATOR
13. 1/2" CONDUIT TO OTHER MANIFOLD BOXES
14. TOUCH PAD AND REMOTE UNIT TO BE PURCHASED BY DEVELOPER AND INSTALLED BY CITY.

CITY OF LINCOLN
ENGINEERING DEPARTMENT

COMMERCIAL 1 1/2" & 2" SERVICE LINE

REVISIONS:	DATES:	APPROVED:
		CITY ENGINEER DATE

SCALE: NONE
DATE: SEPTEMBER 2019
DRAWN BY: C.G.

W-16

NOTES:

1. NO WATER IS TO BE DRAWN THROUGH THE BACKFLOW DEVICE UNTIL IT HAS BEEN TESTED BY THE CITY'S PUBLIC SERVICES.
2. PIPE SHALL BE DUCTILE IRON. (FLANGED)
3. GATE VALVE SHALL BE RESILIENT SEAT.
4. SPOOLS UPSTEAM & DOWNSTREAM OF METER SHALL BE 5x THE PIPE DIAMETER.
5. INSTALL CONCRETE BLOCKING UNDER ENTIRE PERIMETER OF UTILITY BOX.
6. INSTALL 3/8" NON CASE HARDENED CHAIN W/LOCK BETWEEN VALVES.
7. CONTRACTOR SHALL SUPPLY CITY WITH 2 ROMAC GRIP RING CONFIGURATIONS FOR METER BYPASS AT TIME OF FINAL INSPECTION.
8. PIPE AND FITTINGS SHALL BE PURCHASED BY THE DEVELOPER.
9. THE BACKFLOW DEVICE SHALL BE INSULATED WITH A CITY APPROVED FREEZE PROTECTION BAG.

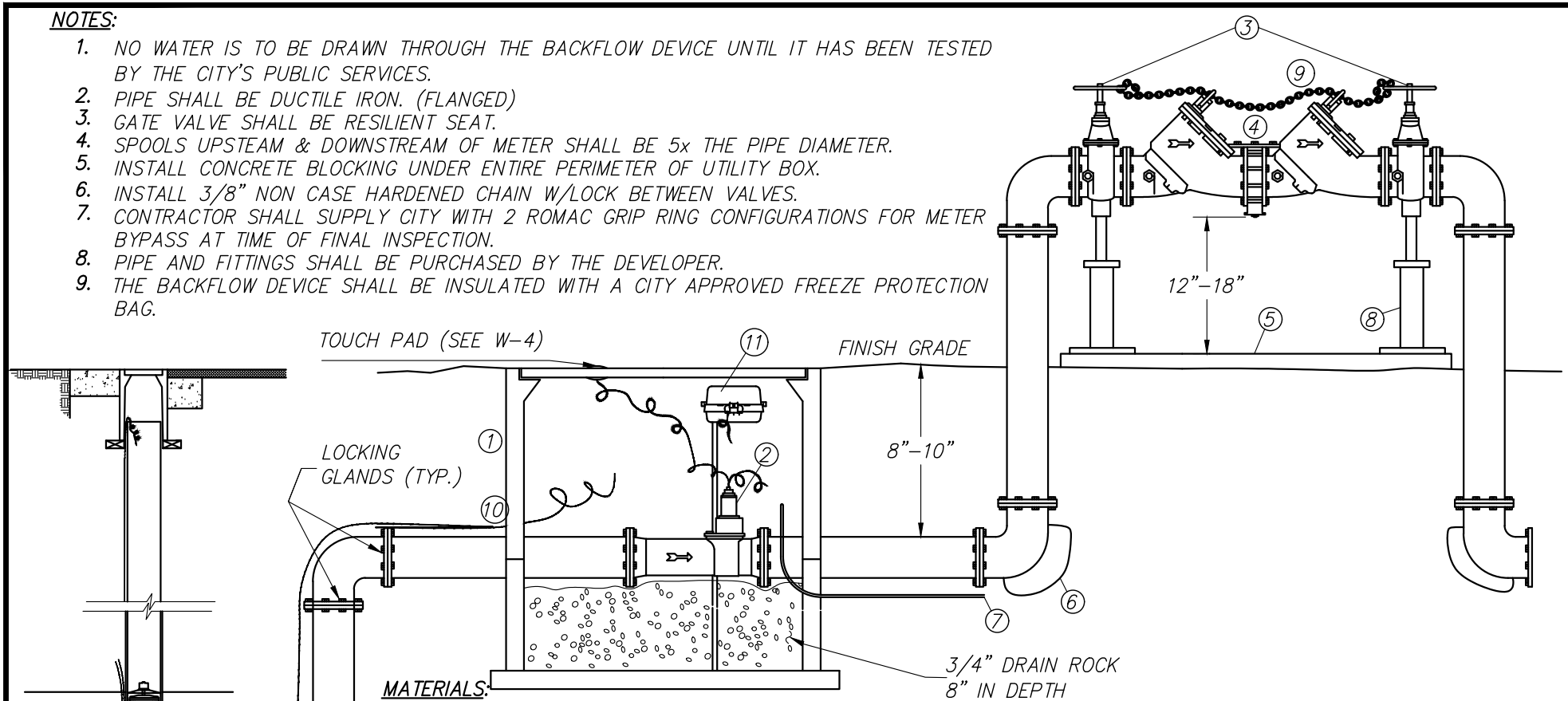

MATERIALS:

1. B40 UTILITY BOX W/STEEL LID OR APPROVED EQUAL - BOLT DOWN LID
2. TURBO METER WITH STRAINER (PURCHASED THROUGH CITY)
3. RESILIENT SEAT GATE VALVES
4. R.P. TYPE BACKFLOW DEVICE
5. 4" THICK REINFORCED CONCRETE SLAB
6. THRUST BLOCK (TYP.)
7. 1/2" CONDUIT TO OTHER MANIFOLD BOXES (OPTIONAL)
8. SUPPORT STANDS BOLTED INTO CONCRETE (TWO BOLTS MINIMUM)
9. 1/4" NON-CASE HARDENED CHAIN WITH LOCK
10. TRACING WIRE
11. REMOTE TRANSMITTER (SEE W-4)

CITY OF LINCOLN
ENGINEERING DEPARTMENT

COMMERCIAL 3" AND LARGER SERVICE

REVISIONS:	DATES:	APPROVED:
		CITY ENGINEER DATE

SCALE: NONE
DATE: SEPTEMBER 2019
DRAWN BY: C.G.

W-17

NOTES:

1. NO WATER IS TO BE DRAWN THROUGH THE BACKFLOW DEVICE UNTIL IT HAS BEEN TESTED BY THE CITY'S PUBLIC SERVICES.
2. CONTRACTOR SHALL LAY 3/4" DRAIN ROCK 12" DEEP UNDER METER SETTER.
3. CONTRACTOR SHALL INSTALL 1/2" CONDUITS 18" TO 24" DEEP.
4. WATER METERS SHALL BE PURCHASED THROUGH CITY. PURCAHSE INCLUDES INSTALLATION.
5. THE BACKFLOW DEVICE SHALL BE INSULATED WITH A CITY APPROVED FREEZE PROTECTION BAG.
6. INSTALL CONCRETE BLOCKING UNDER ENTIRE PERIMETER OF UTILITY BOX.
7. THERE SHALL BE NO FLOW ALTERING DEVICES 5x THE PIPE DIA. UPSTREAM AND DOWNSTREAM OF THE METER.
8. CURBSTOP SHALL BE BETWEEN 12" & 18" OF EASEMENT.
9. FITTINGS AND PIPING SHALL BE BRASS.
   BURIED PIPE & FITTINGS SHALL BE WRAPPED WITH 8 MIL. POLYETHYLENE APPROVED EQUAL.

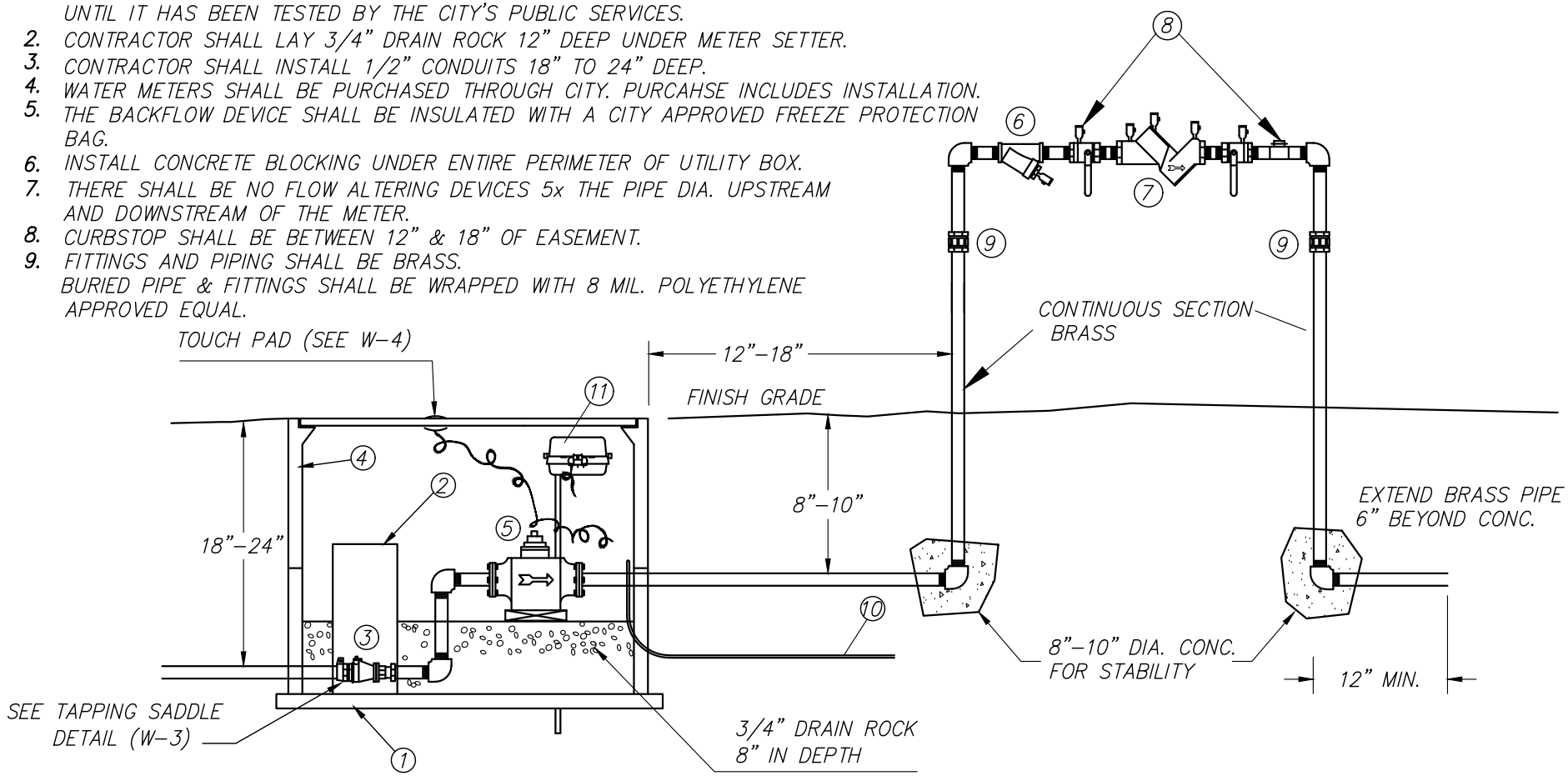

MATERIALS:

1. CONCRETE BLOCKING
2. 6" CONTINUOUS RISER STOCK
3. CURB STOP
4. B-40 UTILITY BOX WITH BOLT DOWN LID.
5. TURBO METER WITH STRAINER (PURCHASED THROUGH CITY)
6. "Y" STRAINER
7. R.P. TYPE BACKFLOW DEVICE
8. BALL VALVES
9. INSTALL (2) UNIONS
10. 1/2" CONDUIT TO OTHER MANIFOLD BOXES (OPTIONAL)
11. REMOTE TRANSMITTER (SEE DETAIL W-4)

CITY OF LINCOLN
ENGINEERING DEPARTMENT

COMMERCIAL 1 1/2" & 2" IRRIGATION SERVICE

REVISIONS:	DATES:	APPROVED:
		CITY ENGINEER DATE

SCALE: NONE
DATE: SEPTEMBER 2019
DRAWN BY: C.G.

W-18

PRIOR TO CONNECTION TO THE CITY MAIN, THE FOLLOWING CONDITIONS SHALL BE MET.

A. PASSED A PRESSURE TEST

B. PASSED A CHLORINE TEST

C. PASSED A BACTI TEST

D. APPROVAL BY THE CITY ENGINEER

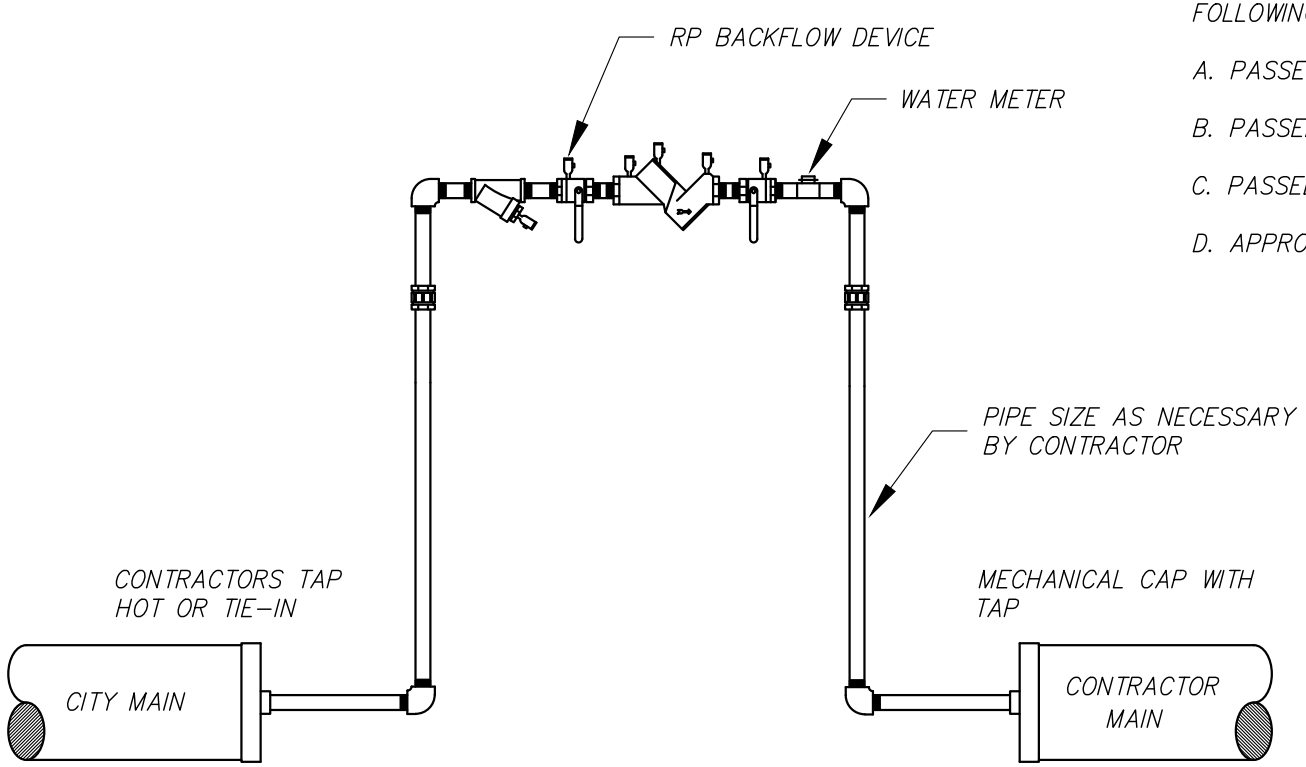

NOTES:

WATER SHALL ONLY BE DRAWN INTO THE CONTRACTORS MAIN THROUGH A CITY APPROVED RP TYPE BACKFLOW DEVICE.

FINAL SYSTEM COMPONENTS NECESSARY FOR TIE-IN SHALL BE PRE-CLORINATED AND PRE-FLUSHED IN THE PRESENCE OF CITY INSPECTOR.

UPON COMPLETION OF THE CONDITIONS NOTED ABOVE THE CONNECTION TO THE CITY SYSTEM MAY BE MADE. THE CITY SHALL BE NOTIFIED 48 HOURS PRIOR TO THE START OF WORK.

CITY OF LINCOLN
ENGINEERING DEPARTMENT

CONSTRUCTION WATER CONNECTION

REVISIONS:	DATES:	APPROVED:
		CITY ENGINEER DATE

SCALE: NONE
DATE: SEPTEMBER 2019
DRAWN BY: C.G.

W-19

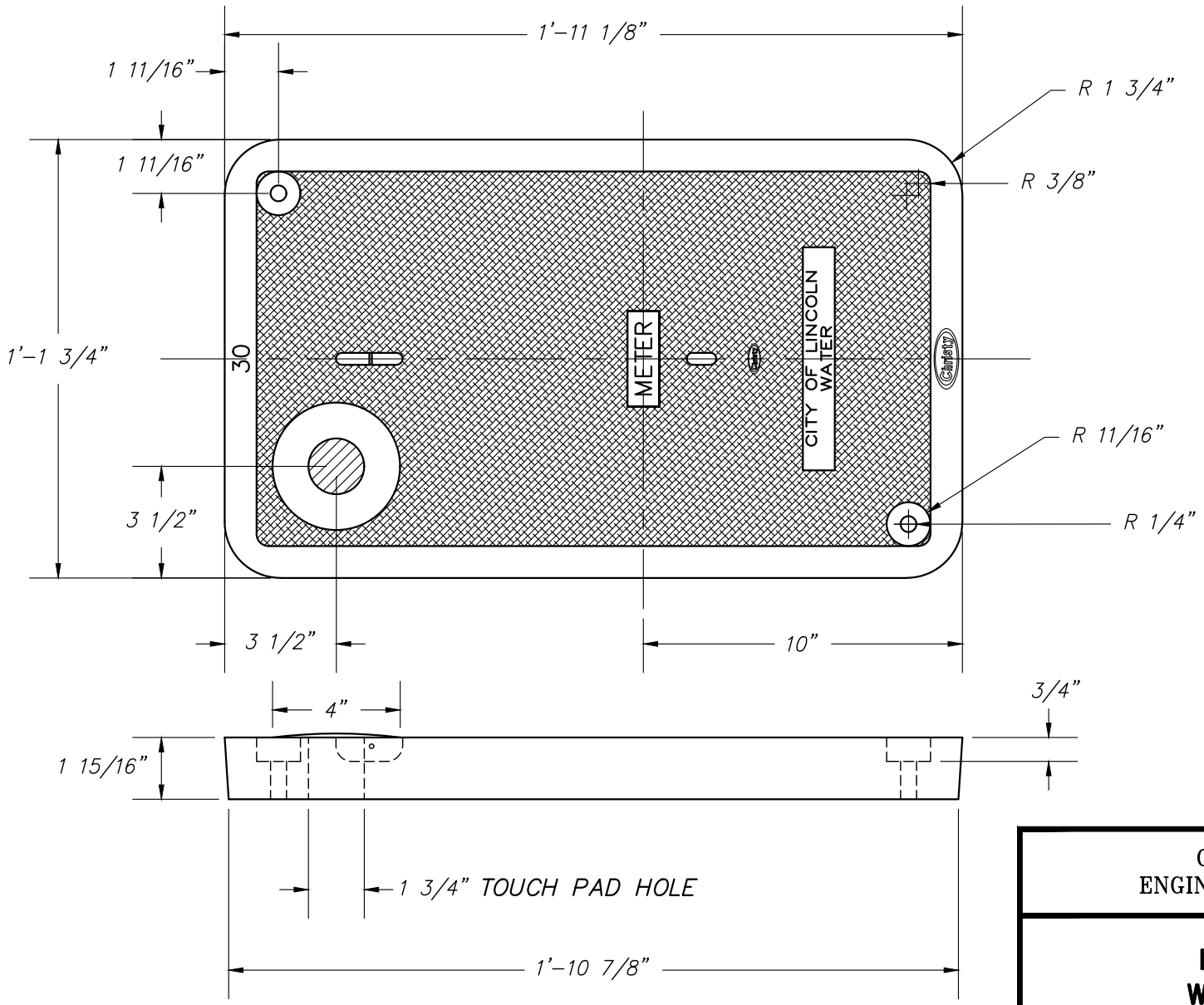

CITY OF LINCOLN
ENGINEERING DEPARTMENT

METER COVER
WATER SERVICE

REVISIONS:	DATES:	APPROVED:
		CITY ENGINEER DATE

SCALE: NONE
DATE: SEPTEMBER 2019
DRAWN BY: C.G.

W-20

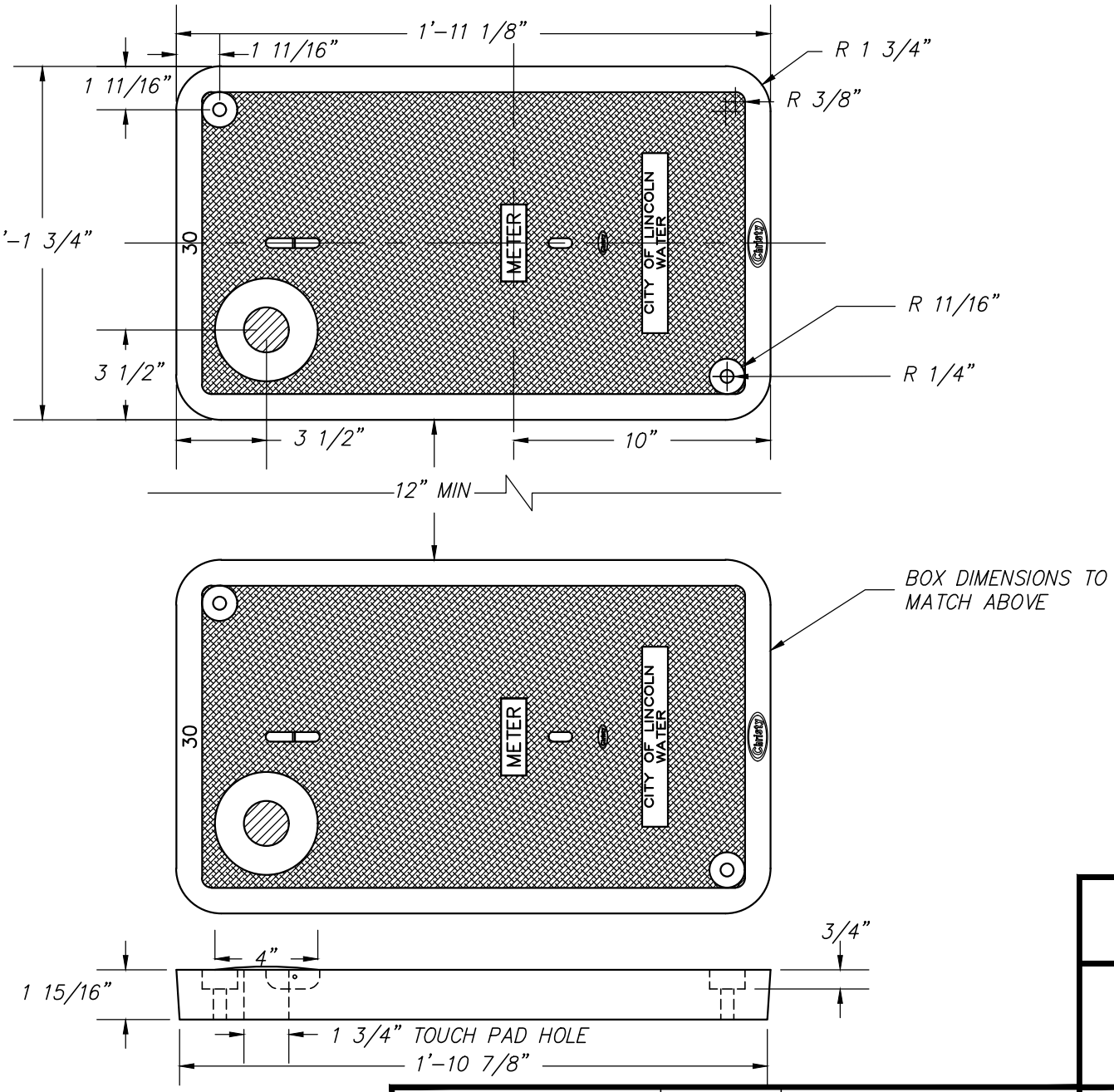

CITY OF LINCOLN
ENGINEERING DEPARTMENT

DOUBLE METER COVER
WATER SERVICE

REVISIONS:	DATES:	APPROVED:
		CITY ENGINEER DATE

SCALE: NONE
DATE: SEPTEMBER 2019
DRAWN BY: C.G.

W-21

[THIS PAGE INTENTIONALLY LEFT BLANK]

SECTION 5

SANITARY SEWER SYSTEM (SS)

5-1 General SS-1
5-2 Connection to Existing Facilities SS-2
A. System Tap SS-2
B. Existing Sewer Stubs SS-2
5-3 Construction Staking SS-3
5-4 Trench Work SS-3
A. Existing Pavement SS-3
B. Water in Trench SS-3
C. Unsuitable Trench Bottom SS-4
D. Steel Trench Plates SS-4
E. Temporary Resurfacing SS-5
F. Open Trench SS-5
G. Trench Width SS-5
5-5 Pipe Bedding SS-5
A. Pipe Support SS-5
B. Saturated Trench SS-5
C. Bell Holes SS-5
5-6 Concrete Cradles, Arches, & Encasements SS-6
A. Pipe Support SS-6
B. Concrete SS-6
5-7 Pipe Installation SS-6
A. Pipe Cleanliness SS-6
B. Placing Pipe SS-6
C. Joining Pipe SS-6
D. Covering Pipe SS-6
E. Manufacturer's Recommendations SS-6
F. Vitrified Clay Pipe (VCP) Installation SS-7
G. Polyvinyl Chloride (PVC) Installation SS-7
H. High Density Polyethylene (HDPE) Installation SS-7
I. Ductile Iron Pipe (DIP) Installation SS-7
J. Transitions between VCP and PVC or HDPE SS-7
K. Boring SS-7
1. Excavation SS-7
2. Installation of Conductor SS-7
3. Placing Pipe in Conductor SS-8
4. Backfill of Voids SS-8
5. Ground Loss SS-8
5-8 Force Main Installation SS-8
A. Force Main Standards SS-8
B. Force Main Pipe SS-9
5-9 Manhole Installation SS-9
A. Top of Manhole in Pavement SS-9
B. Top of Manhole Off-Site SS-9
C. Top of Manhole Landscape Area SS-9
D. VCP Entering Manhole SS-9
E. Lids SS-9
F. Existing SS-10
G. Bases SS-10
H. Adjusting Manholes SS-10

I. Joints SS-10
J. Ladder Steps SS-11
K. Epoxy Manhole SS-11
L. Metering Manhole SS-12
1. Packaged Manhole SS-12
M. Manhole Structure Backfill SS-12
5-10 Lateral Installation SS-13
5-11 Pipe Backfill QA/QC SS-13
A. Performance Based QA/QC (Non-Testable Materials) SS-13
B. Design Based QA/QC (Testable Materials) SS-14
C. Trench Backfill Material SS-14
D. Pipe Zone Backfill SS-15
E. Compaction Test Methods SS-15
F. Testing Frequencies SS-15
G. Warning Tape SS-16
H. Marking in Unpaved Areas SS-16
5-12 Testing of Installed Improvements SS-16
A. Sewer Mains and Services SS-16
1. Air Pressure Test SS-17
2. Closed Circuit TV Inspection SS-17
B. Manholes SS-18
5-13 Punch List Process SS-18
5-14 Repairing Installed Improvements SS-19
A. Repairing Vitrified Clay Pipe SS-19
5-15 Materials SS-19
A. Approved Equal SS-19
1. Product SS-19
2. Contact SS-19
3. Reference SS-19
B. Unapproved Materials SS-20
C. Backfill Material SS-20
D. Sewer Main and Service Laterals SS-20
E. Cleanout SS-20
F. Manholes SS-20
1. Barrels, Cones and Lids SS-20
a. 48-inch Manhole Material SS-20
b. 60-inch Manhole Material SS-20
c. 72-inch Manhole Material SS-20
2. Manhole Frame and Cover SS-21
3. Precast Manhole Base SS-21
G. Appurtenances SS-21
1. Air Release Valve SS-21
2. Clay to Concrete Sealant SS-21
3. Cleanout Caps SS-21
4. Couplings SS-21
5. Flange Gaskets SS-21
6. Joint Sealing Compound SS-21
7. Locations Stakes SS-21
8. Mortar SS-21
9. Silicone SS-21
10. Sulfide Protection SS-21
11. Wastewater Marking Tape SS-21
12. Parshall Flumes SS-21
5-16 Sanitary Sewer Details SS-22

SECTION 5

SANITARY SEWER SYSTEM (SS)

5-1 **General** – All improvements within the City of Lincoln will be approved and permitted by the City, and will conform to the City of Lincoln Design Criteria & Procedures Manual. All sewer pipe, fittings, and related appurtenances will be installed in strict accordance with the approved project improvement plans, these Public Facilities Improvement Standards, certain sections of the latest editions of the Caltrans Standard Plans and Caltrans Standard Specifications, and as recommended by the material manufacturer.

Should conflicts arise between documents, the approved project improvement plans and specifications will govern over these Public Facilities Improvement Standards. These Public Facilities Improvement Standards will govern over the Caltrans Standard Specifications. In the event of conflict between applicable documents and/or plans, the most restrictive will prevail.

The manufacturer's guideline for all materials to be used on the project will be present at the construction site at all times.

The Developers and Contractors will comply with all applicable City, County, State, and Federal laws and regulations relating to construction of the improvements as required.

If the City Engineer determines that any work on private or public property constitutes a hazard to the health, safety, or welfare of the public; endangers property; adversely affects the safety, use or stability of adjacent property; an overhead or underground utility, or a public way, watercourse or drainage channel; or could adversely affect the air quality; or the water quality of any water bodies or water courses; the City Engineer may issue a stop work notice to the owner of the property upon which the condition is located, or other person or agent in control of such property. Upon receipt of such stop work notice, the recipient will, within the period specified therein, stop all work, obtain necessary permits and conform to the requirements identified in the stop work notice. The City Engineer may require the submission of plans or other reports, detailed construction recommendations, studies, or other engineering data prior to and in connection with any corrective or proposed work or activity.

All improvements within the City of Lincoln will be performed by a contractor licensed in accordance with the California Contractors State License Law, Business and Professions Code Section 7000 et seq.

All persons, firms, partnerships, or corporations doing business of any nature in the City of Lincoln will have a current Business License as stated in Chapter 5.04-License Tax, City of Lincoln Municipal Code. This includes developers, Engineers, and contractors.

Refer to the City of Lincoln's Design Criteria & Procedures Manual for design information.

All projects will be in compliance with the State Water Quality requirements for Erosion and Sedimentation Control at all times.

5-2 **Connection to Existing Facilities** – Connection to existing City sewer facilities may be made upon approval of City Engineer.

A. System Tap – The City Engineer has the option of making any system tap required on the plans. Should the City Engineer elect to perform the tap, the Contractor will pay for such work. The City will determine the cost of work on a time and materials reimbursement basis or by the fee(s) as established in the City's fee ordinance. The Contractor will be responsible for the following tasks associated with the tap, and as determined by the City Engineer:

1. Coordinating the work requested with the Sewer Division and the City Engineer. This will include discussions on provisions for materials and equipment required to complete the work.

2. Acquire an encroachment permit from the City Engineer as required.

3. Provide traffic control as required by the City Engineer.

4. Excavate the work area, as agreed upon by the City Engineer.

5. Provide sheeting/shoring as required to provide a safe and workable area.

6. Provide lighting as required if the tap is to be performed at night.

7. Backfill and compact the excavations(s) upon tap completion.

B. Existing Sewer Stubs – The Contractor will excavate and connect to an existing sewer stub in the presence of the City Engineer or his/her designated representative.

5-3 **Construction Staking** – The sewer main will be staked prior to installation. Such staking will provide the station and offset to the sewer main, as well as the cut to the nearest tenth of a foot, 0.1-foot. Stakes will be provided at a minimum of every 50-feet in tangent sections and every 25-feet in curved sections, and every 10-feet in vertical curve sections.

5-4 **Trench Work** – Earthwork required to construct sanitary sewer facilities will be performed to the lines and grades shown on the approved project improvement plans. At all times, the trench and work area surrounding the trench will be kept in a safe manner to adequately protect the public and the workers. The person designated as the project "superintendent" will be onsite during all work activity. The specified trench width will be maintained to a height of one-foot over the top of the pipe for all trench wall geometry cross-sections including: vertical walls steeped vertical walls, V-walls, and combined vertical-V-walls.

Prior to placing both trench backfill materials and pipes on the trench bottom subgrade surface, the trench bottom will be: relatively free of loose materials, have a relatively smooth appearance, have a relatively constant grade, and be firm and relatively unyielding.

The location of cut-off walls shown on the plans may be adjusted in the field if directed by the on-site geotechnical engineer and/or the City Engineer.

Refer to Detail SS-1 and Section 5-11 of these Public Facilities Improvement Standards Section for additional information on trench materials.

A. Existing Pavement – When the trench is in an existing surfaced area, the pavement will be sawed or scored and broken ahead of the trenching operations. The pavement will be cut accurately on neat and parallel lines. Before the final asphalt concrete patch is placed, the edges of the asphalt concrete will be re-sawcut at least one-foot wider than the width of the trench ("T trench") to create a smooth parallel edge (see Standard Detail H-25). All cuts in Portland cement concrete pavements will be sawcut with approved equipment.

B. Water in the Trench – When water is encountered in the trench, the owner's/developer's geotechnical consultant will be contacted by the contractor to provide input to the City Engineer. The City requires that a dewatering work plan be prepared and submitted for review prior to implementation in areas where dewatering will be anticipated. The trench will be kept dry in a manner approved by the City Engineer until placement of the approved bedding material, laying and jointing of the pipe, and placement of the shading material has been completed and approved.

The City will consider, on a case-by-case basis, the use of conventional, in-trench, sump-dewatering methods provided that the trench is backfilled with washed, crushed rock or equivalent to at least a height of 3-feet higher than the local ground water table or perched water whichever is at a higher elevation. The crushed rock may require wrapping with a geotextile filter fabric as determined by the owner's/developer's geotechnical consultant or required by City Engineer. Installation of ground water monitoring wells can be used to determine the elevation of the water table and/or perched groundwater.

The owner's/developer's geotechnical consultant should develop a dewatering work plan for review and approval by the City Engineer or his/her designated representative prior to implementation. The City requires a dewatering system be designed and implemented in all areas where trenches will be excavated and native backfill will be placed below the local ground water table and/or perched ground water. Installation of ground water monitoring wells can be used to determine the elevation of the water table and/or perched ground water. The dewatering system may include but is not limited to: drive well point screens and vacuum extraction systems, or other dewatering methods. Use of in-trench sumps will not be allowed as the sole dewatering method.

The manner employed to dispose of water pumped from an excavation will be subject to the approval of the City Engineer and will conform to all water pollution constraints of the City and other agencies. Ground water pumped from the trench will be disposed of in a manner to not cause injury to public or private property, or to constitute a nuisance or menace to the public.

C. **Unsuitable Trench Bottom** - If in the opinion of the owner's/developer's geotechnical consultant, or the City Engineer, the bottom of the trench is soft, yielding, or otherwise unsuitable as a foundation for the pipe, the unsuitable material will be removed to the depth necessary to provide a stable and satisfactory foundation. Three-quarter-inch (3/4") crushed rock will be placed in the trench to provide a stable foundation. The rock is in addition to the required pipe bedding used in the pipe zone. All rock will be wrapped with geotextile fabric (see standard detail SS-1, Type "C" Material).

D. **Steel Trench Plates** - Steel trench plates will not be used over open trench areas without the approval of the City Engineer. All steel plates will be adequately restrained to eliminate shifting. Trench plates do not eliminate the need for shoring when required. Temporary asphaltic plant mix ("cut-back") at least one-foot in width will be used for a transition on each edge of the plate. "Steel Plate Ahead" signs (W8-24) will be installed 200-feet on each side before the steel plate. The sign will only be mounted to an operable, lighted barricade for a maximum of 24-hours. The sign will be mounted to a 4-inch x 4-inch post if the placement of steel trench plates will exceed 24-hours.

E. Temporary Surfacing - In roadway areas, a temporary asphalt plant mix "cut-back" surface not less than 2-inches in thickness may be placed immediately after the top backfill has been completed and compacted. This temporary surface will be maintained at a level surface until removal. The temporary surfacing material will be removed just prior to placing the permanent surface material.

F. Open Trench - The trench will be in a safe condition at all times.

1. In roadway areas and locations accessible to the public, trenches will be excavated only as far in advance of pipe laying as can be backfilled in the same day. In addition, the maximum total length of open trench will be no more than 50-feet ahead of the pipe laying operation, or 50-feet behind the pipe laying operation. A trench in an existing roadway that is not to be regraded is defined as "open" until backfilled to existing grade.

2. In new developments and areas not accessible to the public, trenches will be excavated only as far in advance of pipe laying as can be backfilled in the same day. In addition, the maximum total length of open trench will be no more than 300-feet ahead of the pipe laying operation, or 200-feet behind the pipe laying operation. A trench in an existing roadway that is not to be regraded is defined as "open" until backfilled to existing grade.

G. Trench Width - The trench bottom width will be 12-inches to 24-inches greater than the diameter of the pipe and will extend to 24-inches above top of pipe and will comply with Improvement Standard Detail SS-1 or as approved by the City Engineer.

5-5 PIPE BEDDING - Conform to Standard Detail SS-1 and the following:

A. Pipe Support - Bedding will provide uniform and continuous support along the barrel of the pipe. The minimum depth of bedding material will be provided under the bell. Blocking of the pipe is not permitted. Loose material will be removed from the trench bottom and replaced with imported material.

B. Saturated Trench - Where a saturated trench condition is encountered, the trench wall and pipe will be lined with a geotextile fabric as shown on Standard Detail SS-1, and to the satisfaction of the City Engineer.

C. Bell Holes - Bell holes will be excavated per the manufacturer's recommendations. The minimum depth of bedding material will be provided under the bell. Care will be taken to ensure that the bell hole is no larger than necessary to accomplish proper joint assembly.

5-6 **CONCRETE CRADLES, ARCHES & ENCASEMENTS** - Concrete cradles, arches and encasements will only be allowed at the discretion of the City Engineer and will conform to the Standard Details and these improvement standards:

A. Pipe Support - The pipe will be placed in proper position on temporary supports consisting of concrete block or bricks. When necessary, the pipe will be rigidly anchored or weighted to prevent flotation when the concrete is placed.

B. Concrete - Concrete for cradles, arches or encasements will be placed uniformly along the pipe. Concrete placed beneath the pipe will be sufficiently workable to fill the voids without excessive vibration. The concrete will be allowed to cure and remain undisturbed for 24-hours prior to backfill and compaction of the trench. Water will not be permitted to enter, seep, or run onto the concrete while curing.

5-7 **PIPE INSTALLATION** - The sewer system outfall(s) will be plugged and remain plugged until final acceptance. Sewer pipe will be installed in accordance with the following provisions:

A. Pipe Cleanliness - The Contractor will keep the pipe interior free from foreign materials and in a clean and sanitary condition until acceptance by the City. At times when pipe laying is not in progress, the open pipe end will be sealed with a tight cap or plug to prevent foreign matter from entering the pipe. Provisions will apply to the lunch-hour as well as overnight.

B. Placing Pipe - Pipe will be lowered into the trench and carefully placed on the bedding material with the use of lifting equipment and nylon straps. Chains are not permitted. The pipe will be laid carefully to the lines and grades shown without grade breaks, unless designed with such. At the discretion of the City Engineer or his/her representative, any pipe damaged during placement will be removed. If field conditions exist such that the pipe may not be laid to the specified grade, the approved plans will require revisions, approved by the City Engineer, prior to proceeding with construction.

C. Joining Pipe - Pipe sections will be closely jointed to form a smooth flowline. Care will be taken in placing the pipe and making field joints.

D. Covering Pipe - Improvements installed without proper inspection will be exposed and inspected as required by the City Engineer.

E. Manufacturer's Recommendations – All installations will follow manufacturer's recommendations unless otherwise noted on the approved plans. The manufacturer's installation guide will be on the job site at all times.

F. **Vitrified Clay Pipe (VCP) Installation** - Pipe laying will proceed upgrade with the bell end of the pipe placed upstream, and will follow manufacturer's guidelines and the National Clay Pipe Institute (NCPI) Vitrified Clay Pipe Engineering Manual, ASTM C12 and the NCPI Installation and Inspection Handbook for installation.

G. **Polyvinylchloride Pipe (PVC) Installation** – Pipe laying will proceed upgrade with the bell end of the pipe placed upstream and will follow manufacturer's guidelines and ASTM standards. See Section 5-8 for details on force main installation.

H. **Ductile Iron Pipe (DIP) Installation** – DIP may be used as an upgraded pipe material when Division of Drinking Water separation requirements cannot be met. DIP for sewer applications shall be coated on the inside with "Protecto 401" ceramic epoxy, (or approved equal) unless otherwise specified on the approved plans. DIP shall be encased in polyethylene as specified in the standard for "Polyethylene Encasement for Ductile Iron Piping for Water and Other Liquids" (ANSI/AWWA C-105/A21.5). DIP sewer systems shall be constructed per the manufacturer's recommendations.

I. **High Density Polyethylene (HDPE) Installation** – Pipe laying and butt fused joint welding will follow manufacturer's guidelines and ASTM standards. See Section 5-8 for details on force main installation.

J. **Transitions between VCP and DIP, PVC or HDPE** - When specified on the approved Improvement Plans transitions between VCP and DIP, PVC or HDPE shall be made using a manhole.

K. **Boring -** The equipment, method and sequence of operation and conductor pipe grades shall be approved by City Engineer. A minimum of 72-hours' notice shall be given prior to the start of work.

1. **Excavation -** Excavation for the boring operation shall be the minimum necessary to satisfactorily complete the work. Bracing and shoring shall be adequate to protect workers and any adjacent structure or roadbed.

2. **Installation of Conductor** - The conductor shall closely follow the boring operation. The bored hole shall not be more than 0.10-foot larger in diameter than the outside diameter of the conductor. Guide rails shall be accurately set to line and grade to ensure installation of the conductor within allowable limits. The conductor diameter shall be sufficient to allow adjustment of line and grade of the conducted pipe to meet allowable tolerances and to allow sand to be placed between the conductor and the conducted pipe.

The inside diameter of the conductor shall be a minimum of 10- inches larger than the outside diameter of the conducted bell pipe or joint, as approved by City Engineer. A minimum of 4- inches of clearance shall be required between the conducted pipe and the casing, taking the skids into consideration.

3. **Placing Pipe in Conductor** - Conductor pipe shall be supported by a minimum of three sets of synthetic skids per stick of pipe, or as required by City Engineer. Pipe sections will be joined outside of the conductor. The skids and casing entrance will be lubricated prior to sliding the conducted pipe into place. The height of the skids may be adjusted to meet specified grades.

4. **Backfill of Voids** - The annular space between the conducted pipe and conductor will be completely filled with clean, dry, silica sand, blown into place. The method of placing sand in the void will be approved by City Engineer. Both ends of the casing will be plugged with non-shrink grout a minimum of 12-inches into the casing.

5. **Ground Loss** - Whenever, in the opinion of the City Engineer or owner's/developer's geotechnical consultant, the nature of the soil indicates the likelihood of ground loss which would result in a greater space between the outer surface of the conductor than allowed, the Contractor will take immediate steps to prevent such occurrences by installing a jacking head extending at least 18-inches from the leading edge of the conductor.

   The jacking head will cover the upper two-thirds of the conductor and project not more than ½-inch beyond the conductor outer surface. Excavation will not be made in advance of the jacking head. Voids greater than allowable will be filled with sand, soil cement, grout, or as approved by City Engineer. Where voids are suspected, the owner's/developer's geotechnical or engineering consultant may direct the Contractor to drill the conductor, to pressure inject grout to refusal and repair the drilled hole. Grouting pressure will not exceed 50-psi at the nozzle.

5-8 **FORCE MAIN INSTALLATION** – Force mains will be installed in accordance with these improvement standards:

A. Force Main Standards - The force main will be constructed and tested in accordance with AWWA standards and the water pressure pipe standards established in Section 4, Domestic Water Supply System, of these Improvement Standards, with these deviations:

1. The force main will not require disinfecting or water quality testing. The main shall be pre-flushed and flushed again with a properly sized "pig" after the pressure test. Flushing shall occur in the presence of the City Engineer.

2. Backfill tape shall be 12-inch wide green plastic stating "Buried Sewer Force Main".

B. Force Main Pipe – The force main will be constructed of the following materials:

1. Force Mains less than 6” will be constructed of PVC Schedule 80.

2. Force mains 6” or larger will be constructed of High Density Polyethylene (HDPE) with butt-fused joints and wall thickness of not less than DR11.

Any alternate force main pipe not listed in this section must be approved by the City Engineer prior to installation.

5-9 MANHOLE INSTALLATION - Manholes will be installed in accordance with the Improvement Standard Details and these improvement standards:

A. Top of Manhole in Pavement - Frames and covers will be set flush with finish grade, unless otherwise noted on the approved plans. Per the Standard Details, a 12-inch deep by 12-inch wide concrete collar with a #4 rebar ring will be placed around the casting, covered by 2-inches of asphalt concrete paving.

B. Top of Manhole Off-Site - Manholes placed in off-site, unimproved areas will be constructed with the top of the casting cover a minimum of 12-inches above the final surrounding grade. A minimum 12-inch wide Class "A” concrete collar with a #4 rebar ring will be constructed around the casting and 6-inches below finish grade.

C. Top of Manhole Landscape Area - Manholes placed in landscape areas adjacent to City improvements will be constructed with the top of the casting cover a minimum of 6-inches above the final surrounding grade. A minimum 12-inch wide Class “A” concrete collar with a #4 rebar ring will be constructed around the casting and 6-inches below finish grade.

D. VCP Entering Manhole - VCP pipe entering a sewer manhole will have a flex joint at the manhole base. A flex joint consists of a bell and spigot joint at the manhole and a bell and spigot joint located 12-inches to 24-inches outside of the manhole.

E. Lids - Manhole lids and castings will be 24-inch diameter with or without bolt-down capability with two cast-in-place bars and a gas detector probe hole. Lids will have no pick holes. Lids will be bolted when a manhole is constructed outside a paved area or as specified on the approved plans.

F. **Existing** - Sewer mains or lateral services entering an existing manhole will be core drilled, without exception. Any work on an existing sewer manhole will require the manhole to pass a vacuum test as described in section 5-12 of these Improvement Standards. The work completed will remain exposed until the vacuum test has been accepted by the City Engineer.

G. **Bases** - Concrete manhole bases will be pre-cast unless approved by the City Engineer. Pre-cast bases will conform to the Materials section of these Improvement Standards. Unused channels will be grouted with mortar to form a smooth bottom. Cast-in-place manholes will be constructed in accordance with the details provided in these Improvement Standards:

1. Concrete will be vibrated to reduce porosity for vacuum testing. Concrete will be Class A, 6-sack mix.

2. Belled pipes set in the manhole base wall will be set flush with the exterior of the wall. The "speed-seal" on the spigot end will be cut off prior to setting.

3. Unless specified on the approved plans, there will be a 0.10-foot drop constructed across the manhole base.

4. The top of the base will be formed to accept the first barrel section. Wet setting is not permitted. RAM-NEK® will be installed on this first joint after the Director of Public Works/City Engineer has approved the manhole base for stacking.

5. The concrete will cure a minimum of 24-hours before stacking the barrel sections.

6. The bedding will consist of a minimum of 4-inches of compacted crushed rock placed on a geotextile isolation layer.

7. Flow through manholes will have the pipe laid continuously as a whole pipe with flex joints and a minimum 0.1-foot drop, or as approved. After the initial 24-hour curing period, the top half of the pipe will be carefully cut off without cracking the bottom. The sides will be mortared smooth.

H. **Adjusting Manholes** - The manhole neck and frame will be adjusted to grade. Use of metal grade rings is not permitted. The finished manhole will conform to Standard Detail SS-4, or as approved by the City Engineer.

I. **Joints** - All joints between the frame, grade rings, dome, barrels and base will be sealed with non-shrink mortar, or an approved plastic sealing material. Inside the manhole, all joints where the sealing material is not flush with the inside wall will be grouted with non-shrink mortar and finished/wet-brushed.

J. Ladder Steps - Manhole steps shall be installed per CalOSHA Title 8. Steps shall not exceed 14-inches or less than 10-inches between the step surfaces of the rungs and shall be uniform through the length of the ladder.

K. Epoxy Manholes – Sewer manholes in force mains, lift stations or as required by the City Engineer, requiring epoxy coating will first pass a vacuum test and will then be constructed as follows:

1. The exterior of the manhole will be coated with an asphaltic material and wrapped in 8-mil polyethylene prior to backfilling.

2. All voids and imperfections in the interior of the manhole will be mortared or "sacked" smooth with a cement paste composed of 50% Portland cement and 50% sand. The mortar mixture will be manually worked into the dampened surface with sufficient pressure to completely fill voids and imperfections. The surface will then be finished smooth. This process will be continued until the entire manhole surface (base, barrel, cone, neck and joints) is smooth and free of imperfections.

Upon receiving City Engineer approval of the sacking, the outlet channel(s) of the manhole to be epoxied and the first upstream manhole will be mechanically plugged to prevent water flow. The newly sacked manhole will cure for a period of 28-days.

3. The epoxy coating may be applied after the 28-day curing period has ended. An accepted method of epoxy application is as follows:

a. Mask off the metal frame.

b. Sandblast the interior concrete surfaces of the sewer manhole.

c. Apply a sealer/primer and allow to cure per the manufacturer's recommendations. Application may be withheld if, in the opinion of the City Engineer, the walls of the manhole exceed the recommended moisture content.

d. Apply an approved epoxy to obtain a minimum thickness of 80 mils and allow to cure per the manufacturer's recommendations.

e. Submit a report to verify the thickness and adherence of the coating by coring samples, to the satisfaction of the City Engineer.

f. Repair the sampled areas and allow the repairs to cure.

g. Use the Holiday Detection Test ("Spark test") on the entire epoxy surface area. The electrode will provide a minimum of 10,000 volts. Areas failing the spark test will be removed, repaired and retested.

h. After approval from the City Engineer, remove the masking from the metal frame and use "Sikaflex®" (or approved equal) sealant to caulk the transition joint between the epoxy coating and the metal frame.

i. Use "Sikaflex®" (or approved equal) sealant at the concrete VCP Interface.

j. Remove the plugs.

L. Metering Manhole – Metering manholes will be a Plasti Fab Fiberglass Packaged Metering Manhole with a Parshall flume. Parshall flume size will be approved by the City Engineer prior to installation.

1. Packaged Unit – Packaged metering manhole will be a completely integral unit consisting of: a corrosion resistant fiberglass reinforced plastic manhole with sealed fiberglass bottom, concentric manway opening, fiberglass access ladder, metering flume and accessories as required.

Packaged metering manhole concentric manway opening shall be designed to withstand a 16,000 lb. vertical dynamic wheel load (H-20), plus lateral forces from earth loading, ground water and frozen soil. The manhole opening shall be a 5' barrel with 36" opening; manway for use with a cast iron cover, suitable for H-20 highway loading.

The Packaged Metering manhole will be installed in accordance with the engineer's specifications and local codes and in a manner consistent with the installation instructions and recommendations of the manufacturer.

M. Manhole Structure Backfill – These notes and Detail SS-1A apply unless noted otherwise on the approved project improvement plans:

1. Only Caltrans Class 2 Aggregate (AB) Rock will be used as backfill to a minimum horizontal distance of 5-feet around all manhole structures constructed within the City right-of-way. The Caltrans Class 2 AB Rock will extend vertically upwards from the pipe zone to the overlying asphalt concrete (AC) pavement layer. Manholes installed at a depth greater than 5-feet will be backfilled with Type "E" Material to a depth of 5-feet below finished grade and to a horizontal distance of 5 feet around the manhole. Backfill between the Type E Material and roadway structural section will be Caltrans Class 2 Aggregate Base as described above.

2. The manhole structure backfill will be moisture conditioned to within 3 percentage points of the ASTM D1557 optimum moisture content, placed in maximum 12-inch-thick loose vertical lifts (layers), and then compacted with a walk behind jumping jack type compactor.

3. The manhole structure trench backfill will be tested in place to determine its moisture, density and percent relative compaction using the following American Society for Testing and Materials (ASTM) field and laboratory test methods: D1557 Modified Proctor compaction curve, D2922 density (nuclear method), D3017 moisture (nuclear method).

4. The manhole structure backfill will be compacted to a minimum relative compaction of 95 percent in the underlying bedding zone, and in the surrounding 5-foot horizontal zone extending from the bedding zone top to the bottom of the overlying AC pavement layer.

5-10 **LATERAL INSTALLATION –** Sewer service laterals will be installed in accordance with Standard Details SS-6, SS-10, SS-11, and SS-12. Sewer laterals originating from sewer mains 14-feet in depth or greater will have the crotch on the VCP "wye" fitting filled with Class "A" or "B" concrete or as recommended by the National Clay Pipe Institute.

5-11 **PIPE BACKFILL QA/QC –** Pipe backfill will conform to Standard Details SS-1 and these Improvement standards. Construction quality assurance and quality control (QA/QC) of all utility trench backfill will be performed by the owner's/developer's geotechnical engineering consultant. A performance-based QA/QC specification will be developed and used for placement and compaction of all non-testable trench backfill materials. A design-based QA/QC specification will be used for placement and compaction of all testable trench backfill material.

A. **Performance Based QA/QC (Non-Testable Materials) –** Non-testable trench backfill materials generally consist of locally derived mixtures of cobbles with a sandy matrix and/or breccia (volcanic rock) with a sandy matrix. The non-testable backfill materials should have a maximum particle size of 6-inches (greatest dimension). Use of non-testable trench backfill materials will be approved by the City on a case-by-case basis.

A performance-based specification criteria will be used to evaluate the suitability of placed and compacted non-testable trench backfill materials. The property owner's/developer's geotechnical engineering consultant must prepare a work plan that describes a proposed site-specific performance-based specification for review and approval by the City prior to commencement of work. The work plan must include, but is not be limited to:

1. Maximum loose lift (layer thickness) prior to compaction.

2. Moisture content range to be achieved prior to compaction.

3. Minimum number of passes and coverage of specified compaction equipment.

4. Specified compaction equipment to be used.

B. **Design Based QA/QC (Testable Materials) –** Testable trench backfill materials generally consist of on-site native earth materials and imported earth materials that can be classified as soils according to the American Society for Testing and Materials (ASTM) Unified Soil Classifications System guideline procedures (ASTM D2487 and D2488). These soils materials can be easily tested to determine if they meet the project design based on QA/QC specifications for percent relative compaction by the following ASTM test methods:

ASTM D1556, Standard test method for in place density and unit weight of soil and soil-rock mixtures by the Sand-Cone Method.

ASTM D2922, Standard test method for in place density and unit weight of soil and soil-rock mixtures by the Shallow Depth Nuclear Method.

ASTM D3017, Standard test method for in place water content of soil and soil-rock mixtures by the Shallow Depth Nuclear Method.

C. **Trench Backfill Material –** The City requires designed based construction QA/QC testing and observation services to be performed by the owner's/developer's geotechnical engineering consultant to document that trench backfills meet or exceed the minimum material properties and minimum relative percent compaction requirements of the City specifications. The general trench backfill material types, and relative percent compaction are presented below.

1. **Type "B" Material:** Class 2 Aggregate Base Rock per Caltrans Standard Specifications.

2. **Type "C" Material:** Material will consist of gravel or crushed rock. Material will be screened and non-washed with a minimum sand equivalent of 30 per CTM217. All material will be free of wood, roots, or other deleterious material. Material to be ½" minus for 12-inch pipe or smaller and ¾" for pipe greater than 12-inches in diameter. Groundwater conditions will require ¾" uniform crushed rock regardless of pipe diameter. Drain rock will be wrapped in a layer of geotextile fabric.

3. **Type "D" Material:** Crushed rock or soil-rock mixture (native) not to exceed 3 inches. Up to a 6 inch minus material may be used with special considerations and conditions approved by the City and Geotechnical

Engineer. The material will be completely free of wood, roots, or other deleterious materials. Material not to be used within 24-inches of top of pipe without City Engineer's approval. Compaction will be by vibratory equipment or other approved devices. The City may require that the material be screened. A layer of geotextile fabric will be placed between the pipes and intermediate backfill zone. Material will only be used with geotechnical engineer's recommendation and with approval of the City Engineer.

4. **Type "E" Material:** A low strength, concrete slurry type backfill material made with a mixture of cement, fly-ash, and aggregate. To be used for intermediate zone backfill at depths greater than 5-feet below finished grade. For reference, refer to Section 3-9 "Materials".

D. **Pipe Zone Backfill –** For pipe 12-inches in diameter and smaller, no more than one-half of the pipe will be covered prior to shovel slicing (forcing rock backfill into the lower quadrants of the pipe) For pipe greater than 12-inches in diameter, no more than 6-inches will be covered prior to shovel slicing. At the discretion of the City Engineer or his/her representative, any pipe damaged during backfill will be removed.

Shovel slicing will be witnessed by the City Engineer prior to shading the pipe. Proposed bedding, hunching and initial backfill (pipe backfill) materials will be approved by soils engineer and submitted to the City Engineer with sieve analysis and sand equivalent test results. California Test Methods will include 216, 217, 301, and 302. Compaction equipment will not make direct contact with the pipe.

E. **Compaction Test Methods –** The percent relative compaction of all testable trench backfill soil are determined by a combination of the following ASTM test methods:

ASTM D1557, Modified Proctor Compaction Curve.

ASTM D1556, In-place Soil Density by The Sand Cone Replacement Method.

ASTM D2216, Soil Moisture Content by the Convection Oven Method.

ASTM D2922, In-place Soil Density by Nuclear Method.

ASTM D3017, In-place Soil Moisture Content by Nuclear Method.

ASTM D4643, Soil Moisture Content by the Microwave Oven Method

ASTM D4959, Soil Moisture Content by the Direct Heating Method.

F. **Testing Frequencies –** All field testable trench backfill materials, that are classified according to the Unified Soils Classification System using ASTM D2487 and D2488 procedures as CL, ML, SC, SM, GC, GM, GP and GW by ASTM tests

D422 (Particle Size Gradation) and D4318 (Atterberg Plasticity Indices), will be tested for percent relative compaction using a minimum frequency of one compaction test per maximum 12-inch-thick loose lift (layer) per 250-linear-feet of trench length or material change, whichever condition requires the greatest number of tests. Generally, minimum requirements include 12-inch loose lifts; moisture conditioned to at or above optimum moisture and compacted with 8 to 10 passes/lifts by a sheepsfoot wheel mounted on a Cat 225 or equivalent. At the discretion of the City Engineer, City may require alternative compaction equipment combined with thinner lifts.

All field testable trench backfill materials, that are classified according to the Unified Soils Classification System using ASTM D2487 and D2488 procedures as CL, CH, ML and MH by ASTM tests D422 (Particle Size Gradation) and D4318 (Atterberg Plasticity Indices), should be tested for percent relative compaction using a minimum frequency of one compaction test per maximum 12-inch-thick loose lift (layer) per 100-linear-feet of trench length or material change, which ever condition requires the greatest number of tests.

G. **Warning Tape –** A 12-inch wide metallic backfill tape with the warning "Buried Sewer Main" will be placed in the trench lines of all mains and services, 24- inches above the top of pipe within road areas and 18-inches above the top of pipe within non-road areas.

H. **Markings in Unpaved Areas –** Mains in unpaved areas will be marked every 125 lineal feet with a green composite utility marker with a decal stating "Caution Buried Sewer Pipeline". Mains in landscaped areas will be delineated with a brass marker set in an 8-inch diameter concrete cylinder. The brass marker will state "City of Lincoln Sewer Main".

5-12 **TESTING OF INSTALLED IMPROVEMENTS** - Sewer mains, laterals, and manholes will be tested by these procedures:

A. **Sewer mains and services –** Sewer mains and services will be air pressure tested and Closed-Circuit Television (CCTV) inspected by the City Engineer after installation of the joint trench utility crossings and subgrade elevations have been met. 72-hour written notification is required to the City Engineer, without exception. The City shall require sewer mains and services to be re-tested prior to the completion of the one-year warranty. The Contractor is responsible for the costs associated with this re-testing.

1. **Air Pressure Test –** Sewer mains and lower laterals to be pressure tested according to these standards, NCPI Low-Pressure Air Test Booklet (Ver. 2016), and ASTM C828, Table 1:

   a. Add air to the lines until the pressure is stabilized at 3.5-psi, using a liquid filled test gauge capable of testing up to 15-psi and graduated to 1/10-psi.

   b. For mains installed in an area where the water table is higher than the pipe, the test pressure will be increased 0.5-psi per foot of water over the pipe.

   c. Determine the test time from Table 1 (minimum time 60 seconds)

TABLE 1 – Minimum Test Time for Various Pipe Sizes (Pressure drop from 3½-psi to 2½-psi)

Size	Time per 100-feet	Size	Time per 100-feet	Size	Time per 100-feet
4-inch	0.3-min	10-inch	1.5-min	18-inch	2.4-min
6-inch	0.7-min	12-inch	1.8-min	21-inch	3.0-min
8-inch	1.2-min	15-inch	2.1-min	24-inch	3.6-min

2. **Closed Circuit Television Inspections** – CCTV inspections will be performed by the Contractor. Costs for said inspection will be borne by the Contractor. Preliminary inspections may be performed by outside contractors, but will not be accepted by the City Engineer as an official record. The City Engineer, will be notified in writing 72-hours in advance of testing, without exception and will be present during television inspection. Without prior notification, the City reserves the right to reject all final T.V inspections.

   The sewer system will be completely cleaned by an approved method prior to TV inspection. The sewer system will be rejected if any of these conditions exist:

   a. Standing water or sags greater than ½ - inch in depth.

   b. Standing water in services.

   c. Offset joints.

   d. Cracked pipe.

   e. Infiltration.

   f. Protruding laterals.

Refer to the NASSCO Pipeline Assessment Standards for performance standards, including general information and definitions, quality standards, record keeping requirements, digital data formatting, appropriate screen text information and narrations and special CCTV procedures.

B. Manhole – Sewer manholes will pass a vacuum test consisting of the following criteria and procedures. The City Engineer will be notified 72-hours in advance to be present during testing, without exception.

1. The test will be performed after assembly of the manhole, but prior to backfilling. The Contractor will perform the test and supply all test equipment. The City Engineer will witness the test results.

2. Lift holes will be filled with non-shrink grout and allowed to cure prior to testing.

3. All pipes entering and exiting the manhole will be plugged. Securely brace the plugs to prevent them from being drawn into the manhole. Unused channels will be permanently plugged with a plastic or clay stopper and be filled and grouted.

4. A vacuum of 10-inches of mercury will be drawn to start the test. The amount of time required for the vacuum to drop to 9-inches will be measured. The manhole will pass the test if the amount of elapsed time is greater than 60-seconds for a 48-inch manhole, 75-seconds for a 60-inch manhole, 90-seconds for a 72-inch manhole and 120-seconds for an 84-inch manhole. A liquid vacuum gauge will be used for testing.

5. If the manhole fails the initial test, necessary repairs will be made with a non-shrink grout while the vacuum is still being drawn. Retesting will proceed until the elapsed times are satisfactory.

6. After passing the vacuum test, all joints will then be mortared, inside and out. Outside mortared joints will be allowed to dry before backfilling.

7. In cases where groundwater is anticipated to be encountered either presently or in the future, the City Engineer may require a leak test to be performed per the “Green Book”.

5-13 **PUNCH LIST PROCESS** - After the sewer manholes have been raised to finished grade, the sewer system will be flushed in the presence of the City Engineer. When the Contractor feels all improvements are substantially complete, a punch list inspection of final outstanding items can be requested by the contractor. The City Engineer or his/her delegated representative will be notified 48-hours in advance to be present during punch list inspection.

5-14 REPAIRING INSTALLED IMPROVEMENTS – Sewer mains, services, manholes and appurtenances will be repaired per the Improvement Standards:

A. Repairing Vitrified Clay Pipe (VCP)

1. Damaged pipe will be exposed and replaced in-kind by "bridging" the new pipe into place. Coupling devices will not be used.

2. Sagging or misaligned pipe will be exposed and corrected in place if possible. If the pipe is defective, then a new pipe will be bridged in place.

3. After the correction has been completed, the excavation will be backfilled and compacted to grade as specified. The repairs will then be retested per the requirements of these Improvement Standards.

5-15 MATERIALS

All steel and iron materials furnished for incorporation into sanitary sewer work will be manufactured in the United States. A Certification of Compliance, conforming to the provisions in Section 6-2.05, "Buy America", of the Caltrans Specifications will be furnished for steel materials. The certificates, in addition to certifying that the materials comply with the Specifications, will also specifically certify that all manufacturing processes for the materials occurred in the United States.

A. Approved Equal – The words "approved equal" will mean any material deemed by the City Engineer to be acceptable for use within the City's sewer system as compared to products of specified manufacturers. Specifications for materials (submittals) to be used on the project will be submitted to the City Engineer prior to the start of construction. The submittal will include a letter with:

1. **Product –** A description of the product and the appropriate materials specification section number.

2. **Contact –** The name and telephone number of the contact person for the proposed product.

3. **Reference –** A list of other agencies who are using the proposed product (include names and telephone numbers)

   Address the letter to the City of Lincoln Engineering Department at 600 Sixth Street, Lincoln, CA 95648, ATTN: City Engineer. City staff may request a sample of the product for review.

   Criteria and designs standards for review of the system components will be as outlined in Lincoln Design Criteria & Procedures Manual. The Contractor will

submit all material for review 35-days prior to construction. All submittals will include documentation verifying contract award date and start date. Contractors will allow 2 to 4 weeks of review time by the City Engineer or his/her delegated representative.

B. **Unapproved Materials –** Materials not approved for use on the project will be removed from the site within 24-hours if requested by the City Engineer.

C. **Backfill Material –** Detailed specifications for backfill material are provided in Section 5-11.

D. **VCP Sewer Main and Service Laterals** - Unless noted on the approved plans, all pipes will be Extra Strength Class Vitrified Clay Pipe Bell and Spigot (VCP), conforming to ASTM C700-C301, C828, C425, and C12 Standards. For diameters greater than 15-inch, pipe bell and spigot to be new High Strength Class. The VCP will not be dipped in a solution to enhance air pressure tests.

E. **PVC Sewer Force Main –** Force Mains less than 6" will be constructed of PVC Schedule 80.

F. **HDPE Sewer Force Main –** Force Mains 6" in diameter or larger will be constructed of High Density Polyethylene (HDPE) with butt-fused joints and wall thickness of not less than DR11.

G. **Cleanout** - Cleanout access boxes in paved areas will be Christy G5, Christy F08 valve box or equal. Cleanout access boxes in roadways and driveways will be traffic-rated. Cleanout access boxes in landscaped areas will be Carson 910 or equal.

H. **Manholes** - Manholes, frames and covers are to be in accordance with Standard Details SS-3, SS-4 and SS-5. All materials used in cast-in-place concrete or precast concrete will conform to ASTM C-150 Specifications with Type V cement for sulfate protection.

1. **Barrels, Cones and Lids** (all materials to be USA made)

   a. **48-inch Manhole Material**: Jensen Precast, Oldcastle Precast, or approved equal

   b. **60-inch Manhole Material:** Jensen Precast, Oldcastle Precast, or approved equal

   c. **72-inch Manhole Material**: Jensen Precast, Oldcastle Precast, or approved equal

2. **Manhole Frame and Cover:** D & L Supply or approved equal

3. **Precast Manhole Base:** Jensen Precast or approved equal

J. Appurtenances

1. **Air Release Valve –** APCO Model 450 or approved equal.

2. **Clay to Concrete Sealant –** Sikaflex® or approved equal.

3. **Cleanout Caps –** ABS.

4. **Couplings –** For 4-inch lines, use Flex Seal Repair Couplings for ABS. Cap only, or approved equal. For 4-inch to 12-inch lines, use Mission Rubber Repair Coupling or approved equal. Couplings may not be used in new construction.

5. **Flange Gaskets -** All flange gaskets to be neoprene rubber or red rubber, USSO Standard B.16.21 insulation flange kits - Calpico Type E full-face gasket with two-side insulation.

6. **Joint Sealing Compound -** RAM-NEK®, Con Seal Compound or approved equal

7. **Location Stakes -** Carsonite CRM3 072 07 with anchor barb kit or approved equal with caution stickers attached and organization identification decal stating: CITY OF LINCOLN - CALL BEFORE DIGGING (916) 434-2450.

   For pressurized sewer mains, use decal 1977CPS-A or approved equal. For gravity sewer mains, use decal 225CS-A or approved equal.

8. **Mortar -** Non-shrink grout during manhole vacuum testing and as specified. Standard mortar mix for all other applications.

9. **Silicone -**100% silicone with a 25-year life or approved equal.

10. **Sulfide Protection -** Hydro Pox 204 or approved equal.

11. **Wastewater Marking Tape -** 12” wide detectable warning tape; Northtown Company, Christy, or approved equal. #10 insulated copper tracer wire to be used on PVC or HDPE sewer force main pipe.

12. **Parshall Flume -** Plasti-Fab or equal. City will specify the size and location of the flume on a case-by-case basis.

[THIS PAGE INTENTIONALLY LEFT BLANK]

SEWER DETAILS

Sewer Trench Detail *SS-1*
Manhole Backfill Detail *SS-1A*
Inside Drop Connection Detail *SS-2*
Sewer Manhole Cover *SS-3*
Eccentric Manhole Detail (6”-24” Diameter Pipe) *SS-4*
Shallow Manhole Detail (6”-24” Diameter Pipe) *SS-5*
Cleanout to Grade (Sewer Connected to Wye) *SS-6*
ABS, PVC, VCP Cleanout to Grade (Sewer Connected to Riser) *SS-7*
Cut-Off Wall Detail *SS-8*
Concrete Encasement Detail *SS-9*
Sanitary Sewer and Water Main Separation Details *SS-10*
Sewer Tee Details *SS-11*
Sewer Lateral Details *SS-12*
Backwater Overflow System and Standard 4” Cleanout Detail *SS-13*
Anchor Detail *SS-14*
Standard 60” & 72” Diameter Sewer Manholes *SS-15*
Saddle Manhole *SS-16*
Deep Sewer Trench Detail *SS-17*

[THIS PAGE INTENTIONALLY LEFT BLANK]

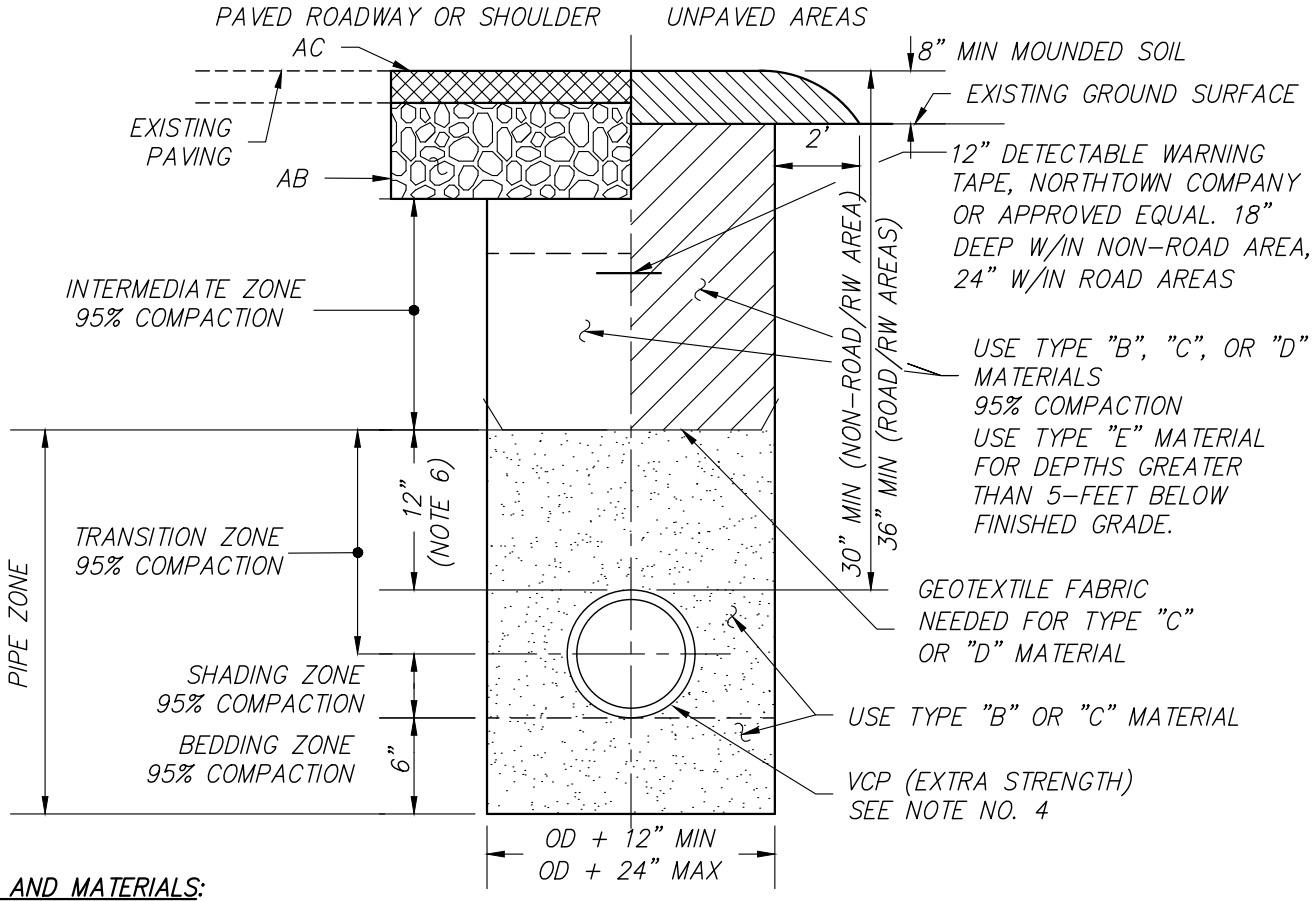

BEDDING AND MATERIALS:

TYPE "B" MATERIAL: CLASS 2 AGGREGATE BASE PER CALTRANS STANDARD SPECIFICATIONS.

TYPE "C" MATERIAL: MATERIAL WILL CONSIST OF GRAVEL OR CRUSHED ROCK. MATERIAL WILL BE SCREENED AND NON-WASHED WITH A MINIMUM SAND EQUIVALENT OF 30 PER CTM217. ALL MATERIAL WILL BE FREE OF WOOD, ROOTS, OR OTHER DELETERIOUS MATERIAL. MATERIAL TO BE 1/2" MINUS FOR 12-INCH PIPE OR SMALLER AND 3/4" MINUS FOR PIPE GREATER THAN 12-INCHES IN DIAMETER. GROUNDWATER CONDITIONS WILL REQUIRE 3/4" UNIFORM CRUSHED ROCK REGARDLESS OF PIPE DIAMETER. DRAIN ROCK WILL BE WRAPPED IN A LAYER OF GEOTEXTILE FABRIC.

TYPE "D" MATERIAL: CRUSHED ROCK OR SOIL-ROCK MIXTURE (NATIVE) NOT TO EXCEED 3". UP TO A 6" MINUS MATERIAL MAY BE USED WITH SPECIAL CONSIDERATIONS AND CONDITIONS APPROVED BY CITY AND GEOTECHNICAL ENGINEER. THE MATERIAL WILL BE COMPLETELY FREE OF WOOD, ROOTS OR OTHER DELETERIOUS MATERIAL. MATERIAL NOT BE USED WITHIN 24" OF TOP OF PIPE WITHOUT CITY ENGINEERS APPROVAL. COMPACTION WILL BE BY VIBRATORY EQUIPMENT OR OTHER APPROVED DEVICES. THE CITY MAY REQUIRE THAT THE MATERIAL BE SCREENED. A LAYER OF GEOTEXTILE FABRIC WILL BE PLACED BETWEEN THE PIPES AND INTERMEDIATE BACKFILL ZONE. MATERIAL WILL ONLY BE USED WITH GEOTECHNICAL ENGINEER'S RECOMMENDATION AND WITH APPROVAL OF THE CITY ENGINEER.

TYPE "E" MATERIAL: A LOW STRENGTH, CONCRETE SLURRY TYPE BACKFILL MATERIAL MADE WITH A MIXTURE OF CEMENT, FLY-ASH, SAND, AND AGGREGATE. TO BE USED FOR INTERMEDIATE ZONE BACKFILL AT DEPTHS GREATER THAN 5-FEET BELOW FINISHED GRADE. FOR REFERENCE, REFER TO SECTION 3-9 "MATERIAL".

NOTES:

1. CREEK CROSSING OR SHALLOW TRENCH SHALL REQUIRE SPECIAL PIPE PER APPROVAL OF CITY ENGINEER.
2. BEDDING FOR OTHER APPROVED PIPE TO BE APPROVED BY CITY ENGINEER AND PER ASTM C12.
3. CITY WILL REQUIRE CUT-OFF WALLS IN TRENCHES TO CONTROL PERMEABILITY AND/OR REQUIRE GEOTEXTILE BARRIER WRAP FOR MATERIAL NOT MEETING A TYPE "A" OR "B" MATERIAL SPEC.
4. PIPE TO BE VCP (EXTRA STRENGTH) OR 12" DIA. OR LESS HIGH STRENGTH FOR 15" DIA. OR GREATER, EXCEPT AS REQUIRED BY CITY ENGINEER
5. SHOVEL SLICING TO BE USED ALONG WITH MECHANICAL (VIBRATORY) AT 12" MAX LOOSE LIFTS.
6. TYPE "D" MATERIAL REQUIRES 24" INCHES BACKFILL ABOVE PIPE.
7. TYPE "C" AND "D" MATERIALS MAY ONLY BE USED WITH CITY ENGINEER APPROVAL AND GEOTECHNICAL ENGINEER RECOMMENDATION.

CITY OF LINCOLN
ENGINEERING DEPARTMENT

SEWER TRENCH DETAIL

REVISIONS:	DATES:	APPROVED:
		CITY ENGINEER DATE

SCALE: NONE
DATE: SEPTEMBER 2019
DRAWN BY: C.G.

SS-1

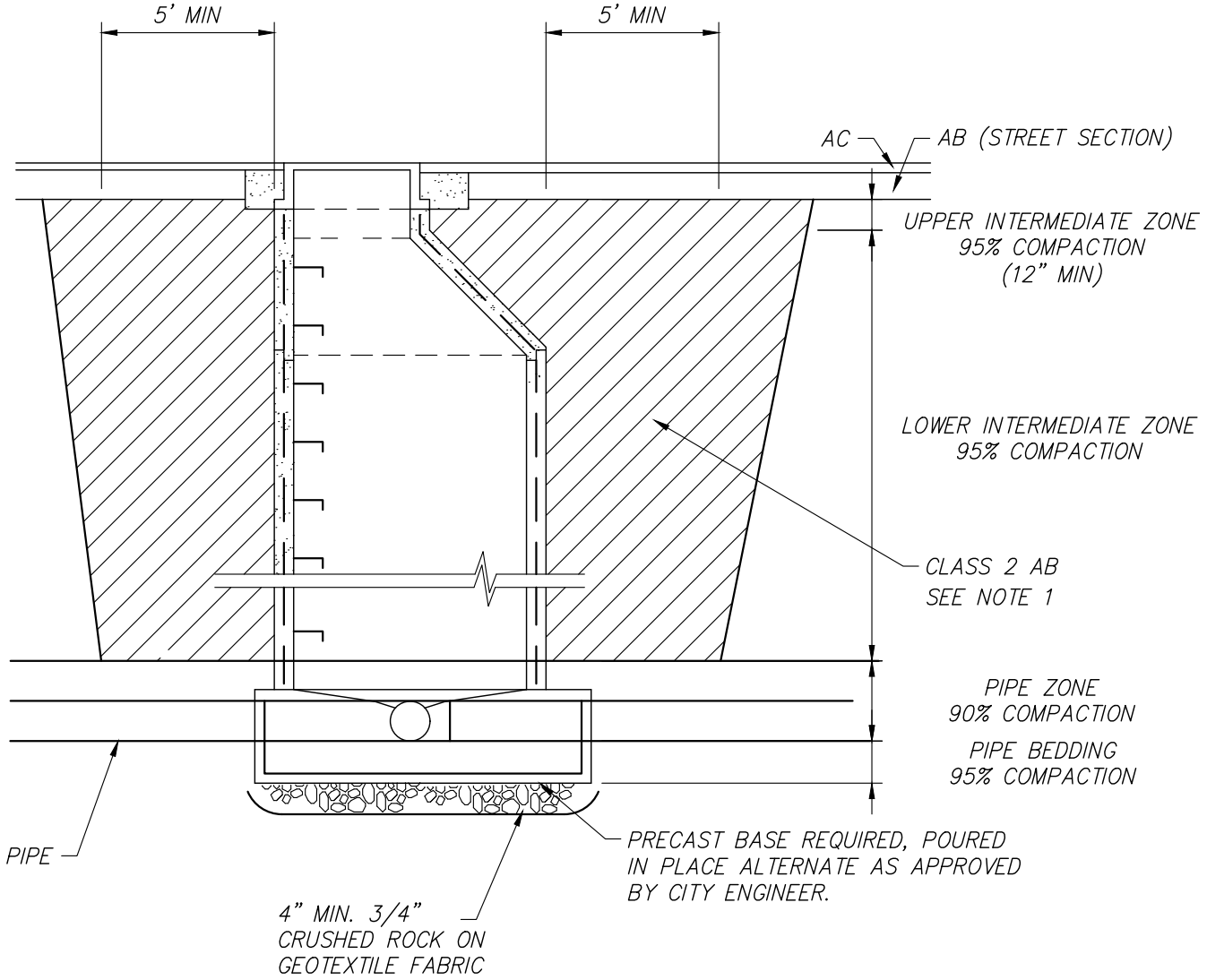

NOTES:

1. FOR DEPTHS GREATER THAN 5-FEET BELOW FINISHED GRADE, BACKFILL WITH TYPE "E" MATERIAL (SEE DETAIL SS-1).

CITY OF LINCOLN
ENGINEERING DEPARTMENT

MANHOLE
BACKFILL DETAIL

REVISIONS:	DATES:	APPROVED:	SCALE: NONE DATE: SEPTEMBER 2019 DRAWN BY: C.G.	SS-1A
		CITY ENGINEER DATE		

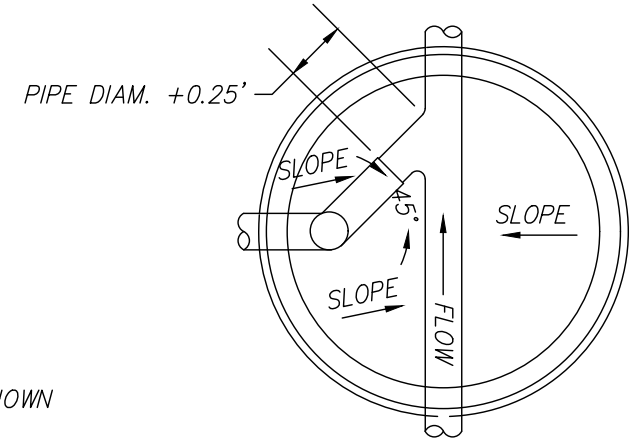

PLAN

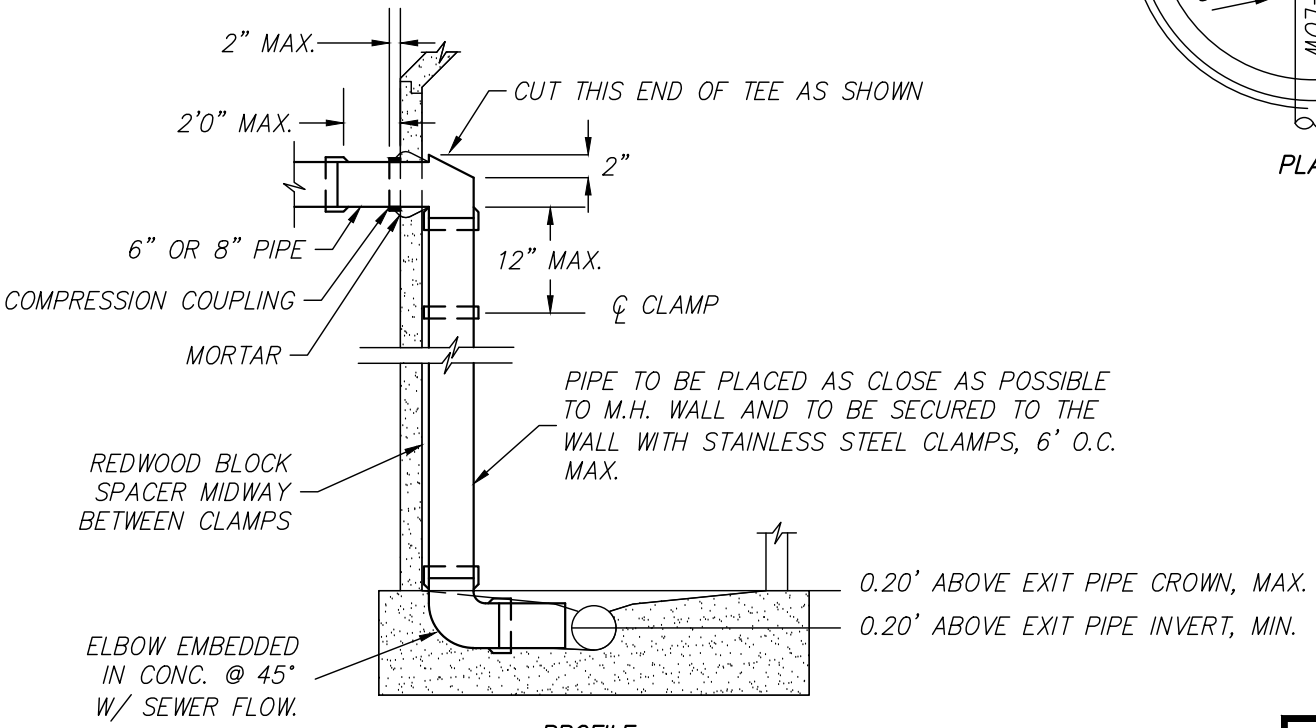

PROFILE

NOTE:

1. ALL INSIDE DROP PIPING TO BE P.V.C. OR A.B.S.
2. CEMENT ALL JOINTS.
3. DROP CONNECTION PIPE AND FITTINGS TO BE SAME SIZE AS ENTERING PIPE. CLAMPS TO BE 11/2:x12 GAUGE
4. STAINLESS STEEL, ANCHORED TO M.H. WALL WITH 2-1/2" CADMIUM PLATED BOLTS.

CITY OF LINCOLN
ENGINEERING DEPARTMENT

INSIDE DROP CONNECTION DETAIL

REVISIONS:	DATES:	APPROVED:
		CITY ENGINEER DATE

SCALE: NONE
DATE: SEPTEMBER 2019
DRAWN BY: C.G.

SS-2

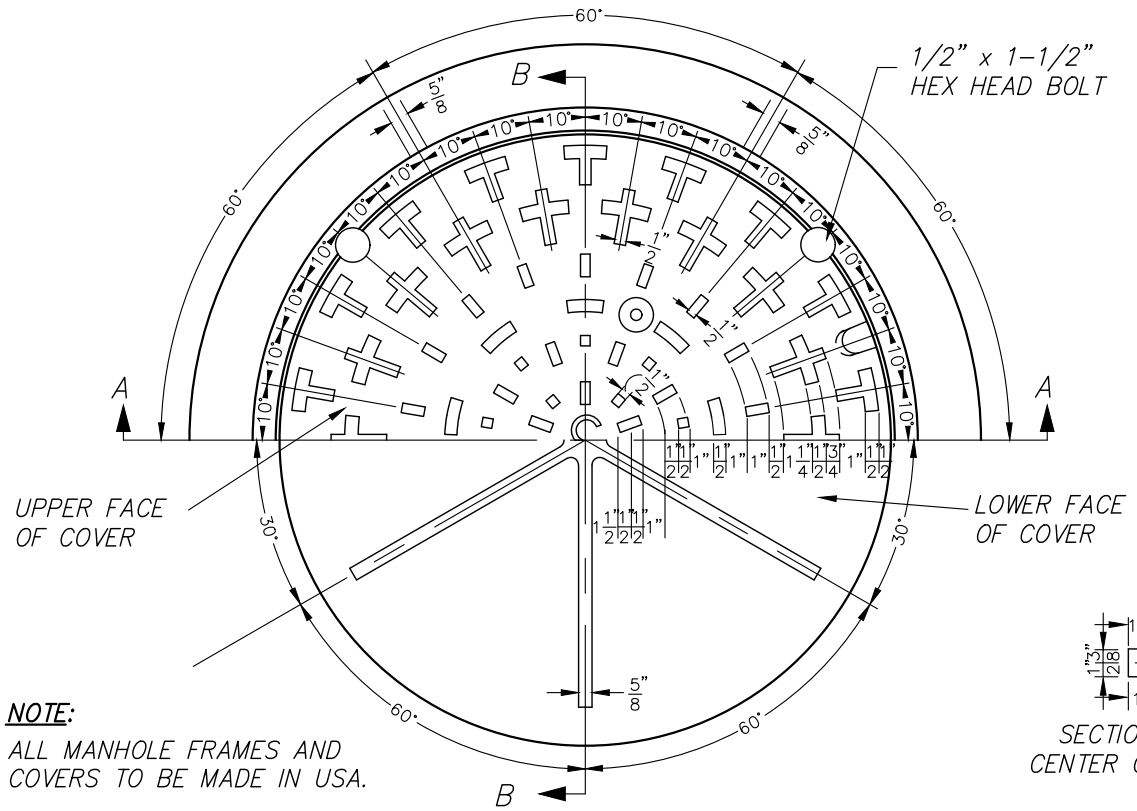

NOTE:
ALL MANHOLE FRAMES AND COVERS TO BE MADE IN USA.

HALF PLAN OF HEAD AND COVER

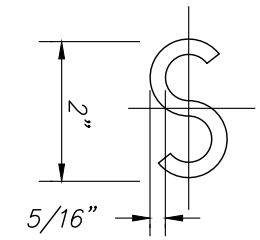

LETTER 'S' AT
CENTER OF COVER

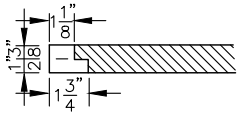

SECTION THROUGH
CENTER OF PICK HOLE

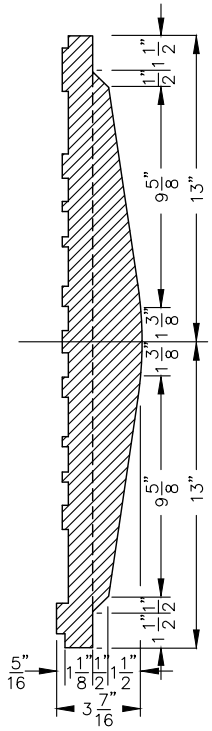

SECTION B-B

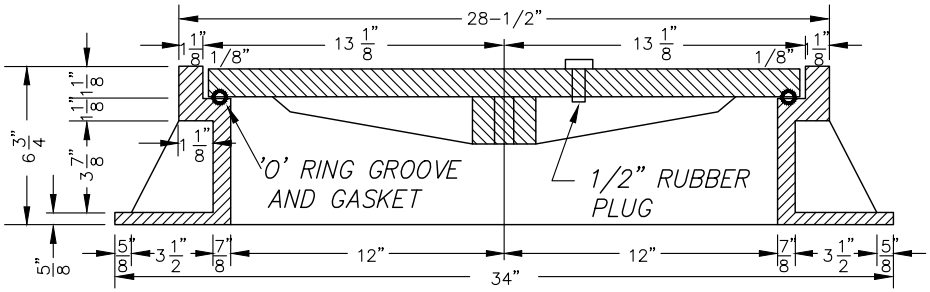

SECTION A-A

CITY OF LINCOLN
ENGINEERING DEPARTMENT

SEWER MANHOLE COVER

REVISIONS:	DATES:	APPROVED:
		CITY ENGINEER DATE

SCALE: NONE
DATE: SEPTEMBER 2019
DRAWN BY: C.G.

SS-3

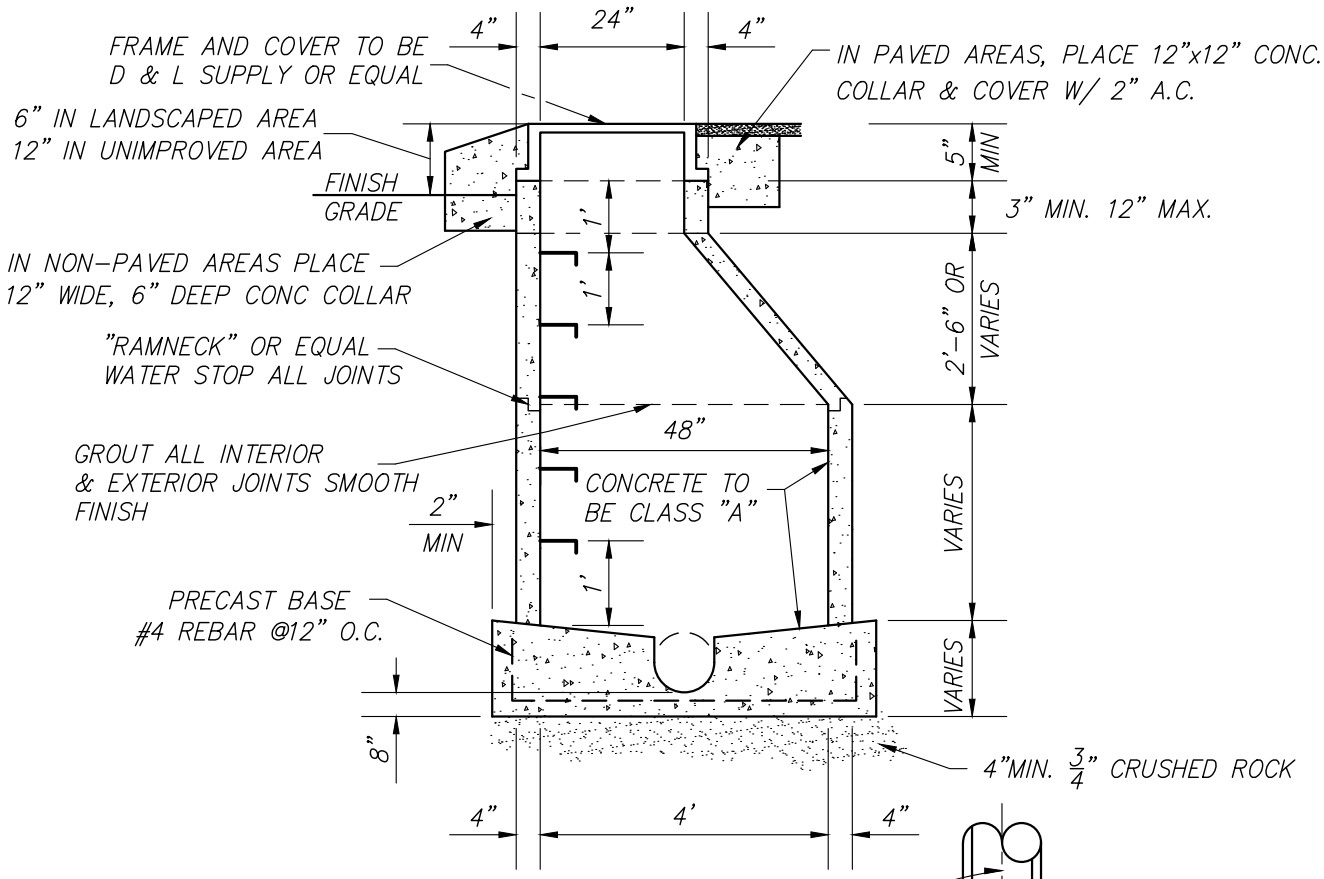

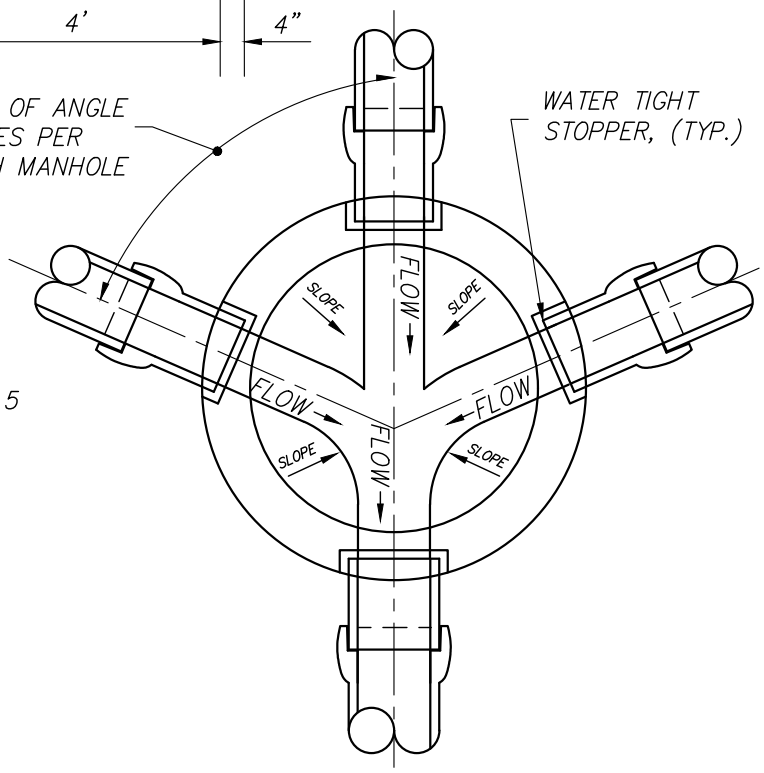

NOTES:

1. ECCENTRIC CONE FOR DEPTHS GREATER THAN 5 FEET AND PLACE OPENING OVER UPSTREAM INVERT OF MANHOLE.
2. ALL MANHOLE BASES TO BE PRECAST UNLESS OTHERWISE APPROVED BY CITY ENGINEER.
3. BASE TO HAVE 0.1' FALL FROM INVERT INLET TO INVERT EXIT.
4. CLASS "A" CONCRETE 3000 P.S.I. MIN. 28 DAYS.
5. M.H. LIDS SHALL BE SEALED WITH AN APPROVED RUBBER GASKET.
6. FIXED POLYPROPYLENE LADDERS TO BE 14" WIDE INSTALLED IN WALLS OF MANHOLE,
7. ALL M.H. JOINTS TO BE TONGUE AND GROOVE.
8. SEE SS-1A FOR BACKFILL REQUIREMENTS.

CITY OF LINCOLN
ENGINEERING DEPARTMENT

ECCENTRIC MANHOLE DETAIL
(6"-24" DIAMETER PIPE)

REVISIONS:	DATES:	APPROVED:
		CITY ENGINEER DATE

SCALE: NONE
DATE: SEPTEMBER 2019
DRAWN BY: C.G.

SS-4

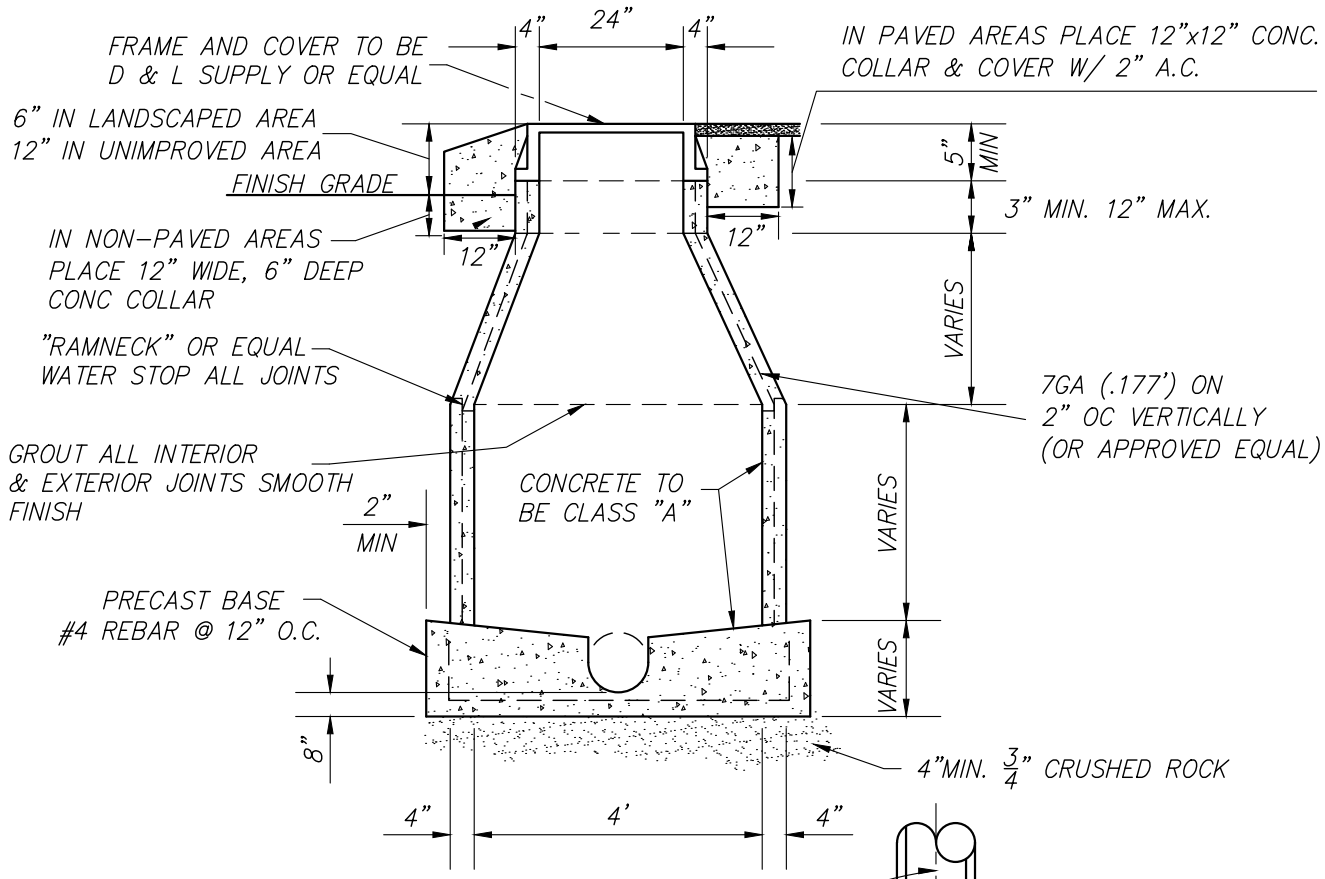

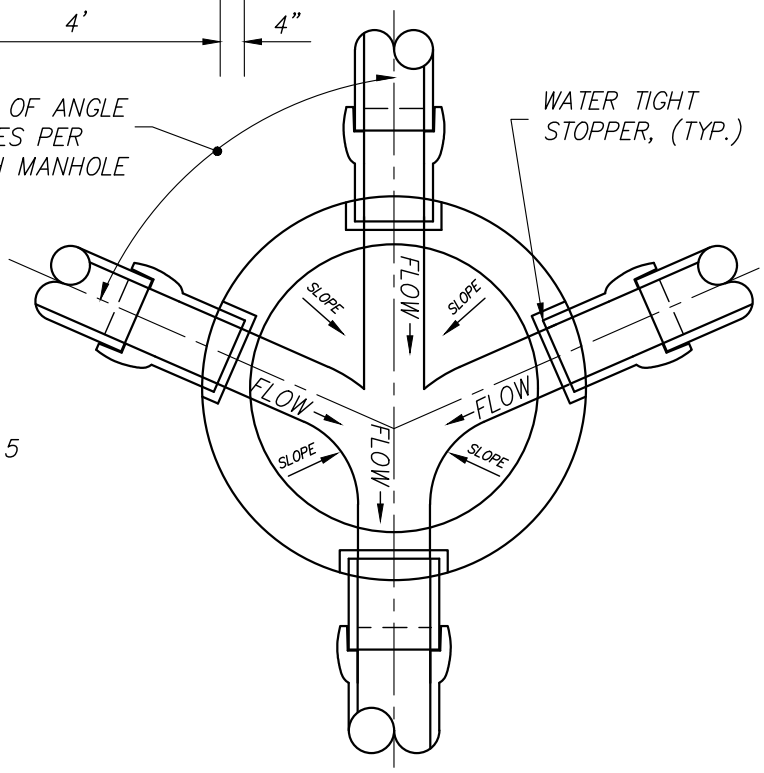

NOTES:

1. ECCENTRIC CONE FOR DEPTHS GREATER THAN 5 FEET (SEE SS-4).
2. ALL MANHOLE BASES TO BE PRECAST UNLESS OTHERWISE APPROVED BY CITY ENGINEER.
3. BASE TO HAVE 0.1' FALL FROM INVERT INLET TO INVERT EXIT.
4. CLASS "A" CONCRETE 3000 P.S.I. MIN. 28 DAYS.
5. 60" MANHOLES TO BE USED FOR PIPES GREATER THEN 24" IN DIAMETER.
6. NO CAULDER OR REPAIR COUPLINGS SHALL BE USED FOR NEW CONSTRUCTION.
7. ALL M.H. JOINTS TO BE TONGUE AND GROOVE
8. SEE SS-1A FOR BACKFILL REQUIREMENTS.

CITY OF LINCOLN
ENGINEERING DEPARTMENT

SHALLOW MANHOLE DETAIL
(6"-24" DIAMETER PIPE)

REVISIONS:	DATES:	APPROVED:
		CITY ENGINEER DATE

SCALE: NONE
DATE: SEPTEMBER 2019
DRAWN BY: C.G.

SS-5

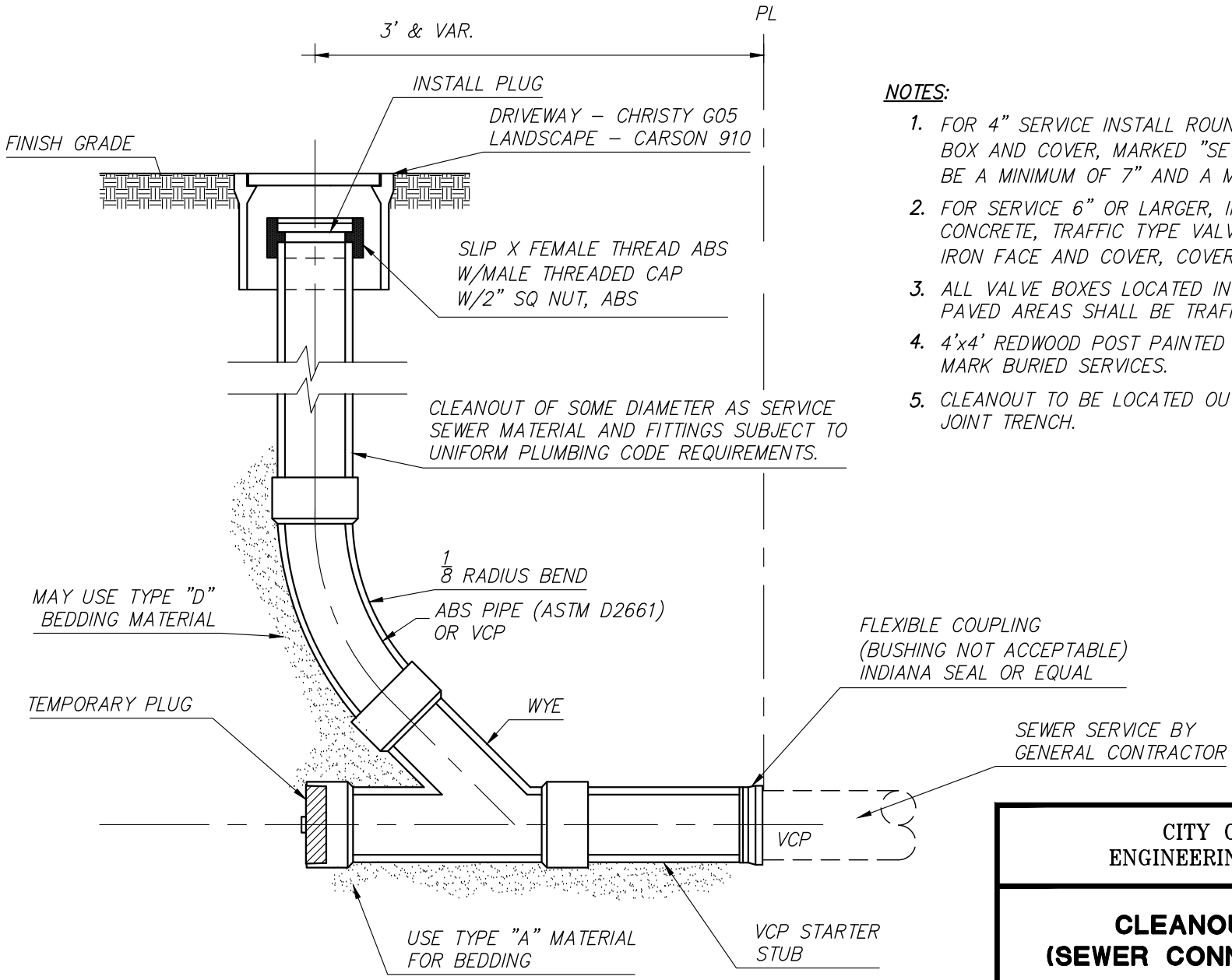

NOTES:

1. FOR 4" SERVICE INSTALL ROUND, CONCRETE OR PVC VALVE BOX AND COVER, MARKED "SEWER". INSIDE DIAMETER TO BE A MINIMUM OF 7" AND A MAXIMUM OF 10".
2. FOR SERVICE 6" OR LARGER, INSTALL ROUND, CONCRETE, TRAFFIC TYPE VALVE BOX WITH CAST IRON FACE AND COVER, COVER TO BE MARKED "SEWER".
3. ALL VALVE BOXES LOCATED IN CONCRETE OR ASPHALT PAVED AREAS SHALL BE TRAFFIC TYPE.
4. 4'x4' REDWOOD POST PAINTED GREEN MAY BE USED TO MARK BURIED SERVICES.
5. CLEANOUT TO BE LOCATED OUTSIDE OF DRY UTILITY JOINT TRENCH.

CITY OF LINCOLN
ENGINEERING DEPARTMENT

CLEANOUT TO GRADE
(SEWER CONNECTED TO "WYE")

REVISIONS:	DATES:	APPROVED:
		CITY ENGINEER DATE

SCALE: NONE
DATE: SEPTEMBER 2019
DRAWN BY: C.G.

SS-6

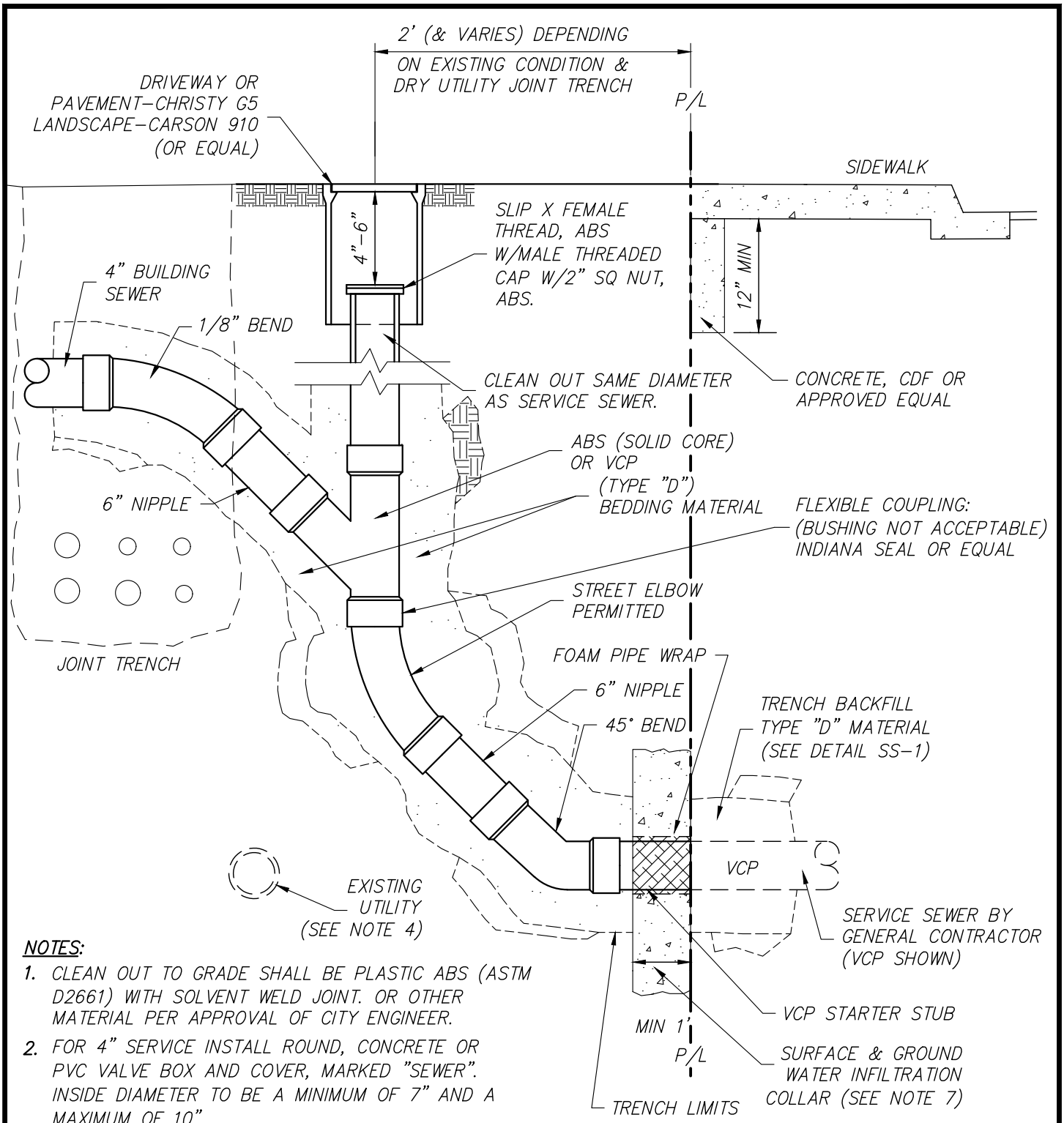

NOTES:

1. CLEAN OUT TO GRADE SHALL BE PLASTIC ABS (ASTM D2661) WITH SOLVENT WELD JOINT. OR OTHER MATERIAL PER APPROVAL OF CITY ENGINEER.
2. FOR 4" SERVICE INSTALL ROUND, CONCRETE OR PVC VALVE BOX AND COVER, MARKED "SEWER". INSIDE DIAMETER TO BE A MINIMUM OF 7" AND A MAXIMUM OF 10".
3. FOR SERVICE 6" OR LARGER, INSTALL ROUND, CONCRETE, TRAFFIC TYPE VALVE BOX WITH CAST IRON FACE AND COVER, COVER TO BE MARKED "SEWER".
4. INSTALLATION TO AVOID EXISTING UTILITY ONLY.
5. CLEANOUT TO BE PLACED AT A MINIMUM 4' DEPTH AND AT A MAXIMUM 5' DEPTH.
6. 4'x4' REDWOOD POST PAINTED GREEN MAY BE USED TO MARK BURIED SERVICES.
7. USE EITHER CONTROLLED DENSITY FILL, BENTONITE, OR APPROVED EQUAL.

CITY OF LINCOLN
ENGINEERING DEPARTMENT

ABS, PVC, OR VCP
CLEANOUT TO GRADE
(SEWER CONNECTED TO RISER)

REVISIONS:	DATES:	APPROVED:
		CITY ENGINEER DATE

SCALE: NONE
DATE: SEPTEMBER 2019
DRAWN BY: C.G.

SS-7

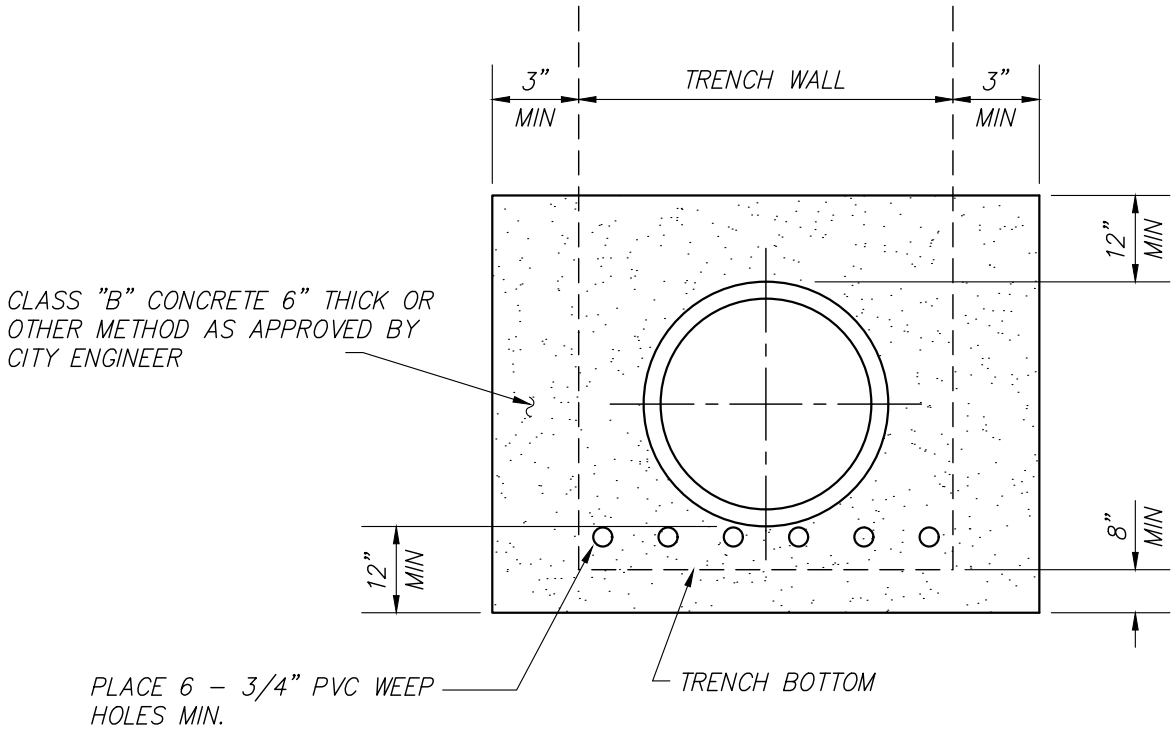

CUT-OFF WALL DETAIL

NOTES:

1. CUT-OFF WALL TO BE PLACED 3' MIN. AWAY FROM PIPE JOINT.
2. CUT-OFF WALL TO BE INSTALLED PER DIRECTION OF GEOTECHNICAL ENGINEER AND/OR CITY ENGINEER.
3. ALL CUT OFF WALLS TO BE SPACED AT A MINIMUM 1000' SPACING.
4. OPTIONAL MATERIALS TO BE 2 SACK SAND CEMENT SLURRY OR BENTONITE CLAY, AND MUST BE APPROVED BY THE CITY ENGINEER.
5. CUT-OFF WALLS REQUIRED IN TRENCHES WITH A SLOPE GREATER THAN 2%.
6. CUT-OFF TRENCHES TO BE REQUIRED BY CITY ENGINEER AT SPECIFIED LOCATIONS TO DIVERT TRENCH WATER.

CITY OF LINCOLN
ENGINEERING DEPARTMENT

CUT-OFF WALL DETAIL

REVISIONS:	DATES:	APPROVED:
		CITY ENGINEER DATE

SCALE: NONE
DATE: SEPTEMBER 2019
DRAWN BY: C.G.

SS-8

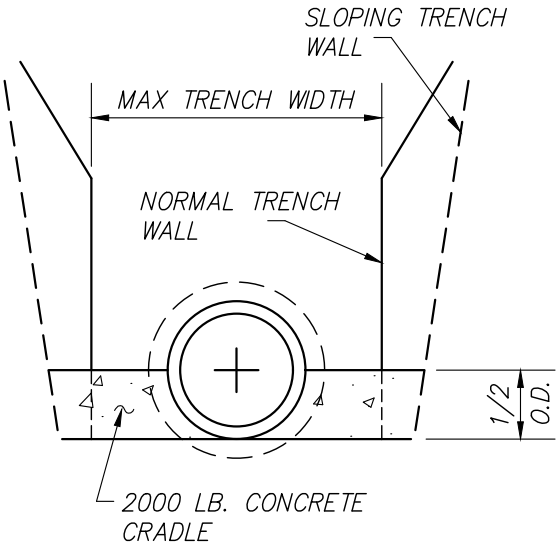

CRADLE FOR EXCESSIVE TRENCH BOTTOM WIDTH

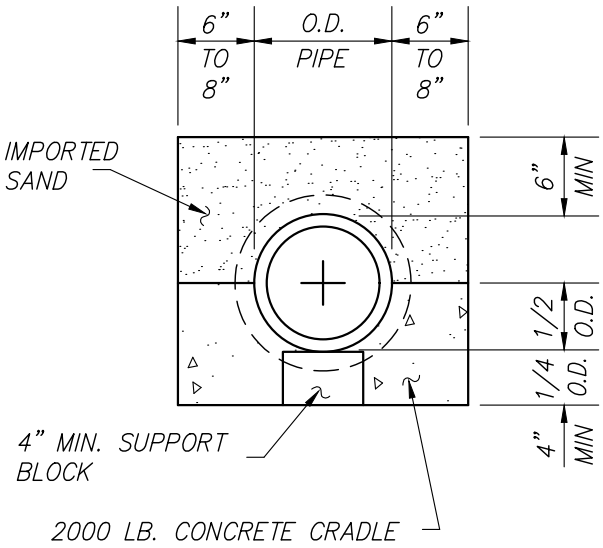

CONCRETE BLOCK

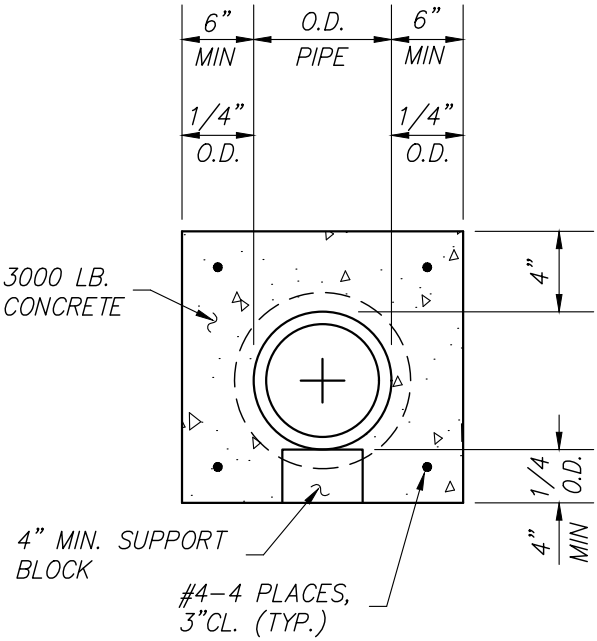

CONCRETE ENCASEMENT

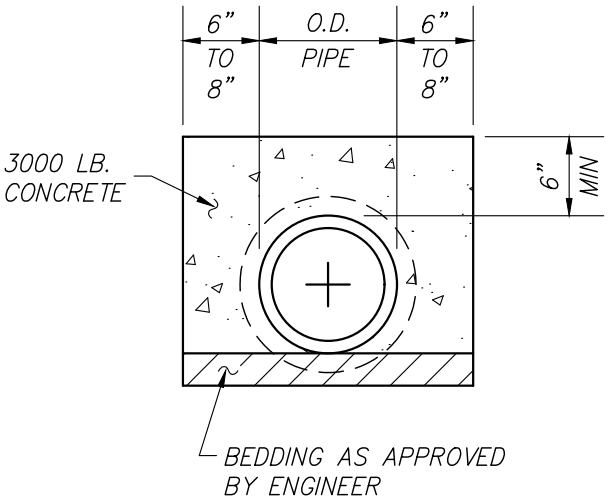

CONCRETE JACKET

NOTES:

1. ALL PIPING VITRIFIED CLAY PIPE (VCP) AND POLY WRAPPED UNLESS OTHERWISE SPECIFIED BY CITY ENGINEER.
2. SUBSTITUTE MATERIALS CAN BE USED FOR CONCRETE JACKETS AND ENCASEMENT PER APPROVAL BY THE CITY ENGINEER.

CITY OF LINCOLN
ENGINEERING DEPARTMENT

CONCRETE ENCASEMENT DETAIL

REVISIONS:	DATES:	APPROVED:
		CITY ENGINEER DATE

SCALE: NONE
DATE: SEPTEMBER 2019
DRAWN BY: C.G.

SS-9

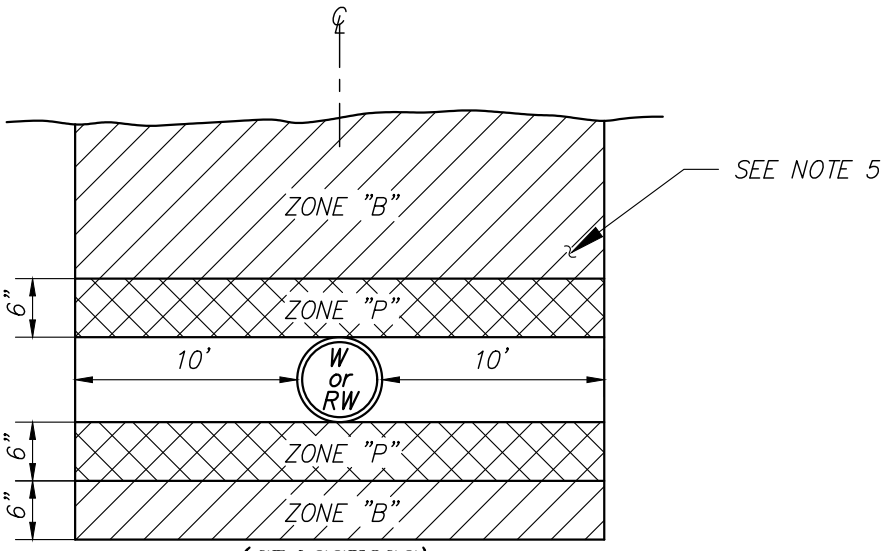

(CROSSINGS)

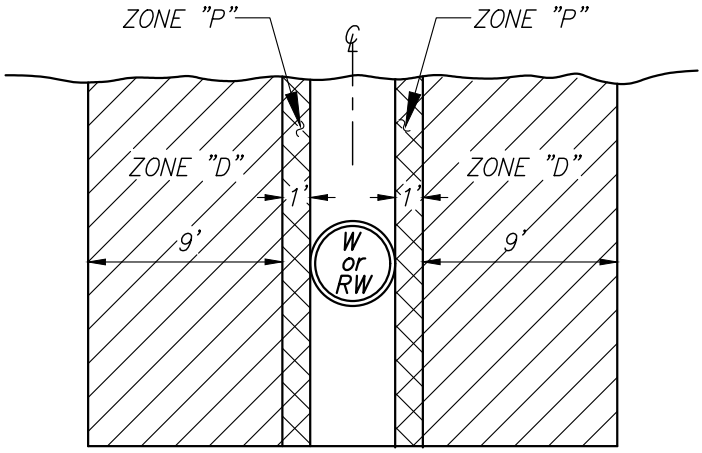

(PARALLEL CONSTRUCTION)

SANITARY SEWER & WATER OR RECYCLED WATER MAIN DETAIL

NOTES:

1. ALL ZONES REQUIRE REVIEW BY CITY ENGINEER.
2. ZONE "B" SPECIAL PIPE REQUIRED, NO JOINTS, REQUIRES CITY AND DIVISION OF DRINKING WATER APPROVAL.
3. ZONE "D" SPECIAL PIPE REQUIRED, REQUIRES CITY AND DIVISION OF DRINKING WATER APPROVAL.
4. ZONE "P" PROHIBITED, NO PIPES.
5. NO JOINTS TO BE WITHIN 10' OF EDGE OF WATER MAIN EXCEPT AS APPROVED BY CITY ENGINEER AND DIVISION OF DRINKING WATER.

CITY OF LINCOLN
ENGINEERING DEPARTMENT

SANITARY SEWER AND WATER OR RECYCLED WATER MAIN SEPARATION DETAILS

REVISIONS:	DATES:	APPROVED:
		CITY ENGINEER DATE

SCALE: NONE
DATE: SEPTEMBER 2019
DRAWN BY: C.G.

SS-10

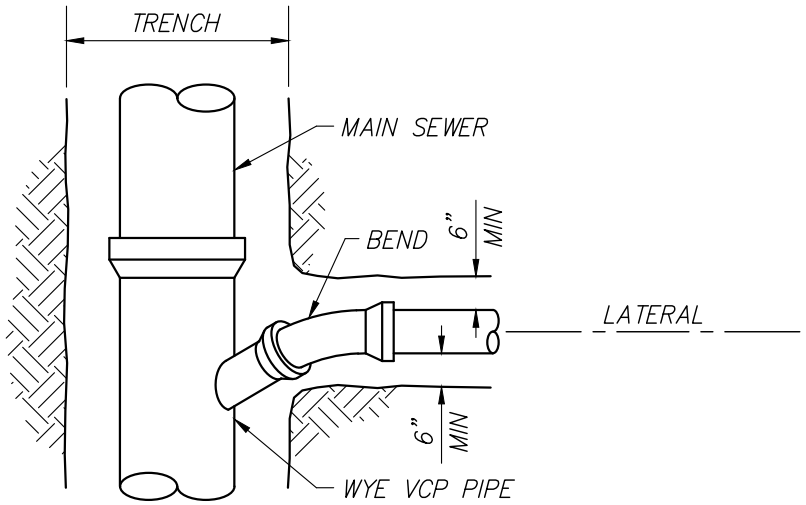

PLAN

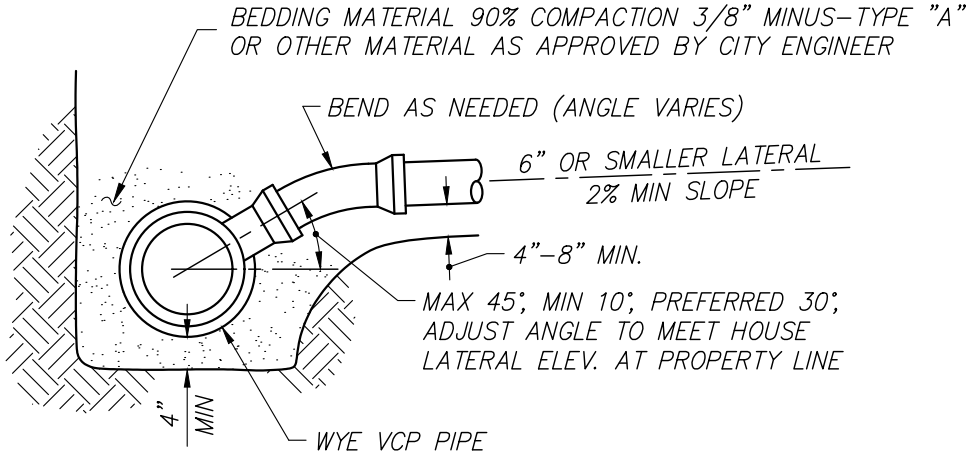

ELEVATION

NOTES:

1. WYES AT VERTICAL ANGLES GREATER THAN 45°, ONLY AT PROPERTY LINE (SEE DETAIL SS-7)
2. EXTRA CARE SHALL BE TAKEN IN PLACING & COMPACTING MATERIAL FOR WYE SUPPORT, TAMP UNDER & AROUND ALL FITTINGS.
3. TYPE "A" 3/8" MINUS PER SEWER TRENCH DETAIL SS-1. (24" ABOVE PIPE IF TYPE D MATERIAL IS USED IN INTERMEDIATE ZONE).

CITY OF LINCOLN
ENGINEERING DEPARTMENT

SEWER WYE DETAIL

REVISIONS:	DATES:	APPROVED:
		CITY ENGINEER DATE

SCALE: NONE
DATE: SEPTEMBER 2019
DRAWN BY: C.G.

SS-11

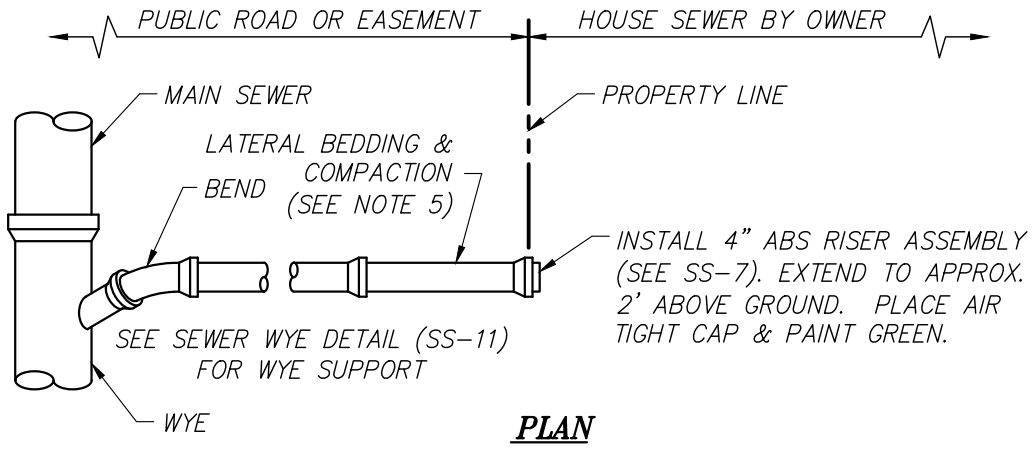

PLAN

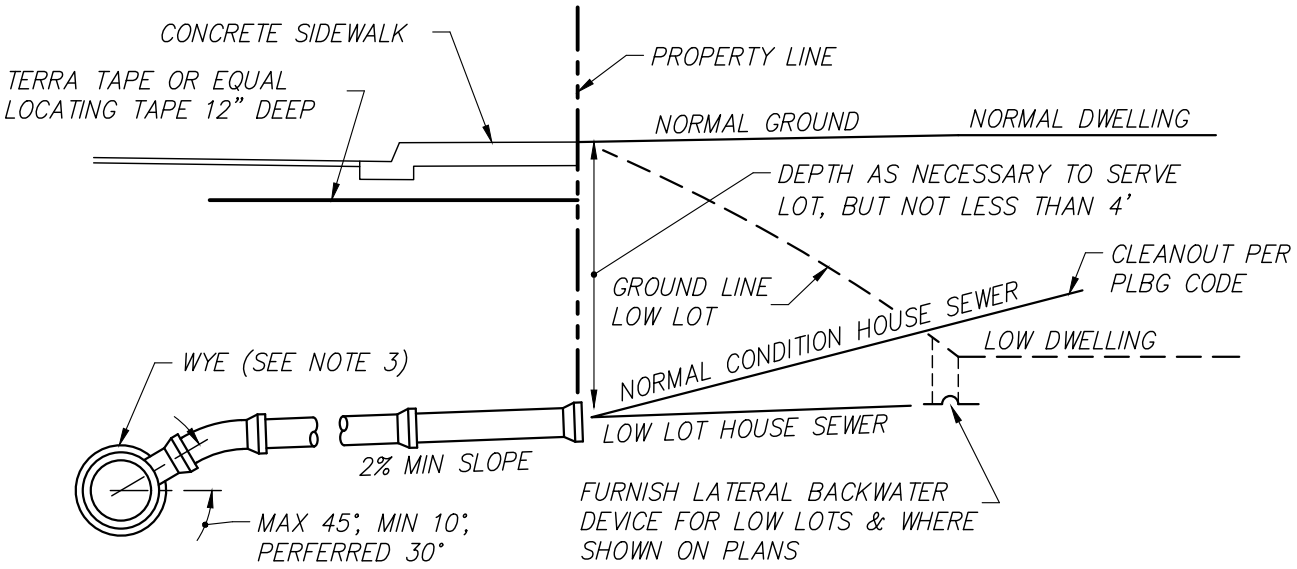

ELEVATION

NOTES:

1. LOCATE LATERAL IN ACCORDANCE WITH SEWER AND WATER OR RECYCLED WATER SEPARATION DETAIL. (SEE DETAIL SS-10)
2. LARGER THAN 6" SHALL BE CONNECTED TO MAIN WITH A MANHOLE.
3. SEE SEWER WYE DETAIL SS-11.
4. FIELD CUT PIPE JOINTS SHALL USE FERNCO OR EQUAL MOLDED COUPLING.
5. BEDDING AND PIPE BACKFILL TO BE 3/8" MINUS. 24" ABOVE PIPE IF TYPE "D" MATERIAL IS USED IN INTERMEDIATE ZONE

CITY OF LINCOLN
ENGINEERING DEPARTMENT

SEWER LATERAL DETAIL

REVISIONS:	DATES:	APPROVED:
		CITY ENGINEER DATE

SCALE: NONE
DATE: SEPTEMBER 2019
DRAWN BY: C.G.

SS-12

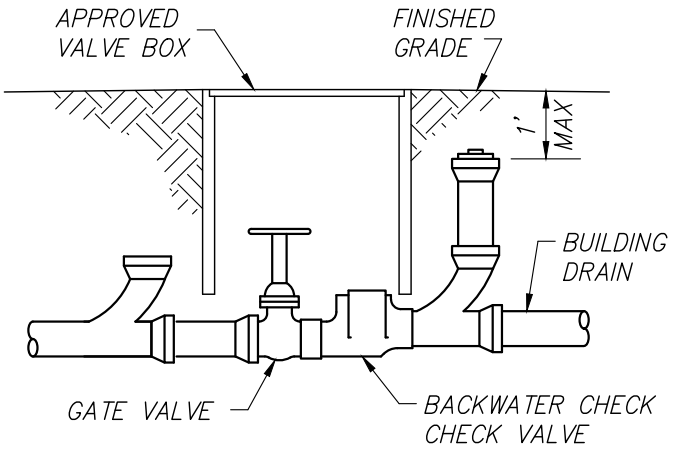

REQUIRED WHEN OVERFLOW SYSTEM CANNOT BE USED WITHOUT POSSIBLE SERIOUS PROPERTY DAMAGE

BACKWATER CHECK VALVE & SHUTOFF SYSTEM

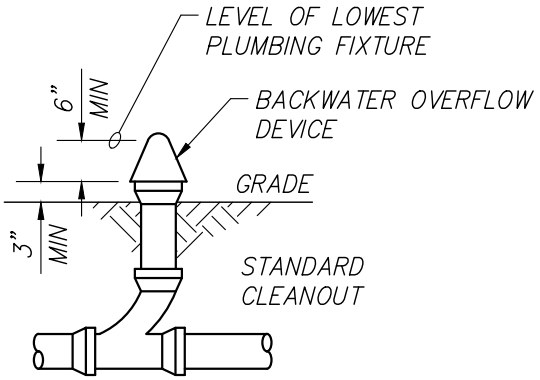

LOCATE WHERE SEWAGE CAN OVERFLOW WITHOUT SERIOUS PROPERTY DAMAGE

OVERFLOW SYSTEM

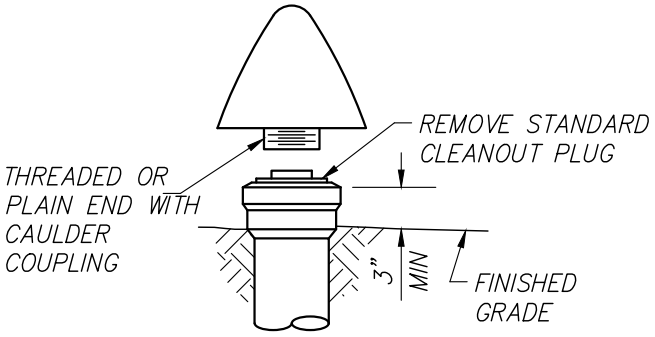

BACKWATER OVERFLOW DEVICE

NOTES:

1. USE BACKWATER OVERFLOW SYSTEM WHEN THE LEVEL OF THE LOWEST PLUMBING FIXTURE IS AT OR BELOW A POINT 18" ABOVE THE LEVEL OF THE NEAREST UPSTREAM SEWER STRUCTURE (MANHOLE OR RODHOLE).
2. CLEANOUT SIZE SHALL BE EQUAL TO HOUSE LATERAL SIZE.

CITY OF LINCOLN
ENGINEERING DEPARTMENT

BACKWATER OVERFLOW SYSTEM AND STANDARD 4" CLEANOUT DETAIL

REVISIONS:	DATES:	APPROVED:
		CITY ENGINEER DATE

SCALE: NONE
DATE: SEPTEMBER 2019
DRAWN BY: C.G.

SS-13

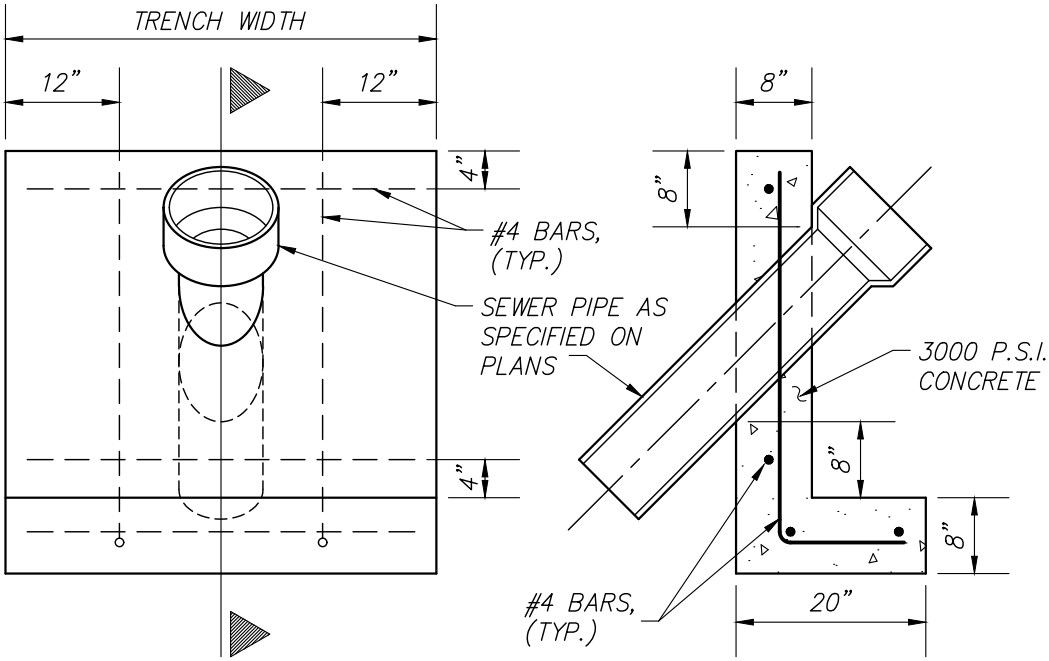

ELEVATION ***SECTION***

NOTES:

1. *USE AS SHOWN ON PLANS OR DIRECTED BY CITY ENGINEER.*
2. *TYPICAL REQUIREMENT ON SLOPES OF > 30%.*

CITY OF LINCOLN
ENGINEERING DEPARTMENT

ANCHOR DETAIL

REVISIONS:	DATES:	APPROVED:
		CITY ENGINEER DATE

SCALE: NONE
DATE: SEPTEMBER 2019
DRAWN BY: C.G.

SS-14

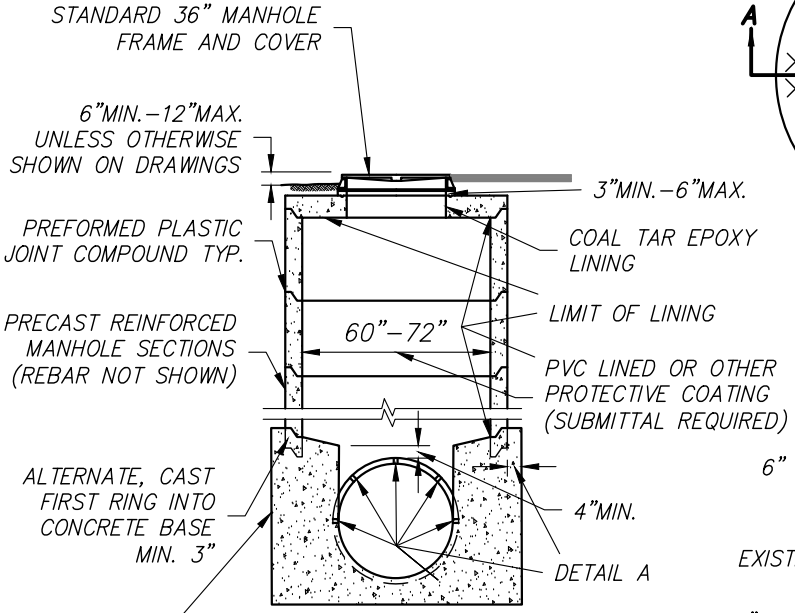

MANHOLE DETAIL (TYPE B)

CONCRETE BASE. POUR AGAINST UNDISTURBED MATERIAL OR FORM. IF FORMS ARE USED, THE VOID BETWEEN THE CONCRETE AND THE UNDISTURBED MATERIAL SHALL BE BACKFILLED WITH 1–1/2" MAX. ROCK TO THE TOP OF THE BASE.

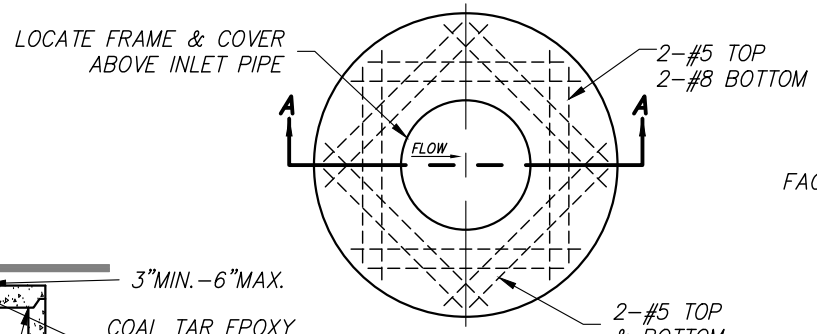

PLAN

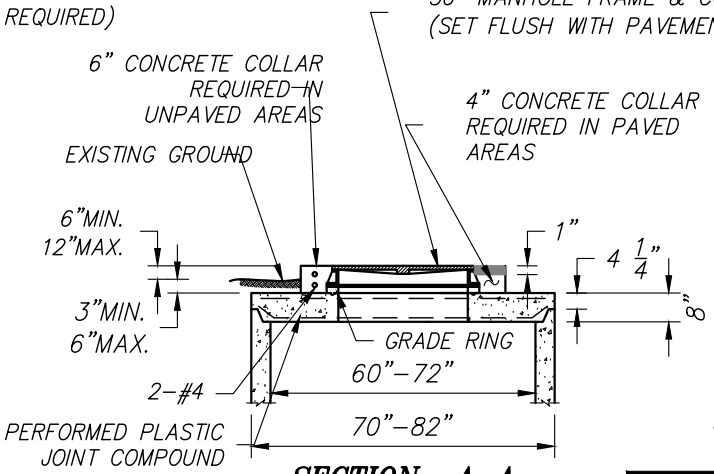

SECTION A–A

INSTALL 5 VCP PLUGS IN RCP AT DOWNSTREAM END OF MANHOLE 12" FROM INSIDE EDGE OF MANHOLE

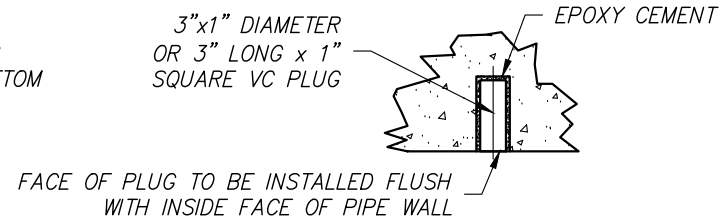

DETAIL A

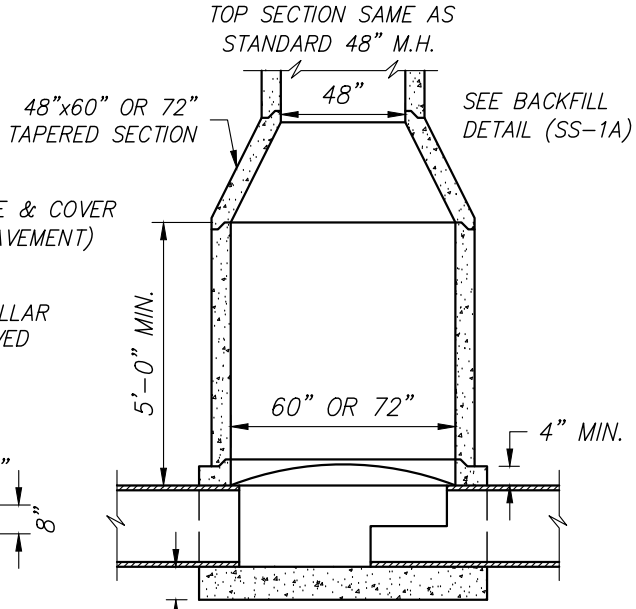

STANDARD MANHOLE
(TYPE A)

NOTES:

1. CLASS A CONCRETE SHALL BE USED FOR MANHOLE BASES.
2. PIPE MAY STOP AT INSIDE FACE OF MANHOLE OR MAY BE CONTINUOUS THRU MANHOLE. IF PIPE LAID CONTINUOUS, TOP HALF SHALL BE BROKEN AWAY AFTER BASE IS POURED.
3. JOINTS FOR THE BARREL SECTION SHALL BE TONGUE AND GROOVE. ALL JOINTS MUST EITHER BE MADE WITH PREFORMED PLASTIC SEALING GASKETS OR BY BUTTERING THE JOINT SPACE WITH MORTAR.
4. CONNECTION OF THE PIPE TO THE MANHOLE MAY BE MADE USING A RESILIENT CONNECTOR CONFORMING TO ASTM STANDARD C923 SUCH AS KOR–N–SEAL, A–LOK, OR EQUAL.
5. 60" MANHOLE FOR PIPE DIAMETER TO 36", 72" MANHOLE FOR PIPE DIAMETER TO 48".
6. SEE STD DET SS–1A FOR BACKFILL REQUIREMENTS.

REVISIONS:	DATES:	APPROVED:
		CITY ENGINEER DATE

CITY OF LINCOLN
ENGINEERING DEPARTMENT

STANDARD
60" & 72" SEWER MANHOLES

SCALE: NONE
DATE: SEPTEMBER 2019
DRAWN BY: C.G.

SS-15

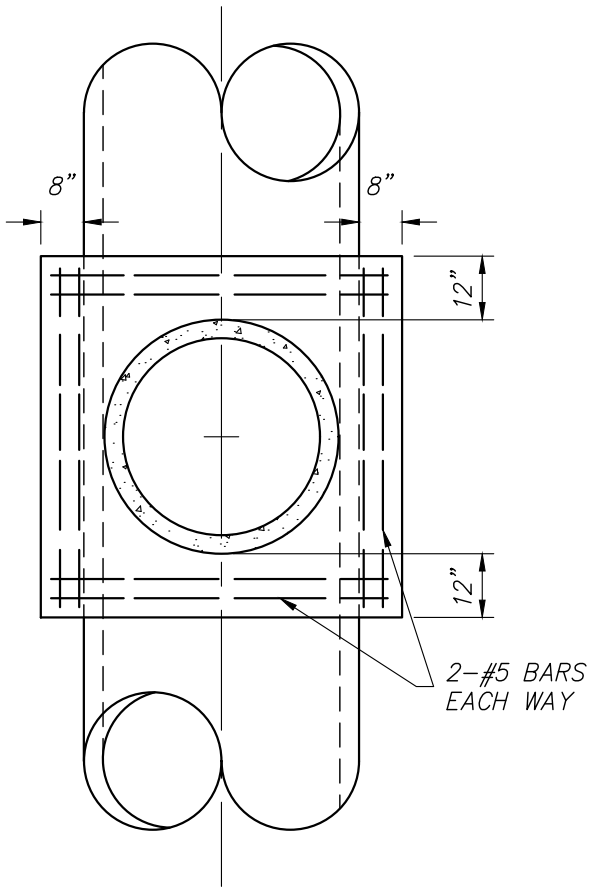

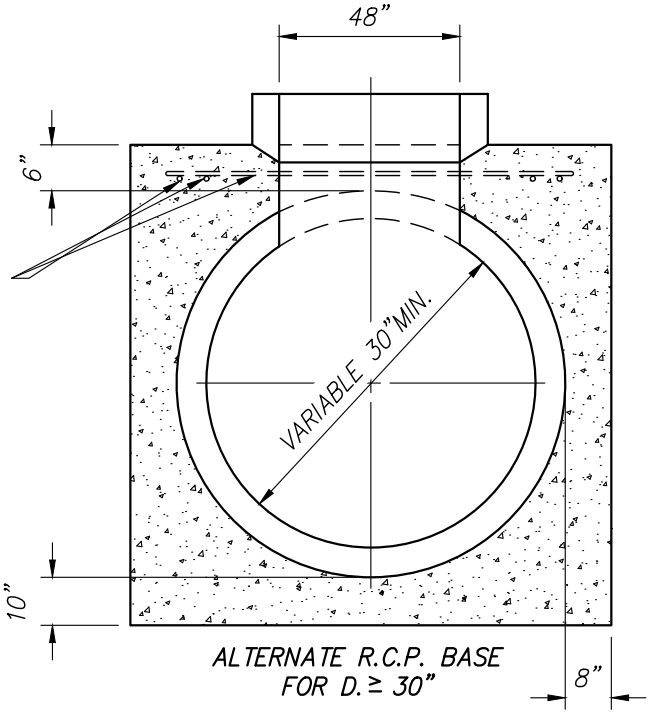

ALTERNATE R.C.P. BASE
FOR D. ≥ 30"

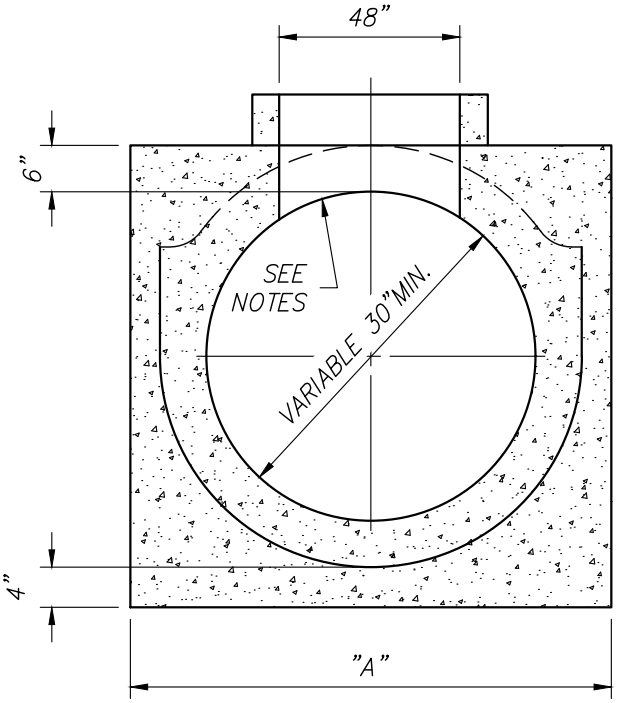

CAST-IN-PLACE PIPE ONLY
(SEE NOTES)

SECTIONS

NOTES:

1. REMOVE CONCRETE IN MANHOLE OPENING AND CONSTRUCT RISER BASE WHILE CONCRETE IS STILL FRESH.

2. PLACE RISER SECTION AFTER CONCRETE HAS SET.

3.

PIPE DIA.	30"	36"	42"	48"	54"
"A"	5'-0"	5'-0"	5'-0"	5'-8"	6'-3"
PIPE DIA.	60"	66"	72"		
"A"	6'-10"	7'-5"	8'-0"		

CITY OF LINCOLN
ENGINEERING DEPARTMENT

SADDLE MANHOLE

REVISIONS:	DATES:	APPROVED:
		CITY ENGINEER DATE

SCALE: NONE
DATE: SEPTEMBER 2019
DRAWN BY: C.G.

SS-16

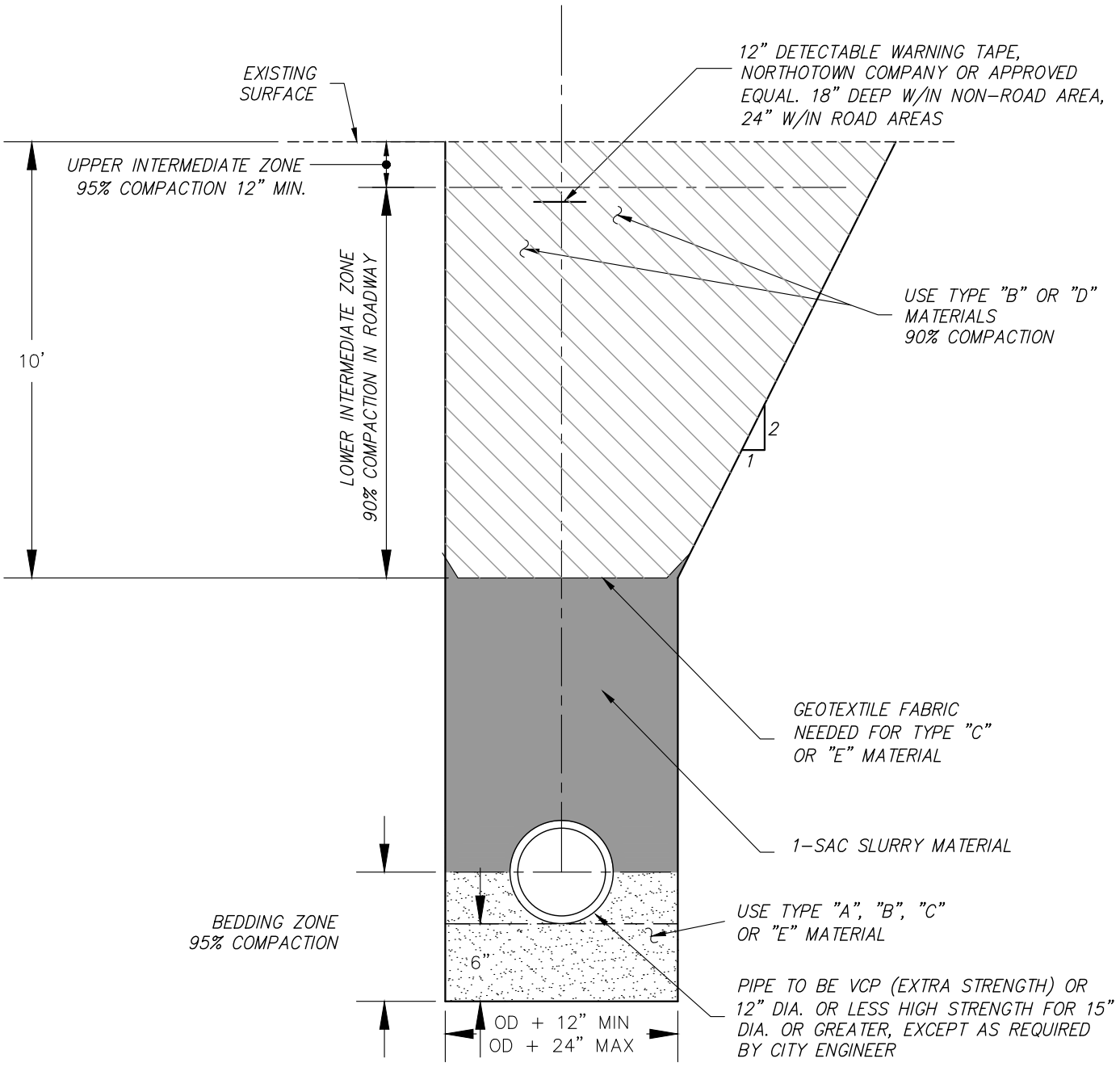

NOTES:

FOR NOTES, BEDDING AND MATERIAL SEE SS-1, SEWER TRENCH DETAIL.

CITY OF LINCOLN
ENGINEERING DEPARTMENT

DEEP SEWER TRENCH DETAIL

REVISIONS:	DATES:	APPROVED:
		CITY ENGINEER DATE

SCALE: NONE
DATE: SEPTEMBER 2019
DRAWN BY: C.G.

SS-17

SECTION 6
STORM DRAINAGE (SD)

6-1 General SD-1
6-2 Construction Staking SD-2
6-3 Channel Lining Installation SD-2
A. Surface Preparation SD-2
B. Reinforcement SD-2
C. Construction Joints SD-2
D. Expansion Joints SD-2
E. Contraction Joints SD-3
F. Weep Holes SD-3
G. Cutoff Walls SD-3
H. Finishing SD-3
I. Curing SD-3
6-4 Catch Basin Installation SD-4
A. Backfill SD-4
B. Compaction SD-4
6-5 Manhole Installation SD-5
A. Bases SD-5
1. Precast SD-5
2. Cast-in-Place SD-5
B. Cones SD-5
C. Joints SD-6
1. Mortar Application SD-6
2. Plastic Sealing Compound Application SD-6
D. Connections SD-6
E. Grade Rings SD-6
F. Top of Manhole In Pavement SD-6
G. Top of Manhole Off-Site SD-6
H. Top of Manhole in Landscaped Area SD-6
I. Adjusting Existing Manhole Frames SD-7
J. Manhole Structure Backfill SD-7
6-6 Trench Work SD-7
A. Existing Pavement SD-8
B. Water in Trench SD-8
C. Unsuitable Trench Bottom SD-9
D. Unsuitable Trench Bottom SD-9
E. Temporary Surfacing SD-9
F. Open Trench SD-9
G. Trench Width SD-10
6-7 Pipe Bedding SD-10
A. Pipe Support SD-10
B. Shovel Slicing SD-10
C. Bell Holes SD-10

6-8 Concrete Cradles, Arches & Encasements SD-10
A. Pipe Support SD-10
B. Concrete SD-10
6-9 Pipe Installation SD-10
A. Manufacturers Recommendations SD-10
B. Pipe Layout Tolerances SD-11
C. Placing Pipe SD-11
D. Joining Pipe SD-11
E. Covering Pipe SD-11
F. Reinforced Concrete Pipe SD-11
G. Laying and Backfill of Polyvinyl Chloride (PVC) and ..... High-Density Polyethylene (HDPE) Pipe SD-11
H. Closed Circuit Television Inspections (CCTV) SD-12
6-10 Pipe Backfill QA/QC SD-13
A. Performance Based QA/QC (Non-Testable Materials) SD-13
B. Design Based QA/QC (Testable Materials) SD-13
C. Trench Backfill Materials SD-14
D. Pipe Zone Backfill SD-15
E. Compaction test Methods SD-15
F. Testing Frequencies SD-15
G. Warning Tape SD-16
H. Markings in Unpaved Areas SD-16
6-11 Materials SD-16
A. Backfill Materials SD-16
B. Catch Basins SD-16
C. Alternative PVC Catch Basins SD-16
D. Lined Channels SD-17
1. Air Blown Mortar SD-17
2. Concrete SD-17
3. Curing Compound SD-17
4. Expansion Joint Filler SD-17
5. Grouted Cobbles SD-17
6. Weep Holes SD-17
7. Welded Wire Fabric SD-17
E. Manholes SD-17
1. Bases SD-17
2. Cones SD-17
3. Joints SD-17
4. Manhole Frames and Covers SD-17
5. Mortar SD-18
6. Pipe Connections SD-18
F. Outlet and Inlet Structures SD-18
G. Slurry Cement Backfill SD-18
H. Storm Drain Pipe SD-18
1. Acrylonitrile-Butadiene-Styrene (ABS) SD-18
2. High Density Polyethylene Pipe (HDPE) SD-18
3. Polyvinyl Chloride Pipe (PVC) SD-19
4. Precast Reinforced Concrete Pipe (RCP) SD-19
5. Alternate Pipe Materials SD-19
6-12 Storm Drainage Details SD-20

SECTION 6
STORM DRAINAGE (SD)

6-1 **GENERAL -** All improvements within the City of Lincoln will be approved and permitted by the City, and will conform to the City of Lincoln Design Criteria & Procedures Manual. Drainage improvements include culverts, catch basins, lined channels, manholes, outlet structures and storm drain pipe. This work in the City's rights-of-way will be installed in strict accordance with the approved project improvement plans, these Public Facilities Improvement Standards, and certain parts of the latest editions of the Caltrans Standard Plans and Caltrans Standard Specifications.

Should conflicts arise between documents, the approved project improvement plans will govern over these Public Facilities Improvement Standards. These Public Facilities Improvement Standards will govern over the Caltrans Standard Specifications. In the event of conflict between applicable documents and/or plans, the most restrictive will prevail.

The manufacturer's guidelines for all materials to be used on the project will be present at the construction site at all times for reference.

Developers and Contractors will comply with all applicable City, County, State, and Federal laws and regulations relating to construction of the improvements as required.

If the City Engineer determines that any work on private or public property constitutes a hazard to the health, safety, or welfare of the public; endangers property; adversely affects the safety, use or stability of adjacent property; an overhead or underground utility, or a public way, watercourse or drainage channel; or could adversely affect the air quality; or the water quality of any water bodies or water courses; the City Engineer may issue a stop work notice to the owner of the property upon which the condition is located, or other person or agent in control of such property. Upon receipt of such stop work notice, the recipient will, within the period specified therein, stop all work, obtain any necessary permits and conform to the requirements identified in the stop work notice. The City Engineer may require the submission of plans or other reports, detailed construction recommendations, studies, or other engineering data prior to and in connection with any corrective or proposed work or activity.

All improvements within the City of Lincoln will be performed by a contractor licensed in accordance with the California Contractors State License Law, Business and Professions Code Section 7000 et seq.

All persons, firms, partnerships, or corporations doing business of any nature in the

City of Lincoln will have a current Business license as stated in Chapter 5.04-License Tax, City of Lincoln Municipal Code. This includes developers, engineers, and contractors.

Refer to the City of Lincoln's Design Criteria & Procedures Manual for design information, the West Placer Storm Water Quality Design Manual, and the Placer County Flood Control District Storm Water Management Manual for general hydrologic guidelines and rainfall Depth Duration Frequency data. All modeling and signing to be approved by the City Engineer prior to approval of development drawings.

All projects will be in compliance with the State water quality requirements for erosion and sedimentation control at all times.

6-2 **CONSTRUCTION STAKING -** Construction staking will be provided for all drainage improvements. Such staking will provide the station and offset, as well as the cut to the nearest 0.01-foot. Stakes will be provided at a minimum of every 50-feet in tangent sections and every 25- feet in curved sections. The City Engineer will be provided with a set of cut sheets prior to construction.

6-3 **CHANNEL LINING INSTALLATIONS -** Channel lining installations will conform to Standard Details SD-18 and SD-19 and to these specifications:

A. Surface Preparation - The surfaces of the areas to be lined will be evenly graded to the lines and grade and sections as indicated on the approved project improvement plans. The surfaces will be moistened thoroughly to prevent moisture from being drawn from the freshly placed lining. All surfaces on which lining is to be placed will be free from water, mud and debris and will be firm enough to prevent contamination of the fresh lining by earth or other foreign material. Prior to placing any lining, the Contractor will verify line and grade of the excavated channel.

B. Reinforcement - Welded wire fabric will be embedded in the concrete so that it will be a minimum of 1-inch clear from either face of the concrete, unless otherwise noted.

C. Construction Joints - Will be square and edged with a ¼-inch radius edging tool. The edge will be thoroughly wetted before the next section of lining is placed. Construction joints will be constructed whenever the operation is halted for a period exceeding 30-minutes. Welded wire fabric reinforcing will extend through the construction joint.

D. Expansion Joints - Transverse expansion joints will be edged with a ¼- inch radius-edging tool and will be constructed at intervals of not more than 50-feet. All expansion joints will be filled with remolded expansion joint filler material.

E. **Contraction Joints -** Transverse contraction joints will be constructed as intervals of 10-feet and will be scored by troweling a groove 5/8-inch in depth and ¼-inch in width. All joints will be true to a uniform line and neat appearance.

F. **Weep Holes -** On channels with side lining extending more than 18-inches vertically above the channel toe, weep holes will be constructed at intervals of 10-feet, midway between contraction joints on each side of the channel. The weep hole elevation will be 12-inches above the adjacent toe of slope.

   The holes will be backed by a minimum of 1-cubic-foot of aggregate material tied in a burlap bag. The aggregate will extend at least 6-inches above and below and to each side of the weep hole, and at least 10-inches into the side slope. The side and back of the burlap sack will be protected from being coated by mortar or concrete during the lining placing operation. On the day following the lining placement, each weep hole will be rodded to assure it has not been blocked. The weep hole will then be cut to fit the channel slope.

G. **Cutoff Walls -** Cutoff walls will be constructed around the perimeter at each end of the channel lining and at all locations where the new lining meets structures or existing lining, and at all other locations shown on the approved plans. The cutoff walls will be a minimum of 6-inches thick and 18-inches in depth, as measured from the surface of the lining. The welded wire fabric will be bent down into the cutoff walls. Written approval from the Director of Public Works/City Engineer will be required for all cutoff walls, locations, and details prior to construction.

H. **Finishing -** Poured-in-place concrete lining will be spread and tamped until it is thoroughly compacted and mortar flushes to the surface. After striking-off to grade, the concrete will be hand floated with wooden floats not less than 4-inches in width and 30-inches in length. The entire surface will then be broomed with a fine texture hair push-broom to produce a uniform surface. Brooming will be done when the surface is sufficiently set to prevent scarring and will be accomplished by drawing the broom parallel to the expansion and contraction joints.

   All mortar blown channel lining will be placed to the required depth as early as practicable. The surface will then be checked with a straightedge, and any low spots or depressions will be brought to the proper grade by placing additional mortar in such a manner that the finished surface will be reasonably smooth and uniform. Any base material will then be struck off with a finishing tool to provide a finished equivalent to a broomed concrete surface.

I. **Curing -** Channel lining will be sprayed uniformly with a white pigmented or clear curing compound. The method and rate of application will conform to Section 90 of the Caltrans Special Provisions.

6-4 **CATCH BASIN INSTALLATION -** Catch basin installations will conform to Standard Details SD-3 through SD-10 and to provisions in Sections 51 and 52 of the Caltrans Standard Specifications. Catch basins located in the right-of-way will be precast concrete or cast-in-place concrete. Catch basins located outside the right-of-way may be PVC, precast concrete, or cast-in-place concrete.

The interior of the concrete catch basins will have an ordinary surface finish; rock pockets will be grouted and brushed; exposed top surfaces will have a Class I Surface Finish. The specified PVC surface drainage inlet will be installed using conventional flexible pipe backfill materials and procedures. The backfill material will be Class 2 AB material as defined in ASTM D2321. The surface drainage inlets will be bedded and backfilled uniformly in accordance with ASTM D2321. The drain basin body will be cut at the time of the final grade so as to maintain a one piece, leak proof structure. No brick, stone or concrete block will be used to set the grate to the final grade height. For H-20 Load rated installations, an 8-inch to 10-inch thick concrete ring will be poured under the grate and frame as recommended by details provided from the manufacturer.

A. Backfill - Only Caltrans Class 2 Aggregate (AB) Rock will be used as backfill for a minimum horizontal distance of 2-feet around all catch basins constructed within the City rights-of-way. The Caltrans Class 2 AB Rock will extend vertically upward from the pipe zone to the overlying asphalt concrete (AC) pavement layer. The backfill will be placed and moisture conditioned in maximum 12-inch-thick loose vertical lifts (layers) and then compacted with walk-behind jumping-jack type compactor equipment.

B. Compaction - The backfill will be tested in place to determine its moisture, density and percent relative compaction using these American Society for Testing and Materials (ASTM) field and laboratory test methods: D1557 (Modified Proctor compaction curve); D2922 (Standard test method for in place density and unit weight of soil and soil-rock mixtures by the Shallow Depth Nuclear Method); D3017 (Standard test method for in place water content of soil and soil-rock mixtures by the Shallow Depth Nuclear Method).

The catch basin backfill will be compacted according to these vertical requirements in the table below:

Compaction		
Pipe Zone	Depth of Zone	Relative Compaction
Roadway Aggregate Base	Varies	95%
Upper Intermediate Zone	12" Below Aggregate Base	90%
Lower Intermediate Zone	12" below aggregate base to 12" above pipe	90%
Pipe Zone	12" above pipe to pipe bottom	90%
Bedding Zone	Pipe bottom to 6" below pipe	95%

6-5 MANHOLE INSTALLATION

A. Bases

1. **Precast -** Precast bases will be placed on a foundation of ½- inch minus crushed rock, a minimum of 4-inches thick, compacted to 90% relative compaction. Elevation differentials of inlets and outlets will conform to the approved improvement plans. Openings in the base will align true with all inlet and outlet pipes. Stubs or couplings provided in precast bases will be of the same material as the pipe to which they connect, unless otherwise approved in writing by the City Engineer.

2. **Cast-in-Place -** The cast-in-place base portion will not be placed higher than 6-inches above the outside tops of the main incoming and outgoing pipes. Minimum and maximum wall thickness for the cast-in-place sections will conform to this table:

Manhole Diameter	Minimum Wall Thickness	Maximum Wall Thickness
48-inches	5-inches	7-inches
60-inches	6-inches	8-inches
72-inches	7-inches	9-inches

Inside diameters of cast-in-place base portions will equal the diameter of the manhole specified. Standard precast manhole riser sections and/or cones will be placed above the cast-in-place section to bring the manhole rim to finish grade.

Concrete in the cast-in-place portion will be placed neat against undisturbed earth.

B. Cones - Cone tops will be placed within 6-inches to 18-inches of final street grade. Where depth is insufficient for cones, flat slab tops will be used. Lifting

rings in precast cones will be plugged with dry packed mortar.

C. **Joints -** Joints in precast manhole sections will be made with either mortar or plastic sealing compound.

1. **Mortar Application -** All joint surfaces and the face of the manhole base will be thoroughly deemed and wetted before applying mortar. Both the inside and outside of mortared joints will be plastered with mortar and the inside brushed to a smooth finish with a wet brush. Special precautions will be taken to ensure that the entire joint space is filled with mortar and is watertight.

2. **Plastic Sealing Compound Application -** All joint surfaces and the face of the manhole base will be thoroughly cleaned before applying plastic sealing compound. The sealing compound will be protected from dirt during application. Ends of the compound will be joined end-to-end and not joined by overlapping. Sufficient compound will be used to cause a visual "squeeze-out" of the compound material when adjacent sections are seated. Squeeze-out material on the inside of the manhole will be neatly trimmed flush with the inside surface.

D. **Connections -** Pipe connections to drainage manholes will be made so that the pipe is flush with the inside face of the manhole. These connections will be finished so that entrances are smooth. Unless the manhole is cast around the pipe, connections will be made with dry packed cement mortar. Pipe connections will not be made into the cone section of the manhole unless shown on the approved plans.

E. **Grade Rings -** Grade adjustments will be made using precast grade rings. Precast rings will be a minimum of 2-inches in height and a maximum of 12-inches in height.

F. **Top of Manhole in Pavement -** Frames and covers will be set flush with finish grade, unless otherwise noted on the approved plans. Per the Standard Details, a 12-inch deep by 12-inch wide concrete collar with a #4 rebar ring will be placed around the casting, covered by 2-inches of asphalt concrete paving.

G. **Top of Manhole Off-Site -** Manholes placed in off-site, unimproved areas will be constructed with the top of the casting cover a minimum of 12-inches above the final surrounding grade. A minimum 12-inch wide Class "A" concrete collar with a #4 rebar ring will be constructed around the casting and 6-inches below finish grade.

H. **Top of Manhole Landscape Area -** Manholes placed in landscape areas adjacent to City improvements will be constructed with the top of the casting cover a minimum of 6-inches above the final surrounding grade. A minimum 12-inch wide Class “A” concrete collar with a #4 rebar ring will be constructed

around the casting and 6-inches below finish grade.

I. **Adjusting Existing Manhole Frames -** The frame will be supported above the grade ring or dome by spacers, or by suspending with timber and wires. After the concrete collar is poured, any space between the frame and grade ring, or dome, will be filled with non-shrink mortar, the inside wall of the riser finished/wet-brushed.

J. **Manhole Structure Backfill -** These notes and Detail SS-1A apply unless noted otherwise on the approved project improvement plans:

1. Only Caltrans Class 2 Aggregate (AB) Rock will be used as backfill to a minimum horizontal distance of 5 feet around all manhole structures constructed within the City right-of-ways. The Caltrans Class 2 AB Rock will extend vertically upwards from the pipe zone to the overlying asphalt concrete (AC) pavement layer. Manholes installed at a depth greater than 5-feet will be backfilled with Type "E" Material to a depth of 5-feet below finished grade and to a horizontal distance of 5 feet around the manhole. Backfill between the Type "E" Material and roadway structural section will be Caltrans Class 2 Aggregate Base as described above.

2. The manhole structure backfill will be moisture conditioned to within ± 3 percentage points of the ASTM D1557 optimum moisture content, placed in maximum 12-inch-thick loose vertical lifts (layers), and then compacted with walk behind jumping jack type compactor equipment.

3. The manhole structure trench backfill will be tested in place to determine its moisture, density and percent relative compaction using the following American Society for Testing and Materials (ASTM) field and laboratory test methods: D1557 Modified Proctor compaction curve, D2922 density (nuclear method), D3017 moisture (nuclear method).

4. The manhole structure backfill will be compacted to a minimum relative compaction of 95 percent in the underlying bedding zone, and in the surrounding 5-foot horizontal zone extending from the bedding zone top to the bottom of the overlying AC pavement layer.

6-6 **TRENCH WORK -** Earthwork required to construct storm drain facilities will be performed to the lines and grades shown on the approved project improvement plans. At all times, the trench and work area surrounding the trench will be kept in a safe manner to adequately protect the public and the workers. The person designated as the project "superintendent" will be onsite during all work activity. The specified trench width will be maintained to a height of one-foot over the top of the pipe for all trench wall geometry cross-sections including: vertical walls, steeped vertical walls, V-walls, and combined vertical-V-walls.

Prior to placing both trench backfill materials and pipes on the trench bottom subgrade surface, the trench bottom will be: relatively free of loose materials, have a relatively smooth appearance, have a relatively constant grade, and be firm and relatively unyielding.

The location of cut-off walls shown on the plans may be adjusted in the field if directed by the on-site geotechnical engineer and/or the City Engineer.

Refer to detail SD-29 and Section 6-10 of these Public Facilities Improvement Standards Section for additional information on trench materials.

A. **Existing Pavement** – When the trench is in an existing surfaced area, the pavement will be sawed or scored and broken ahead of the trenching operations. The pavement will be cut accurately on neat and parallel lines. Before the final asphalt concrete patch is placed, the edges of the asphalt concrete will be re-sawcut at least one-foot wider than the width of the trench ("T trench") to create a smooth parallel edge (see Standard Detail H-25). All cuts in Portland cement concrete pavements will be sawcut with approved equipment.

B. **Water in the Trench** – When water is encountered in the trench, the owner's/developer's geotechnical consultant will be contacted by the contractor to provide input to the City Engineer. The City requires that a dewatering work plan be prepared and submitted for review prior to implementation in areas where dewatering will be anticipated. The trench will be kept dry in a manner approved by the City Engineer until placement of the approved bedding material, laying and jointing of the pipe, and placement of the shading material has been completed and approved.

   The City will consider, on a case-by-case basis, the use of conventional, in-trench, sump-dewatering methods provided that the trench is backfilled with washed, crushed rock or equivalent to at least a height of 3-feet higher than the local ground water table or perched water whichever is at a higher elevation. The crushed rock may require wrapping with a geotextile filter fabric as determined by the owner's/developer's geotechnical consultant or required by City Engineer. Installation of ground water monitoring wells can be used to determine the elevation of the water table and/or perched groundwater.

   The owner's/developer's geotechnical consultant should develop a dewatering work plan for review and approval by the City Engineer or his/her designated representative prior to implementation. The City requires a dewatering system be designed and implemented in all areas where trenches will be excavated and native backfill will be placed below the local groundwater table and/or perched ground water. Installation of groundwater monitoring wells can be used to determine the elevation of the water table and/or perched groundwater. The dewatering system may include but is not limited to: drive well point screens and

vacuum extraction systems, or other dewatering methods. Use of in-trench sumps will not be allowed as the sole dewatering method.

The manner employed to dispose of water pumped from an excavation will be subject to the approval of the City Engineer and will conform to all water pollution constraints of the City and other agencies. Groundwater pumped from the trench will be disposed of in a manner to not cause injury to public or private property, or to constitute a nuisance or menace to the public.

C. **Unsuitable Trench Bottom** - If in the opinion of the owner's/developer's geotechnical consultant, or the City Engineer, the bottom of the trench is soft, yielding, or otherwise unsuitable as a foundation for the pipe, the unsuitable material will be removed to the depth necessary to provide a stable and satisfactory foundation. Three-quarter-inch (3/4") crushed rock will be placed in the trench to provide a stable foundation. The rock is in addition to the required pipe bedding used in the pipe zone. All rock will be wrapped with geotextile fabric (see standard detail SD-29, Type "C" Material).

D. **Steel Trench Plates** - Steel trench plates will not be used over open trench areas without the approval of the City Engineer. All steel plates will be adequately restrained to eliminate shifting. Trench plates do not eliminate the need for shoring when required. Temporary asphaltic plant mix ("cut-back") at least one-foot in width will be used for a transition on each edge of the plate. "Steel Plate Ahead" signs (W8-24) will be installed 200-feet on each side before the steel plate. The sign will only be mounted to an operable, lighted barricade for a maximum of 24-hours. The sign will be mounted to a 4-inch x 4-inch post if the placement of steel trench plates will exceed 24-hours.

E. **Temporary Surfacing** - In roadway areas, a temporary asphalt plant mix "cut-back" surface not less than 2-inches in thickness may be placed immediately after the top backfill has been completed and compacted. This temporary surface will be maintained at a level surface until removal. The temporary surfacing material will be removed just prior to placing the permanent surface material.

F. **Open Trench** - The trench will be in a safe condition at all times.

1. In roadway areas and locations accessible to the public, trenches will be excavated only as far in advance of pipe laying as can be backfilled in the same day. In addition, the maximum total length of open trench will be no more than 50-feet ahead of the pipe laying operation, or 50-feet behind the pipe laying operation. A trench in an existing roadway that is not to be regraded is defined as "open" until backfilled to existing grade.

2. In new developments and areas not accessible to the public, trenches will be excavated only as far in advance of pipe laying as can be backfilled in the

same day. In addition, the maximum total length of open trench will be no more than 300-feet ahead of the pipe laying operation, or 200-feet behind the pipe laying operation. A trench in an existing roadway that is not to be regraded is defined as "open" until backfilled to existing grade.

G. Trench Width - The trench bottom width will be 12-inches to 24-inches greater than the diameter of the pipe and will extend to 24-inches above top of pipe and will comply with Improvement Standard Detail SD-29 or as approved by the City Engineer.

6-7 **PIPE BEDDING -** Conform to Standard Detail SD-28, SD-29 and the following:

A. Pipe Support - Bedding will provide uniform and continuous support along the barrel of the pipe. The minimum depth of bedding material will be provided under the bell. Blocking of the pipe is not permitted. Loose material will be removed from the trench bottom and replaced with imported material.

B. Saturated Trench - Where a saturated trench condition is encountered, the trench wall and pipe will be lined with a geotextile fabric as shown on Standard Detail SD-29, and to the satisfaction of the City Engineer.

C. Bell Holes - Bell holes will be excavated per the manufacturer's recommendations. The minimum depth of bedding material will be provided under the bell. Care will be taken to ensure that the bell hole is no larger than necessary to accomplish proper joint assembly.

6-8 **CONCRETE CRADLES, ARCHES & ENCASEMENTS** - Concrete cradles, arches and encasements will only be allowed at the discretion of the City Engineer and will conform to the Standard Details and these Improvement Standards:

A. Pipe Support - The pipe will be placed in proper position on temporary supports consisting of concrete block or bricks. When necessary, the pipe will be rigidly anchored or weighted to prevent flotation when the concrete is placed.

B. Concrete - Concrete for cradles, arches or encasements will be placed uniformly along the pipe. Concrete placed beneath the pipe will be sufficiently workable to fill the voids without excessive vibration. The concrete will be allowed to cure and remain undisturbed for 24-hours prior to backfill and Compaction of the trench. Water will not be permitted to enter, seep, or run onto the concrete while curing.

6-9 **PIPE INSTALLATION -** Storm drainage pipe will be installed in accordance with the following provisions:

A. Manufacturers Recommendations – All installations will follow manufacturer's recommendations unless otherwise noted on the approved plans. The manufacturer's installation guide will be on the job site at all times.

B. Pipe Laying Tolerances - The pipes will be laid true to line and grade with allowed tolerances of 0.03-foot above or below the design grade and 0.10- foot left or right of the design alignment.

C. Placing Pipe - Pipe will be lowered into the trench and carefully placed on the bedding material with the use of lifting equipment and nylon straps. Chains are not permitted. The pipe will be laid carefully to the lines and grades shown without grade breaks, unless designed with such. At the discretion of the City Engineer or his/her representative, any pipe damaged during placement will be removed. If field conditions exist such that the pipe may not be laid to the specified grade, the approved plans will require revisions, approved by the City Engineer, prior to proceeding with construction.

D. Joining Pipe - Pipe sections will be closely jointed to form a smooth flowline. Care will be taken in placing the pipe and making field joints.

E. Covering Pipe - Improvements installed without proper inspection will be exposed and inspected as required by the City Engineer.

F. Reinforced Concrete Pipe - The pipe will be laid up-stream with the bell or groove end of the pipe placed up-stream. The pipe will be gasketed and mortared per manufacturers installation recommendations. The interior of the pipe will be kept clean as the work progresses. For mortared joint precast concrete pipe, the inside of each joint will be wet swabbed with a brush until no mortar protrudes on the inside of the pipe. After mortaring, the exterior of each pipe joint will be covered with a heavy paper membrane for protection. Pipe will not be laid, when, in the opinion of the City Engineer, trench or weather conditions are unsuitable. When excessive grout deposits are suspected in the pipe, a CCTV inspection is required.

G. Laying and Backfill of Polyvinyl Chloride (PVC) and High Density Polyethylene Pipe (HDPE) - Laying and backfill for these pipes will conform to Caltrans Standard Specifications, the manufacturer's recommendations, ASTM D2321 and Standard Detail SD-30, with these modifications:

1. Due to the lightweight characteristic of the pipe, extreme care will be taken to avoid displacing the pipe during the backfilling operation. Following placement of the pipe on the required bedding and to the required grade, the pipe will be stabilized in place with ballast. At a minimum, this will be accomplished by loading the pipe down slowly and carefully with piles of embedment material to a minimum of one foot above the pipe on each joint and midway on each length. The pipe will be kept centered in the trench during this operation.

2. The trench will then be backfilled with embedment material 6-inches to 12-inches above the pipe, prior to continuing with the trench backfill operations outlined in previous sections.

3. Pipe material will not change between manhole structures or between the last manhole structure and the discharge/inlet opening.

4. The pipe run between the last manhole structure and the discharge/inlet opening will be RCP. Pipe stubs will also be RCP.

5. **Pipe Testing -** A mandrel test will be conducted following completion of subgrade processing and compaction for curb gutter and sidewalk and asphalt concrete pavement. Placement of curb, gutter and sidewalk and asphalt concrete pavement (and related approved aggregate base) will not occur until the City Engineer has approved the mandrel test. The City Engineer will be present through the duration of the mandrel testing. The allowable deflection (reduction in vertical inside diameter) for all non-rigid pipe will be 7.5% maximum. The deflection will be tested by pulling a mandrel which is 92.5% of the inside pipe diameter through all installed pipe. The mandrel will be the "go/no-go" type and will be pulled per the manufacturer's recommendations without mechanical assistance. Prior to the mandrel test, the pipe will be thoroughly flushed and cleaned. At each location in which the mandrel cannot pass, the cause will be ascertained. Obstacles in the pipe will be removed. If it is determined that the deflection exceeds 7.5%, that a gasket has been mis-installed or that the pipe has been damaged due to trenching for another utility, the respective section of pipe will be re-bedded or removed, replaced and re-bedded using water tight repair couplings. A passing mandrel retest is required. At the contractor's discretion, any sections of non-rigid pipe not passing the mandrel test may be televised to ascertain the problem.

H. **Closed Circuit Television Inspections** - CCTV inspections will be performed by the Contractor. Costs for said inspection will be borne by the Contractor. Preliminary inspections may be performed by outside contractors, but will not be accepted by the City Engineer as an official record. The City Engineer, will be notified in writing 72-hours in advance of testing, without exception and will be present during television inspection. Without prior notification, the City reserves the right to reject all final T.V. inspections.

The storm drain system will be completely cleaned by an approved method prior to TV inspection. The storm drain system will be rejected if any of these conditions exist:

1. Standing water or sags greater than ½ - inch in depth.

2. Standing water in services.

3. Offset joints.

4. Cracked pipe.

5. Infiltration.

6. Protruding laterals.

Refer to the NASSCO Pipeline Assessment Standards for performance standards, including general information and definitions, quality standards, record keeping requirements, digital data formatting, appropriate screen text information and narrations and special CCTV procedures.

6-10 **PIPE BACKFILL QA/QC -** Pipe backfill will conform to Standard Details SD-28, SD-29 and these Improvement standards. Construction quality assurance and quality control (QA/QC) of all utility trench backfill will be performed by the owner's/developer's geotechnical engineering consultant. A performance-based QA/QC specification will be developed and used for placement and compaction of all non-testable trench backfill materials. A design-based QA/QC specification will be used for placement and compaction of all testable trench backfill material.

A. **Performance Based QA/QC (Non-Testable Materials)** – Non-testable trench backfill materials generally consist of locally derived mixtures of cobbles with a sandy matrix and/or breccia (volcanic rock) with a sandy matrix. The non-testable backfill materials should have a maximum particle size of 6-inches (greatest dimension). Use of non-testable trench backfill materials will be approved by the City on a case-by-case basis.

   A performance-based specification criteria will be used to evaluate the suitability of placed and compacted non-testable trench backfill materials. The property owner's/developer's geotechnical engineering consultant must prepare a work plan that describes a proposed site-specific performance-based specification for review and approval by the City prior to commencement of work. The work plan must include, but is not be limited to:

   1. Maximum loose lift (layer thickness) prior to compaction.

   2. Moisture content range to be achieved prior to compaction.

   3. Specified compaction equipment to be used.

   4. Minimum number of passes and coverage of specified compaction equipment.

B. **Design Based QA/QC (Testable Materials)** – Testable trench backfill materials generally consist of on-site native earth materials and imported earth materials that can be classified as soils according to the American Society for Testing and Materials (ASTM) Unified Soil Classifications System guideline procedures

(ASTM D2487 and D2488). These soils materials can be easily tested to determine if they meet the project design based on QA/QC specifications for percent relative compaction by the following ASTM test methods:
ASTM D1556, Standard test method for in place density and unit weight of soil and soil-rock mixtures by the Sand-Cone Method.

ASTM D2922, Standard test method for in place density and unit weight of soil and soil-rock mixtures by the Shallow Depth Nuclear Method.

ASTM D3017, Standard test method for in place water content of soil and soil-rock mixtures by the Shallow Depth Nuclear Method.

C. **Trench Backfill Material** – The City requires designed based construction QA/QC testing and observation services to be performed by the owner's/developer's geotechnical engineering consultant to document that trench backfills meet or exceed the minimum material properties and minimum relative percent compaction requirements of the City specifications. The general trench backfill material types, and relative percent compaction are presented below.

1. **Type "B" Material:** Class 2 Aggregate Base Rock per Caltrans Standard Specifications.

2. **Type "C" Material:** Material will consist of gravel or crushed rock. Material will be screened and non-washed with a minimum sand equivalent of 30 per CTM217. All material will be free of wood, roots, or other deleterious material. Material to be ½" minus for 12-inch pipe or smaller and ¾" for pipe greater than 12-inches in diameter. Groundwater conditions will require ¾" uniform crushed rock regardless of pipe diameter. Drain rock will be wrapped in a layer of geotextile fabric.

3. **Type "D" Material:** Crushed rock or soil-rock mixture (native) not to exceed 3 inches. Up to a 6 inch minus material may be used with special considerations and conditions approved by the City and Geotechnical Engineer. The material will be completely free of wood, roots, or other deleterious materials. Material not to be used within 24-inches of top of pipe without City Engineer's approval. Compaction will be by vibratory equipment or other approved devices. The City may require that the material be screened. A layer of geotextile fabric will be placed between the pipes and intermediate backfill zone. Material will only be used with geotechnical engineer's recommendation and with approval of the City Engineer.

4. **Type "E" Material:** A low strength, concrete slurry type backfill material made with a mixture of cement, fly-ash, and aggregate. To be used for

intermediate zone backfill at depths greater than 5-feet below finished grade. For reference, refer to Section 3-9 “Materials”.

D. **Pipe Zone Backfill** - For pipe 12-inches in diameter and smaller, no more than one-half of the pipe will be covered prior to shovel slicing (forcing rock backfill into the lower quadrants of the pipe) For pipe greater than 12-inches in diameter, no more than 6-inches will be covered prior to shovel slicing. At the discretion of the City Engineer or his/her representative, any pipe damaged during backfill will be removed.

   Shovel slicing will be witnessed by the City Engineer prior to shading the pipe. Proposed bedding, hunching and initial backfill (pipe backfill) materials will be approved by soils engineer and submitted to the City Engineer with sieve analysis and sand equivalent test results. California Test Methods will include 216, 217, 301, and 302. Compaction equipment will not make direct contact with the pipe.

E. **Compaction Test Methods** - The percent relative compaction of all testable trench backfill soil are determined by a combination of the following ASTM test methods:

   ASTM D1557, Modified Proctor Compaction Curve.

   ASTM D1556, In-place Soil Density by The Sand Cone Replacement

   Method.

   ASTM D2216, Soil Moisture Content by the Convection Oven Method.

   ASTM D2922, In-place Soil Density by Nuclear Method.

   ASTM D3017, In-place Soil Moisture Content by Nuclear Method.

   ASTM D4643, Soil Moisture Content by the Microwave Oven Method

   ASTM D4959, Soil Moisture Content by the Direct Heating Method.

F. **Testing Frequencies** - All field testable trench backfill materials, that are classified according to the Unified Soils Classification System using ASTM D2487 and D2488 procedures as CL, ML, SC, SM, GC, GM, GP and GW by ASTM tests D422 (Particle Size Gradation) and D4318 (Atterberg Plasticity Indices), will be tested for percent relative compaction using a minimum frequency of one compaction test per maximum 12-inch-thick loose lift (layer) per 250-linear-feet of trench length or material change, whichever condition requires the greatest number of tests. Generally, minimum requirements include 12-inch loose lifts; moisture conditioned to at or above optimum moisture and compacted with 8 to 10 passes/lifts by a sheepsfoot wheel mounted on a Cat 225 or equivalent. At the discretion of the City Engineer, City may require alternative compaction equipment combined with thinner lifts.

All field testable trench backfill materials, that are classified according to the Unified Soils Classification system using ASTM D2487 and D2488 procedures as CL, CH, ML and MH by ASTM tests D422 (Particle Size Gradation) and D4318 (Atterberg Plasticity Indices), should be tested for percent relative compaction using a minimum frequency of one compaction test per maximum 12-inch-thick loose lift (layer) per 100-linear-feet of trench length or material change, which ever condition requires the greatest number of tests.

G. **Warning Tape** - A 12-inch wide metallic backfill tape with the warning "Buried Storm Drain" will be placed in the trench lines of all mains and services, 24-inches above the top of pipe within road areas and 18" above the top of pipe within non-road areas.

H. **Markings in Unpaved Areas** - Mains in unpaved areas will be marked every 125 lineal feet with a green composite utility marker with a decal stating "Caution Buried Storm Drain". Mains in landscaped areas will be delineated with a brass marker set in an 8-inch diameter concrete cylinder. The brass marker will state "City of Lincoln Storm Drain".

6-11 MATERIALS

A. **Backfill Material** - All drain pipe backfill material will conform to Standard Detail SD-29.

B. **Catch Basins** - All catch basins will conform to Standard Details SD-3 to SD-10. Concrete to be Class "A", reinforcing steel to conform to provisions in Section 52 of the Caltrans Standard Specifications.

C. **Alternative PVC Catch Basins** - Th drain basins required will be manufactured from PVC pipe stock, utilizing a thermo-molding process to reform the pipe stock to the specified configuration. The drainage pipe connection stubs will be manufactured from PVC pipe stock and formed to provide a watertight connection with the specified pipe system. This joint tightness will conform to ASTM D3212 for joints for drain plastic pipe using flexible elastomeric seals. The pipe bell spigot will be joined to the main body of the drain basin or catch basin. The pipe stock used to manufacture the main body and pipe stubs of the surface drainage inlets will meet the mechanical property requirements for fabricated fittings as described by ASTM D3034. The grates furnished for all surface drainage inlets will be ductile iron grates for sizes 8-inch, 10-inch, 12-inch, 15-inch, 18-inch, 24-inch and 30-inch (12-inch and 15-inch frames are cast iron) will be made specifically for each basin so as to provide a round bottom flange that closely matches the diameter of the surface drainage inlet. Grates for drain basins will be capable of supporting H-20 wheel loading for heavy-duty traffic or H-10 loading for pedestrian traffic. 12-inch and 15-inch grates will be hinged to the frame using pins. Metal used in the manufacture of the castings will conform to ASTM A536 grade 70-50-05 for ductile iron and

ASTM A-48-83 class 30B for 12-inch and 15-inch cast iron frames. Grates will be provide painted black.

D. **Lined Channels** - All lined channels shall conform to Standard Details SD-18 and SD-19 and these materials:

1. **Air Blown Mortar -** Air blown mortar will conform to provisions in Section 53 of the Caltrans Standard Specifications.

2. **Concrete-** Concrete will be either Class A "6-sack" concrete with Type II cement, sacked concrete, or doweled and sacked concrete. The minimum weight of sacked concrete will be 60 pounds per sack.

3. **Curing Compound -** Curing Compound will conform to provisions in Section 90 of the Caltrans Special Provisions.

4. **Expansion Joint Filler –** Pre-molded expansion joint fillers will be a minimum of 3/8-inch thick and conform to ASTM Designation D1751.

5. **Grouted Cobbles -** Grouted cobbles will require Class A "6 sack" concrete with the cobble mixture to be: all retained on the 1-1/2-inch sieve; not more than 40% passing the 4-inch sieve; and 10-inch maximum size.

6. **Weep Holes -** All weep holes will be 2-inches in diameter and made of: galvanized steel pipe, Schedule 40 or better; PVC pipe, Schedule 40 or better; or, ASS pipe, Schedule 40 or better.

7. **Welded Wire Fabric -** Welded wire fabric to conform to ASTM Designation A185.

E. **Manholes -** All precast manhole barrels, risers, cones, flat tops and grade rings will conform to ASTM Designation C478 and will conform to dimensions shown on Standard Detail SD-23.

1. **Bases -** Bases will be either precast or cast-in-place. Precast bases will conform to ASTM Designation C478. Cast-in-place bases will be Class A "6-sack" concrete with Type II cement. Slump will not exceed 4- inches as determined by the slump cone method of ASTM Designation C143 or an equivalent slump as determined by CTM 533.

2. **Cones -** All cones will conform to ASTM Designation C478.

3. **Joints -** Joints will be made with either non-shrinking mortar or with plastic sealing compounds conforming to Federal Specifications SS-S-00210.

4. **Manhole Frames and Covers -** All castings for manhole frame castings, covers and other purposes will be of cast iron and conform to ASTM Designation A48, Class 30 and will conform to dimensions shown on

Standard Detail SD-22.

5. **Mortar -** Mortar used in finishing manholes and joints will be non-shrinking and consist of 1-cubic-foot of Portland Cement to 2-cubic-feet of concrete sand.

6. **Pipe Connections -** Pipe connections for precast concrete tongue and groove pipe will be made using mortar that will be non-shrinking and consist of 1-cubic-foot of Portland Cement to 2-cubic-feet of concrete sand.

F. **Outlet and Inlet Structures-** All outlet structures will conform to Standard Details SD-15 to SD-17.

G. **Slurry Cement Backfill –** Slurry cement backfill will conform to the requirements of Section 19 of the Caltrans Standard Specifications.

H. **Storm Drain Pipe –** Storm drain pipe will conform to the following:

1. **Acrylonitrile-Butadiene-Styrene (ABS) –** ABS pipe will meet the requirements of ASTM Designation D2680.

2. **High Density Polyethylene Pipe (HDPE) -** HDPE will be Type "S", conforming to Section 64 of the Caltrans Standard Specifications. Joint connections will be watertight. A listing of approved manufacturers includes ADS, Inc., Hancor or approved equal.

   Pipe will meet the requirements of AASHTO Specifications M-294. Pipe will be type S. Pipe and resin producers will be certified according to the PPI/CPPA Third Party Certification Program. All corrugated polyethylene pipe will contain the appropriate program mark, either an official label or permanent affixation prior to shipment.

   Pipe joints will conform to one of these performance criteria:

   a. Soil tight joints as defined by AASHTO Standard Specifications for Highway Bridges, Division II, Section 26.
   b. Soil tight joints must meet a 2-psi (14 kPa) laboratory test per modified ASTM D3212 and utilize a bell and spigot design with a gasket meeting ASTM F477.
   c. Watertight joints must meet a 10.8-psi (74 kPa) laboratory test per ASTM D3212 and utilize a bell and spigot design with a gasket meeting ASTM F477.

   Fittings used with the pipe will not reduce or impair the overall integrity or function of the pipeline. Fittings may be molded or fabricated and will be furnished by the pipe manufacturer.

The manufacturer will provide, when required, a suitable repair coupling certified to provide a watertight seal to 3.5 psi.

3. **Polyvinyl Chloride Pipe (PVC) -** PVC will conform to the following standards based on pipe diameter:

Pipe Diameter	ASTM Designation
10-inch through 15-inch	D3034, SDR 35
18-inch through 27-inch	F794, F2241, SDR 51
30-inch through 48-inch	F794

   All PVC pipe joints will be integral wall bell and spigot configuration, factory formed. All rubber rings will conform to ASTM Designation F477.

4. **Precast Reinforced Concrete Pipe (RCP) -** RCP will conform to ASTM Designation C76 for Class I, II, III, IV or V. The class of pipe will be based on the designation conforming to the approved plans.

   Joints for RCP will be tongue and groove, bell and spigot, or other approved type, and will be of such a design that when properly laid, they will have a smooth and uniform interior surface. Each joint will be sealed to prevent leakage. Sealing materials will consist of rubber gasketed joints or resilient materials conforming to Section 65 of the Caltrans Standard Specifications.

5. **Alternate Pipe Materials -** Alternate pipe materials such as spiral ribbed aluminum coated steel, or other materials, may be submitted with soils analysis and other technical data, for approval by the City Engineer.

[THIS PAGE INTENTIONALLY LEFT BLANK]

STORM DRAIN DETAILS

Utility Stream Crossing Detail *SD-1*
Pipe Connections Detail *SD-2*
Catch Basin Frame and Grate Type Catch Basin *SD-3*
Catch Basin Type "B" *SD-4*
Catch Basin Type "C" *SD-5*
Catch Basin Frame and Grate for Type "D" & "E" Catch Basin *SD-6*
Catch Basin Type "D" *SD-7*
Catch Basin Type "E" *SD-8*
Catch Basin Type "F" *SD-9*
Catch Basin Type "G" *SD-10*
Pipe Outfall-Access Control Rack *SD-11*
Pipe Inlet Structure and Trash Rack (30•Pipe & Smaller) *SD-12*
Pipe Inlet Structure *SD-13*
Trash Rack (33" Pipe & Larger) *SD-14*
Erosion Control Pipe Discharge *SD-15*
Erosion Control-Ditch Discharge *SD-16*
Culvert Outfall *SD-17*
Lined Channel Section *SD-18*
Rock Lined Channel Section *SD-19*
Access Ramp Detail *SD-20*
Grate Type Manhole Cover *SD-21*
Standard 24" Manhole Frame & Cover *SD-22*
Standard Precast Storm Manhole *SD-23*
Type "A" & "B" Saddle Manhole *SD-24*
24" Storm Manhole *SD-25*
Pipe Cover Requirements- CP, RCP, VCP, & Cast-in-Place *SD-26*
Pipe Cover Requirement- CSP & CAP *SD-27*
Pipe Bedding & Initial Backfill *SD-28*
Storm Drain Trench Detail *SD-29*
No Dumping Public Notice Detail *SD-30*

[THIS PAGE INTENTIONALLY LEFT BLANK]

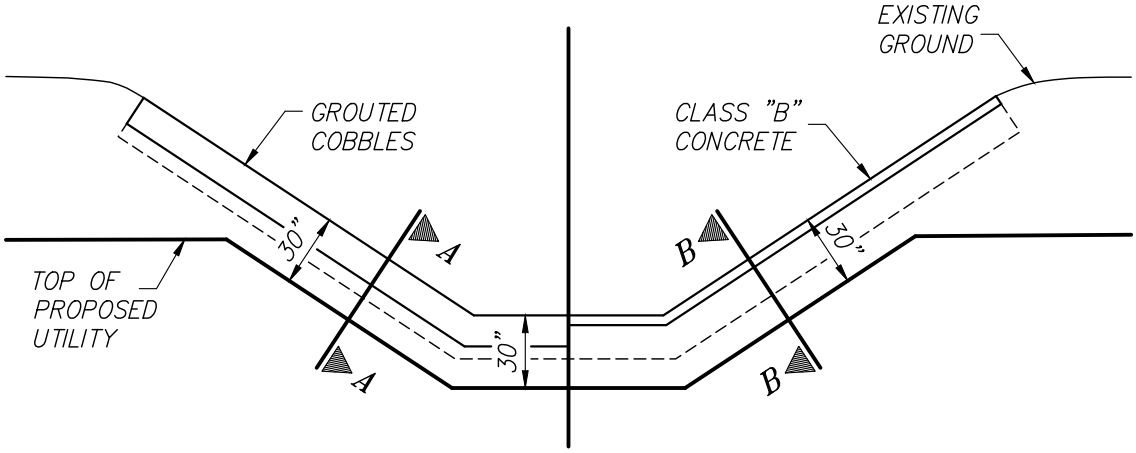

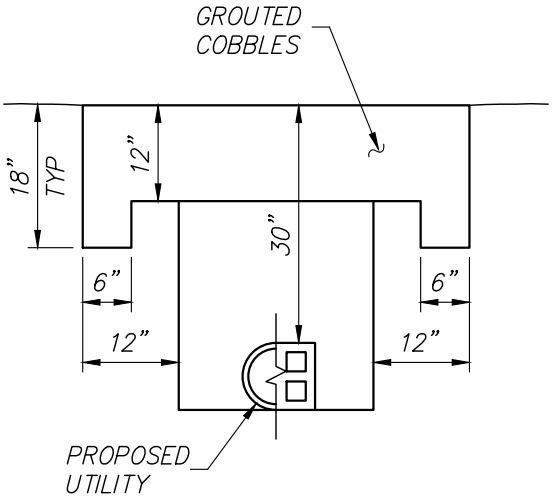

SECTION A–A

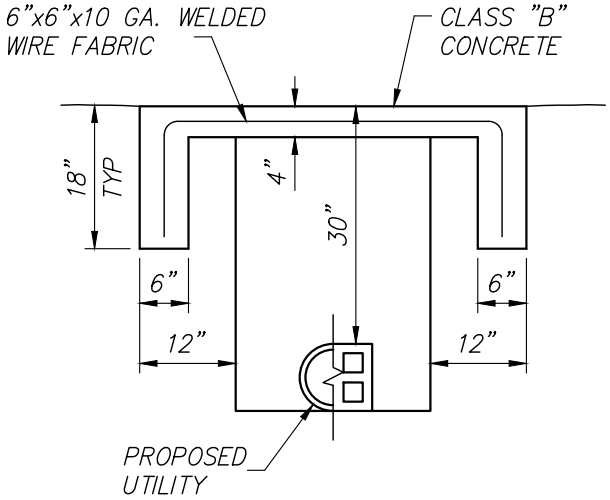

SECTION B–B

NOTES:

1. ALL UTILITY CROSSINGS OF EXISTING STREAMS SHALL BE AT LEAST 30" BELOW EXISTING CHANNEL SIDES AND BOTTOMS. DEEPER PLACEMENT MAY BE REQUIRED IF FUTURE CHANNEL IMPROVEMENTS ARE ANTICIPATED.
2. THE CUT SHALL BE SEALED AS SHOWN WITH GROUTED COBBLES, CLASS "B" CONCRETE OR OTHER APPROVED MATERIAL TO A WIDTH 12" EACH SIDE OF THE UTILITY TRENCH. ALL NATURAL STREAMS, AS SHOWN ON THE NATURAL STREAMS PLAN, SHALL UTILIZE GROUTED COBBLES.

CITY OF LINCOLN
ENGINEERING DEPARTMENT

UTILITY STREAM CROSSING DETAIL

REVISIONS:	DATES:	APPROVED:
		CITY ENGINEER DATE

SCALE: NONE
DATE: SEPTEMBER 2019
DRAWN BY: C.G.

SD-1

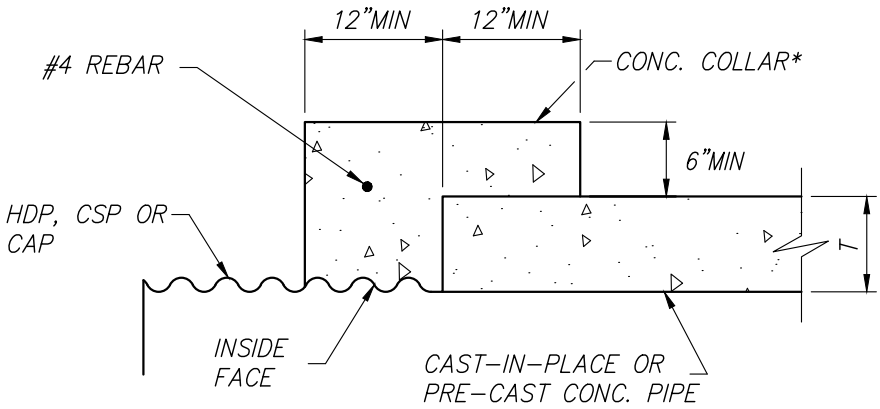

PRE-CAST CONCRETE PIPE TO CSP OR CAP

*TRANSITION OF PIPE MATERIAL AT MANHOLES IS PERFERRED

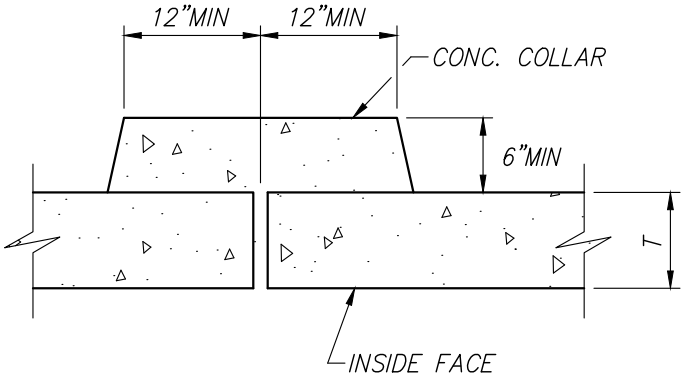

CONCRETE PIPE TO CONCRETE PIPE WITHOUT STANDARD JOINT

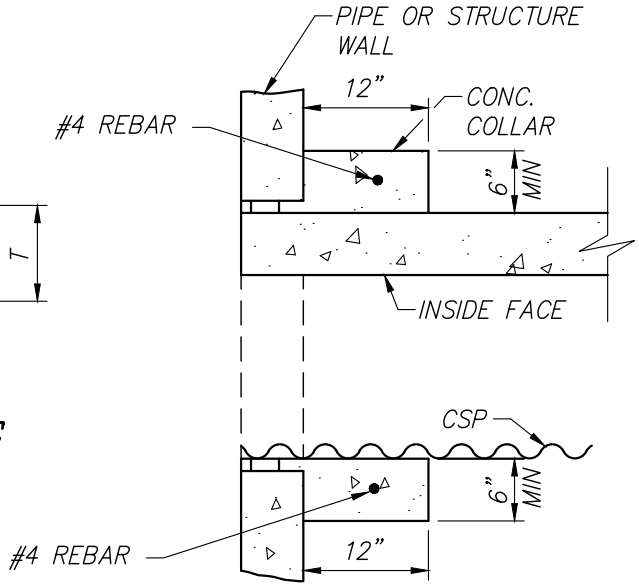

CAP CSP INTO EXISTING PIPE OR STRUCTURE

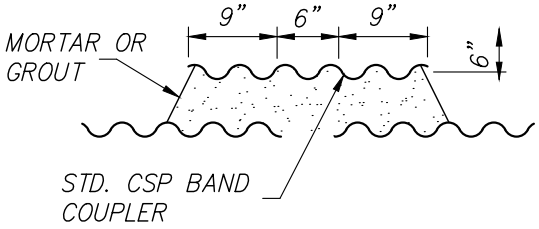

PIPES OF DISSIMILAR METALS

CITY OF LINCOLN
ENGINEERING DEPARTMENT

PIPE CONNECTIONS DETAIL

REVISIONS:	DATES:	APPROVED:
		CITY ENGINEER DATE

SCALE: NONE
DATE: SEPTEMBER 2019
DRAWN BY: C.G.

SD-2

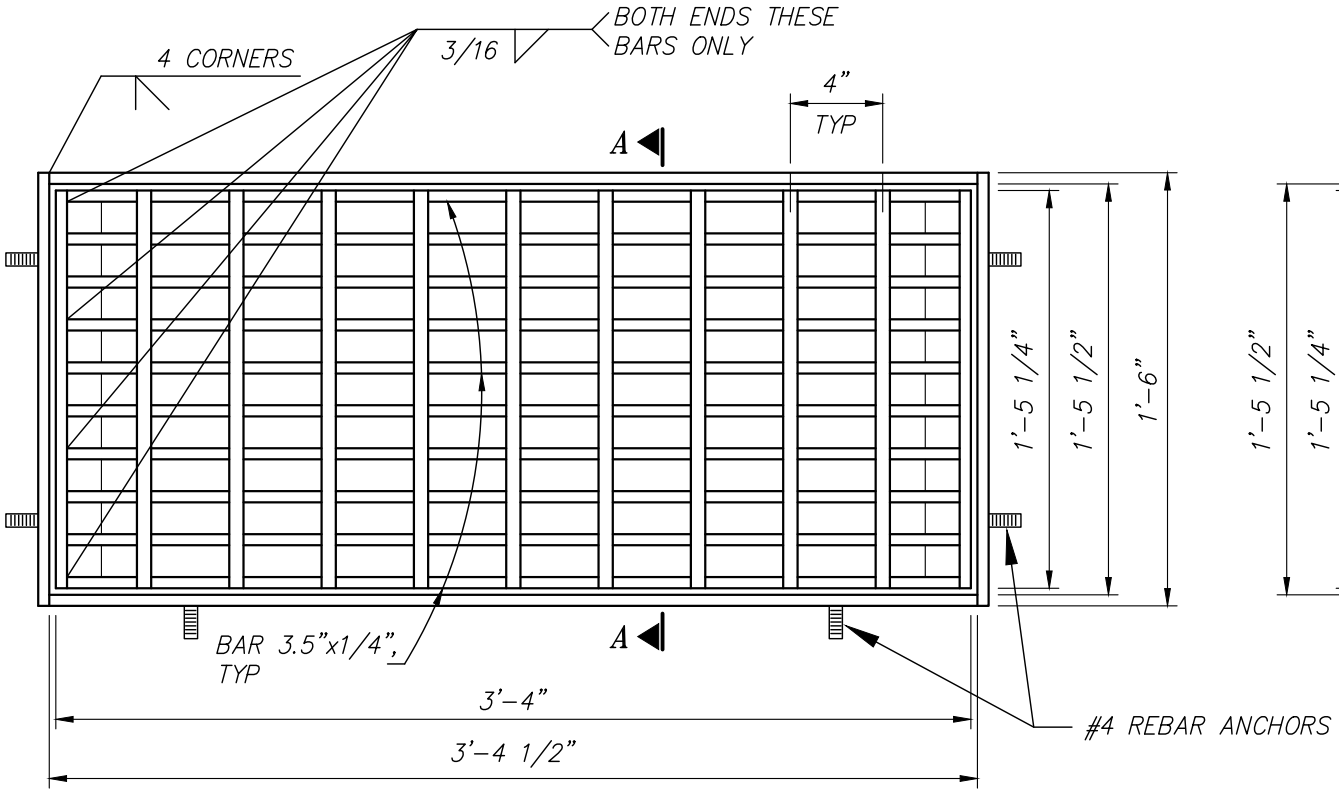

PLAN

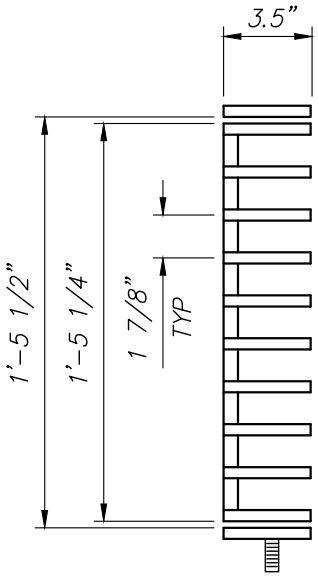

SECTION A-A

NOTE: AT THE CONTRACTOR'S OPTION, END SPACING OF 5/16" CROSS RODS MAY BE 2". INTERIOR SPACING SHALL REMAIN 4".

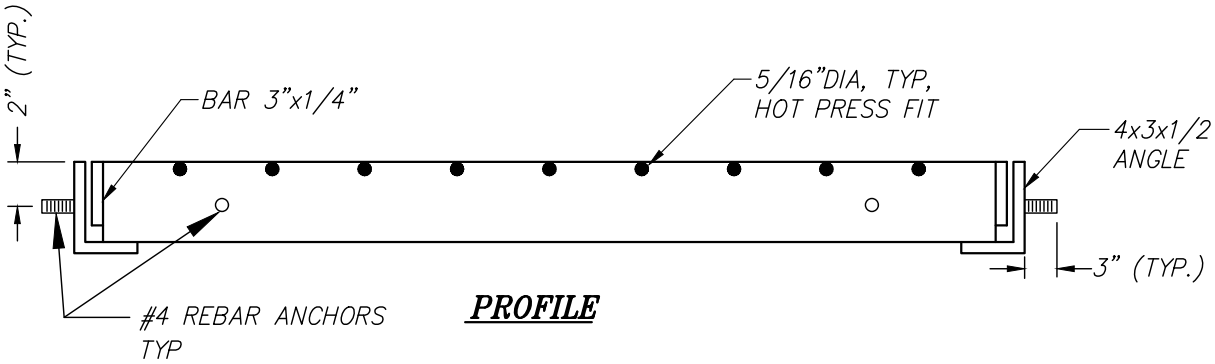

PROFILE

CITY OF LINCOLN
ENGINEERING DEPARTMENT

CATCH BASIN FRAME AND GRATE TYPE "B", "C", CATCH BASIN

REVISIONS:	DATES:	APPROVED:
		CITY ENGINEER DATE

SCALE: NONE
DATE: SEPTEMBER 2019
DRAWN BY: C.G.

SD-3

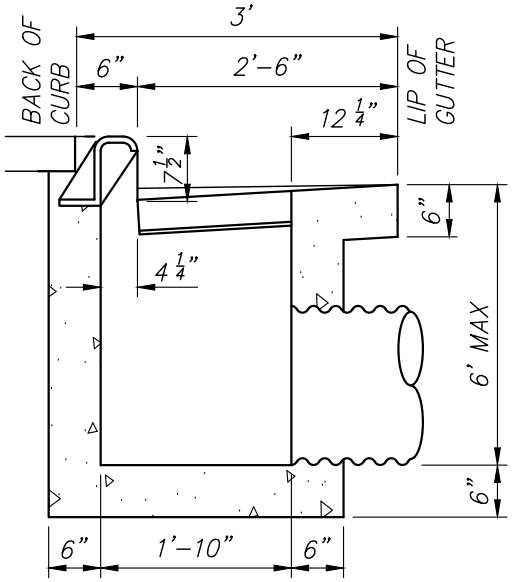

TYPE 2 CURB
SECTION A-A

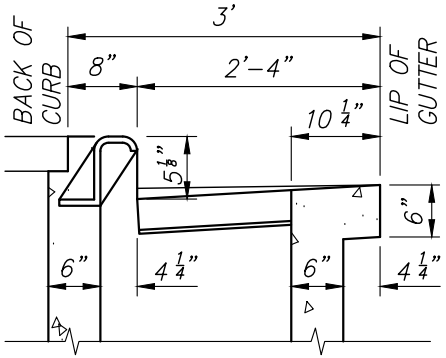

TYPE 1 CURB
SECTION A-A

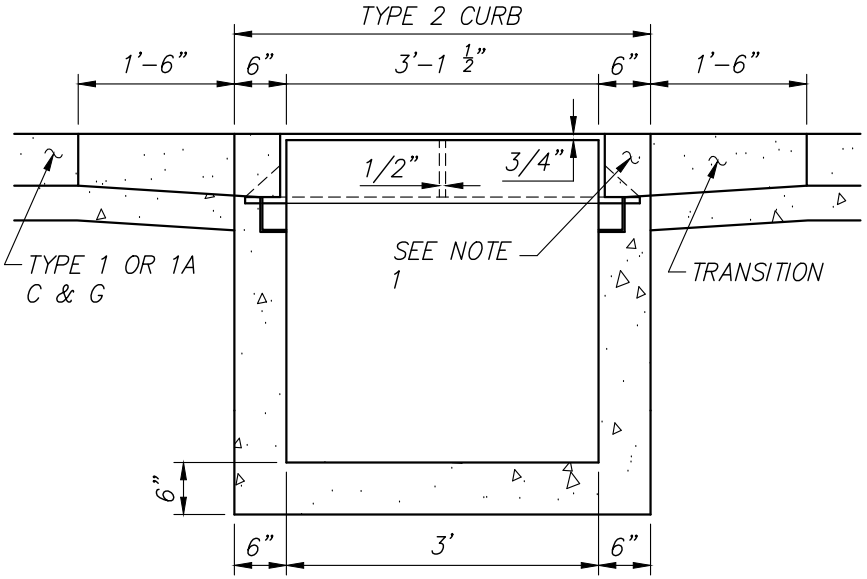

SECTION B-B

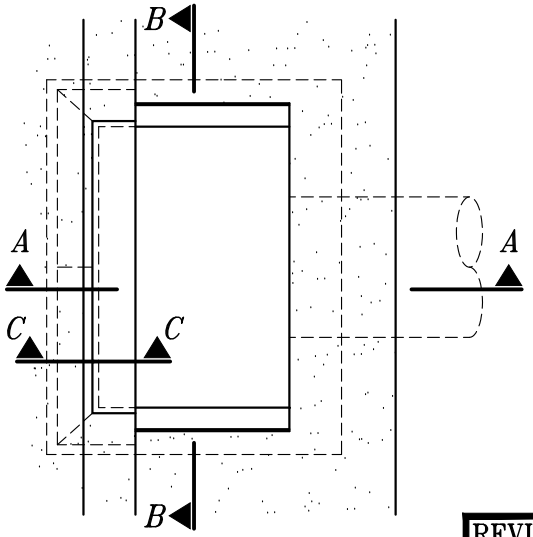

PLAN

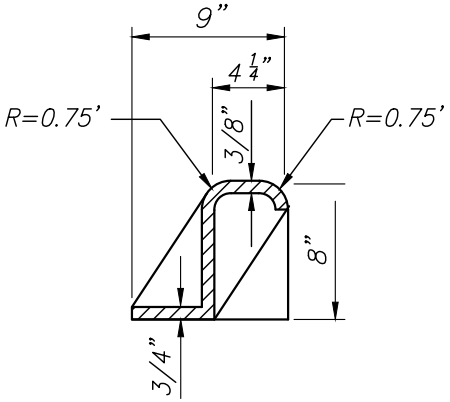

OPEN-BACK HOOD
SECTION C-C

NOTES:

1. CONSTRUCT 6" OF VERTICAL CURB BEFORE BEGINNING TRANSITION ON TYPE 1 C & G.
2. USE CLASS 2 AB FOR BACKFILL
3. BOTTOM OF INLET SHALL BE PLACED PRIOR TO OR AT THE SAME TIME AS SIDE WALLS.
4. FRAME AND GRATE SHALL CONFORM TO DRAWING SD-3.
5. OPEN-BACK HOOD SHALL BE A 36 STEEL.
6. REINFORCING STEEL OR MESH TO BE USED FOR DEPTHS GREATER THAN 4'.

CITY OF LINCOLN
ENGINEERING DEPARTMENT

CATCH BASIN
TYPE "B"

REVISIONS:	DATES:	APPROVED:
		CITY ENGINEER DATE

SCALE: NONE
DATE: SEPTEMBER 2019
DRAWN BY: C.G.

SD-4

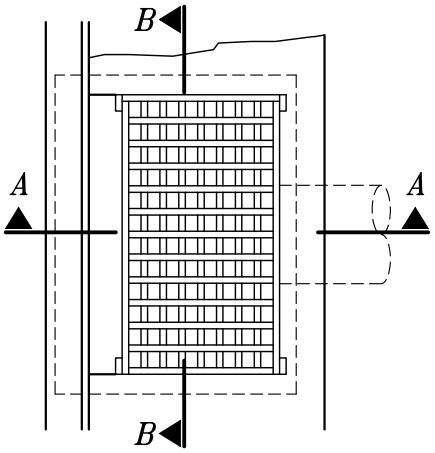

PLAN

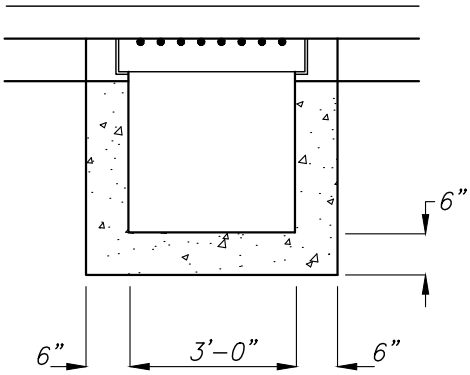

SECTION B-B

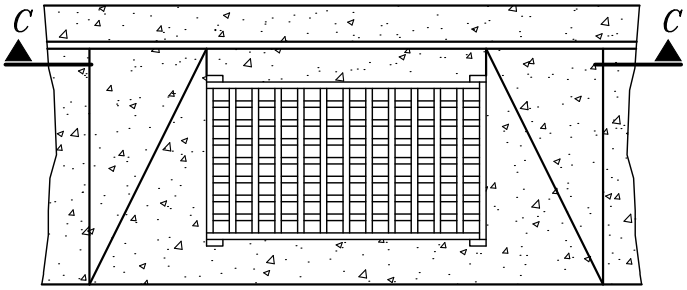

PLAN
STANDARD DEPRESSION

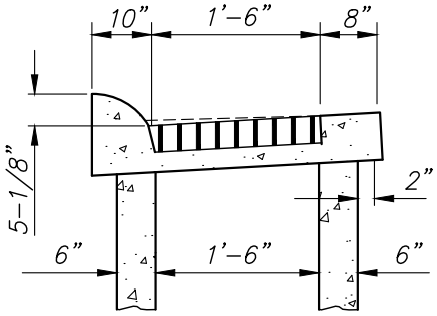

TYPE 1 CURB SECTION A-A

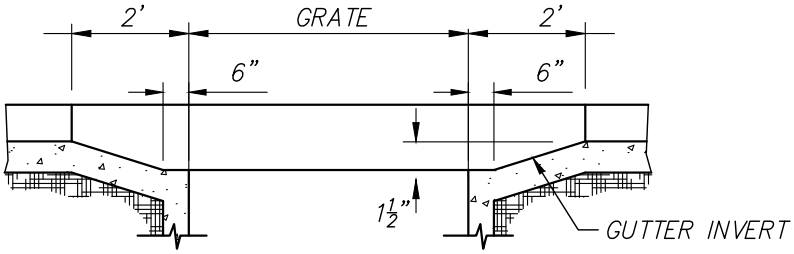

STANDARD DEPRESSION SECTION C-C

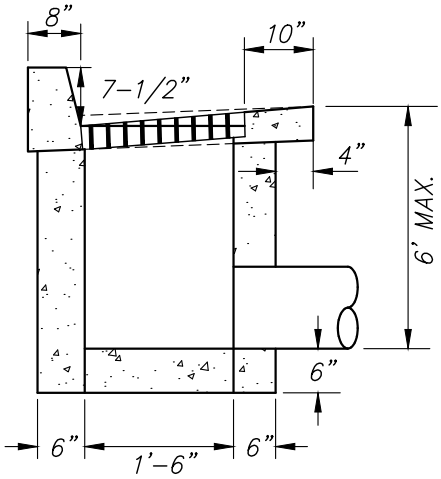

TYPE 2 CURB SECTION A-A

NOTES:

1. BOTTOM OF CATCH BASIN SHALL BE PLACED PRIOR TO OR AT THE SAME TIME AS SIDE WALLS.
2. SEE NOTE NO. 1 OF DRAWING SD-4 FOR GUTTER DEPRESSION.
3. FRAME AND GRATE SHALL CONFORM TO DRAWING SD-3.
4. REINFORCING STEEL OR MESH TO BE USED IN DEPTHS GREATER THEN 4'
5. USE CLASS 2 AB FOR BACKFILL MATERIAL.

CITY OF LINCOLN
ENGINEERING DEPARTMENT

CATCH BASIN
TYPE "C"

REVISIONS:	DATES:	APPROVED:
		CITY ENGINEER DATE

SCALE: NONE
DATE: SEPTEMBER 2019
DRAWN BY: C.G.

SD-5

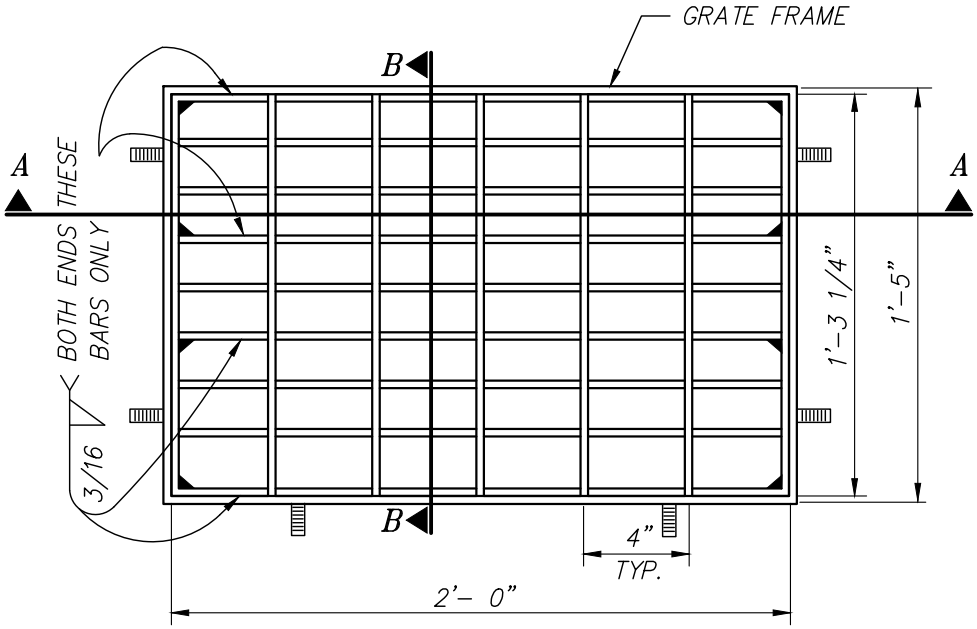

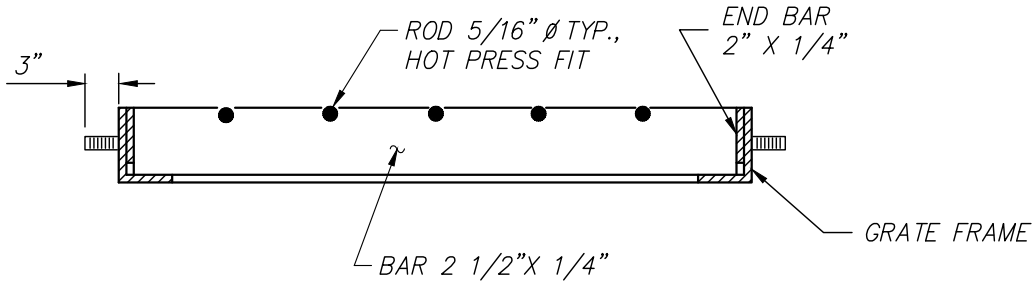

SECTION A-A

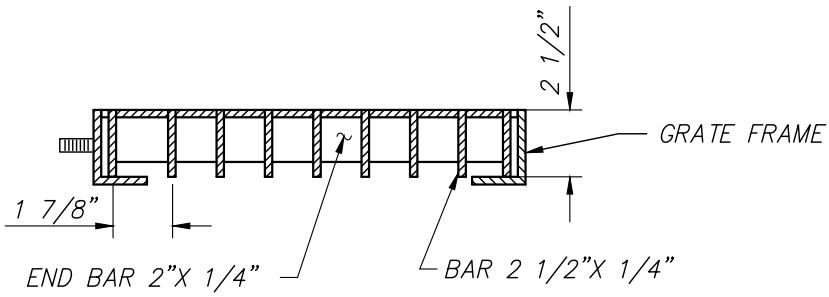

SECTION B-B

NOTES:

1. AT THE CONTRACTOR'S OPTION, END SPACING OF 5/16" CROSS RODS MAY BE 2". INTERIOR SPACING SHALL REMAIN AT 4".

CITY OF LINCOLN
ENGINEERING DEPARTMENT

CATCH BASIN FRAME AND GRATE FOR TYPE "D" & "E" CATCH BASIN

REVISIONS:	DATES:	APPROVED:
		CITY ENGINEER DATE

SCALE: NONE
DATE: SEPTEMBER 2019
DRAWN BY: C.G.

SD-6

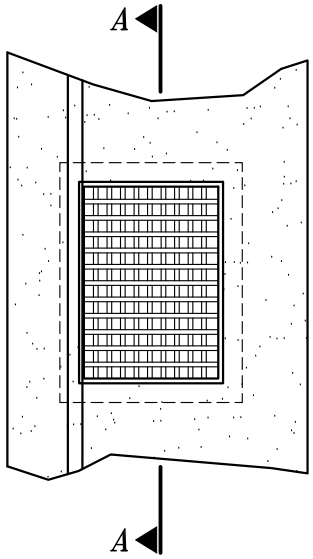

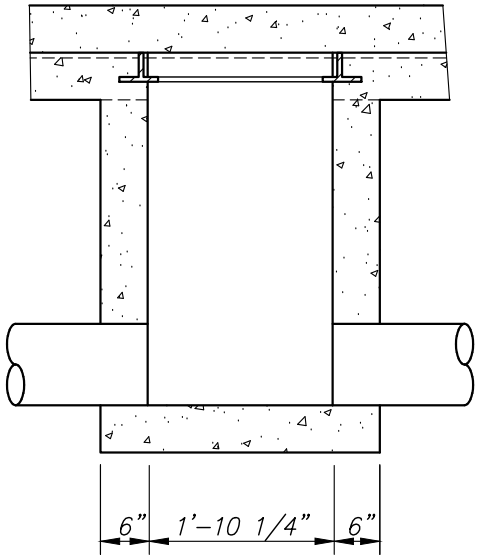

SECTION A-A

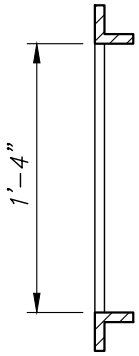

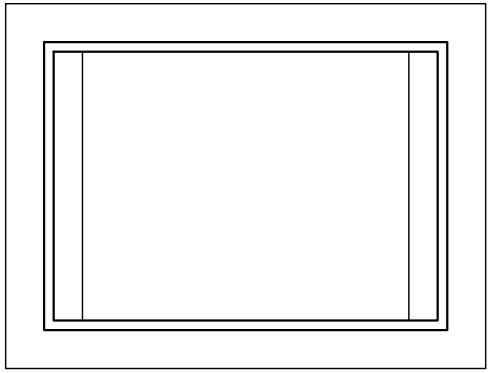

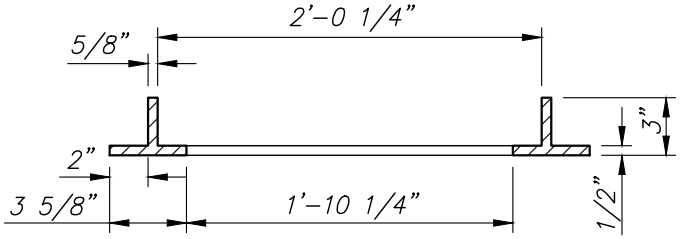

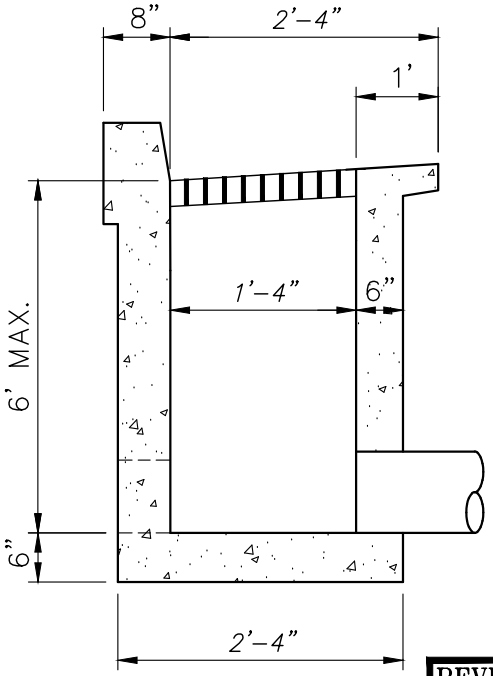

TYPE 2 VERTICAL CURB

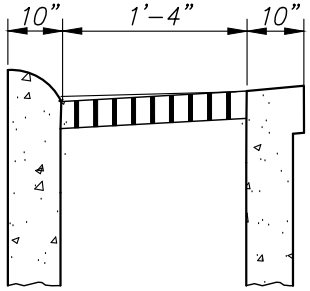

TYPE 1 CURB

NOTES:

1. SEE DRAWING SD-5 FOR GUTTER DEPRESSION.
2. SEE DRAWING SD-6 FOR GRATE DETAIL.
3. 12" LENGTH OF 1/4" GALVANIZED CHAIN TO BE PERMANENTLY AFFIXED TO THE GRATE AND ONE CORNER OF THE INLET FRAME ADJACENT TO THE CURB.
4. BOTTOM OF CATCH BASIN SHALL BE PLACED PRIOR TO OR AT THE SAME TIME AS SIDE WALLS.
5. USE CLASS 2 AB FOR BACKFILL MATERIAL.

CITY OF LINCOLN
ENGINEERING DEPARTMENT

CATCH BASIN
TYPE "D"

REVISIONS:	DATES:	APPROVED:
		CITY ENGINEER DATE

SCALE: NONE
DATE: SEPTEMBER 2019
DRAWN BY: C.G.

SD-7

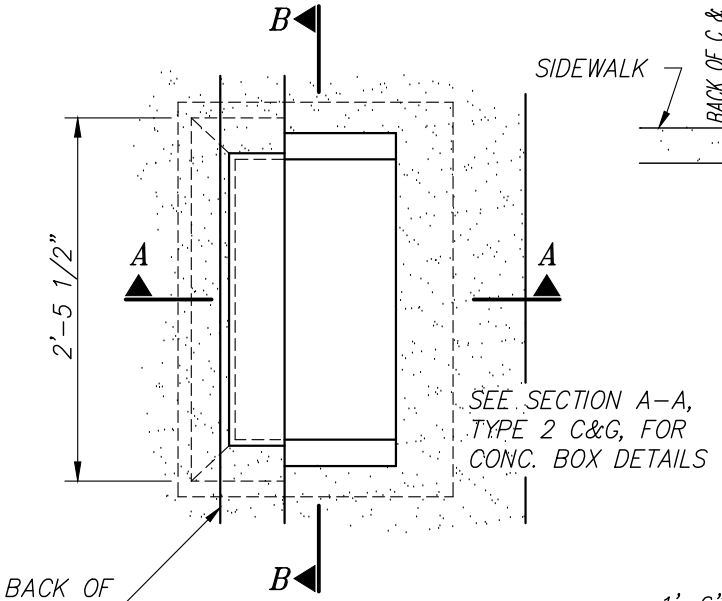

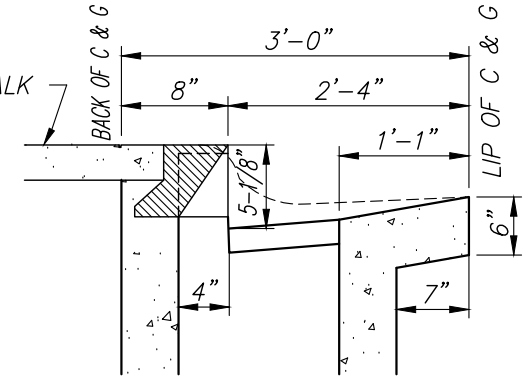

TYPE 1 CURB
SECTION A-A

NOTES:

1. SEE DRAWING SD-5 FOR GUTTER DEPRESSION
2. BOTTOM OF CATCH BASIN SHALL BE PLACED PRIOR TO OR AT THE SAME TIME AS THE SIDEWALLS.
3. SEE DRAWING SD-6 FOR GRATE DETAIL.
4. THIS STRUCTURE IS TO SERVE ONLY TO PICK UP GUTTER DRAINAGE OR AS A JUNCTION BOX FOR SMALL PIPES IN A LONGITUDINAL DIRECTION ONLY.
5. 12" LENGTH OF 1/4" GALVANIZED CHAIN TO BE PERMANENTLY AFFIXED TO THE GRATE AND ONE CORNER OF THE CATCH BASIN FRAME ADJACENT TO THE CURB.
6. OPEN-BACK HOOD & GRATE FRAME SHALL BE A36 STEEL PLATE (WESTERN CONSTRUCTION SUPPLY OR EQUAL)
7. USE CLASS 2 AB FOR BACKFILL MATERIAL.

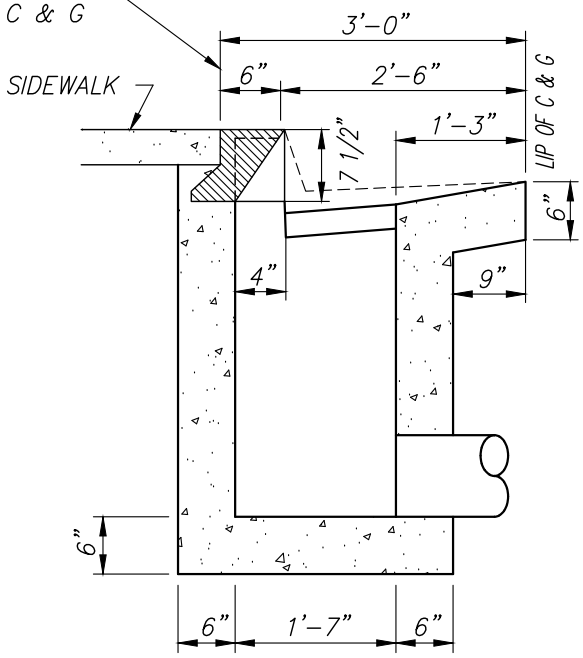

TYPE 2 CURB
SECTION A-A

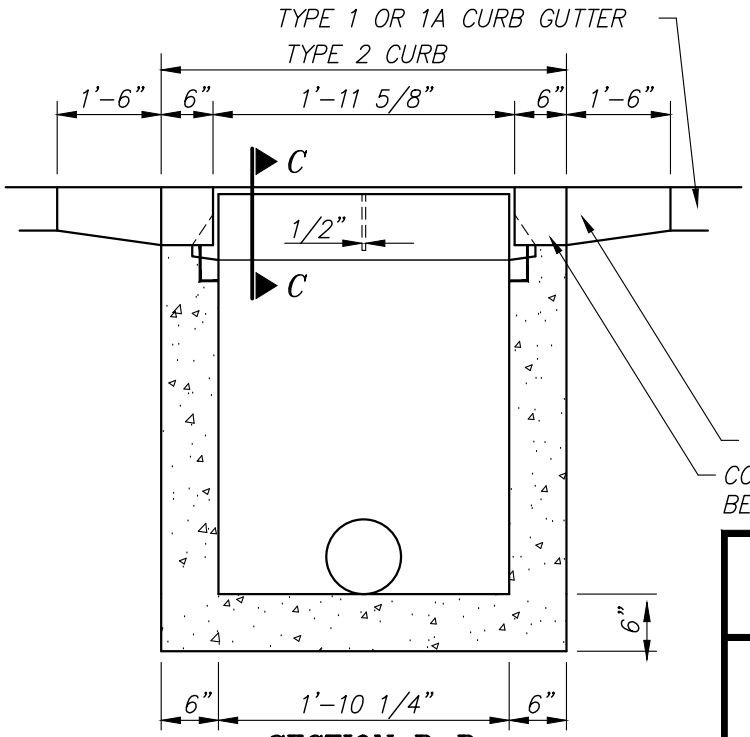

SECTION B-B

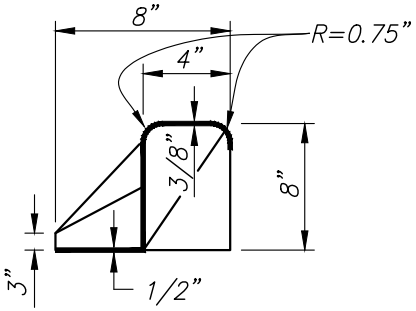

OPEN-BACK HOOD
SECTION C-C

CITY OF LINCOLN
ENGINEERING DEPARTMENT

CATCH BASIN
TYPE "E"

REVISIONS:	DATES:	APPROVED:
		CITY ENGINEER DATE

SCALE: NONE
DATE: SEPTEMBER 2019
DRAWN BY: C.G.

SD-8

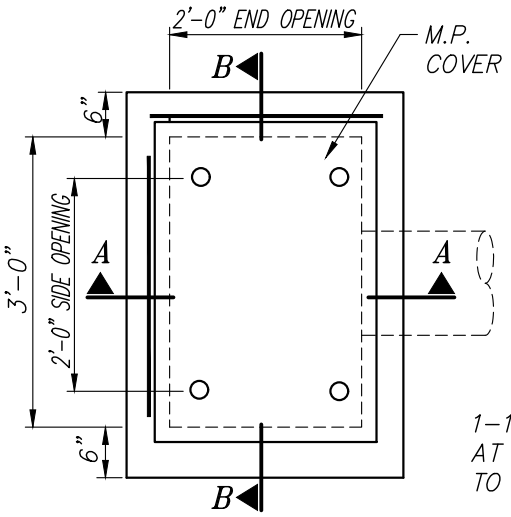

PLAN

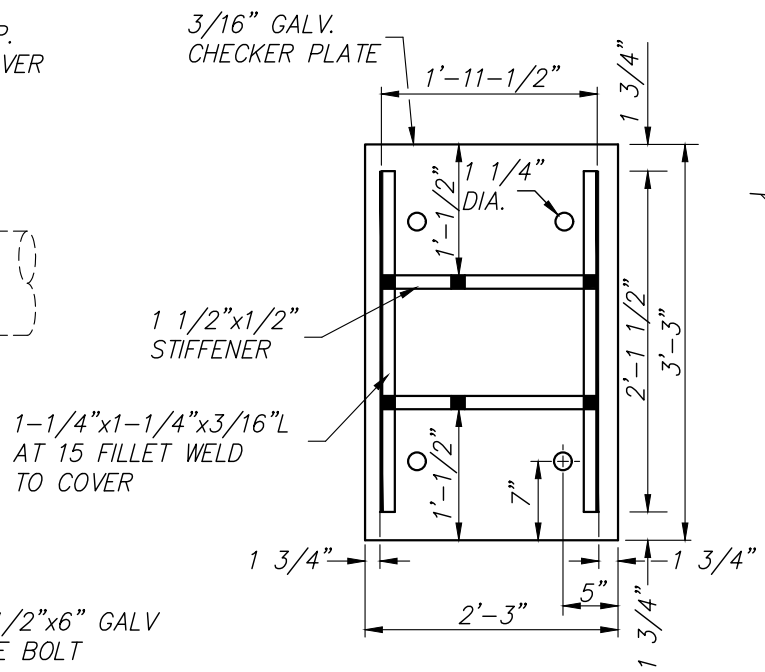

METAL COVER
(UNDERSIDE)

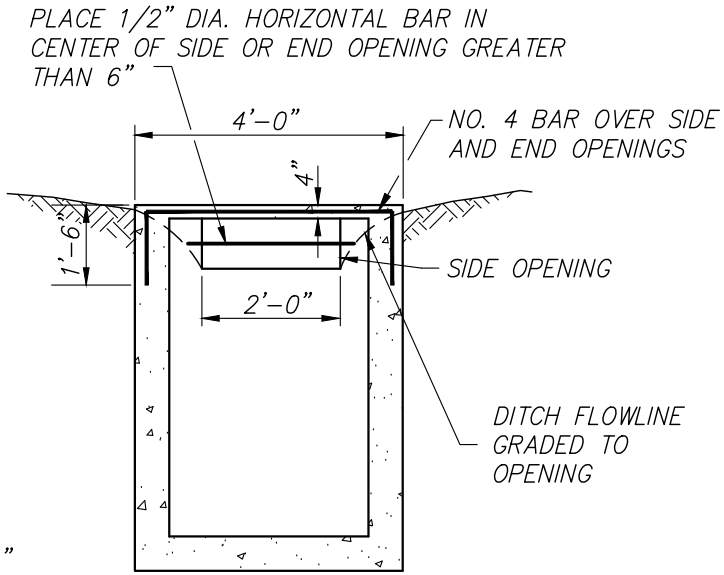

SECTION B-B

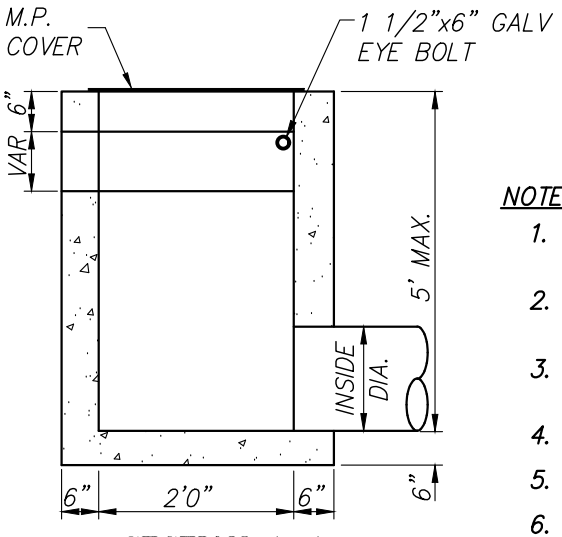

SECTION A-A

NOTES:

1. TOP OF WALLS TO BE FINISHED TO A FLAT PLANE TO PROVIDE EVEN BEARING FOR PLATE COVER.
2. PROVIDE 1/4" x 18" GALV. CHAIN WELD TO COVER AND EYE BOLT.
3. PROVIDE END OR SIDE OPENINGS AS SHOWN ON PLAN OR CROSS SECTION.
4. METAL PLATE COVER TO BE GALVANIZED.
5. USE CLASS 2 AB FOR BACKFILL MATERIAL.
6. REINFORCING STEEL OR MESH TO BE USED FOR DEPTHS GREATER THAN 4'

CITY OF LINCOLN
ENGINEERING DEPARTMENT

CATCH BASIN
TYPE "F"

REVISIONS:	DATES:	APPROVED:
		CITY ENGINEER DATE

SCALE: NONE
DATE: SEPTEMBER 2019
DRAWN BY: C.G.

SD-9

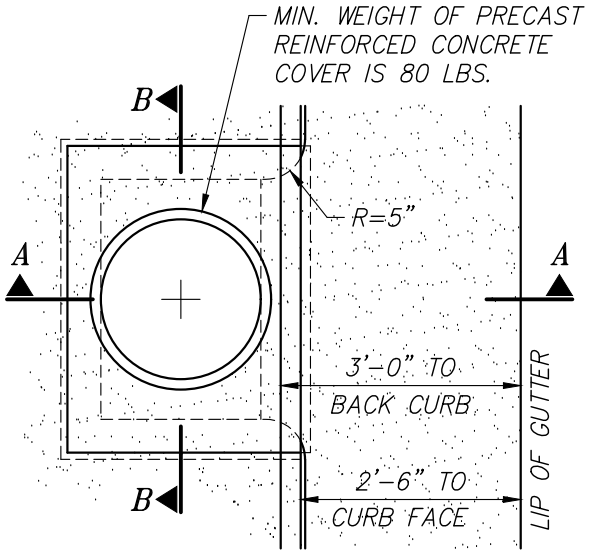

PLAN

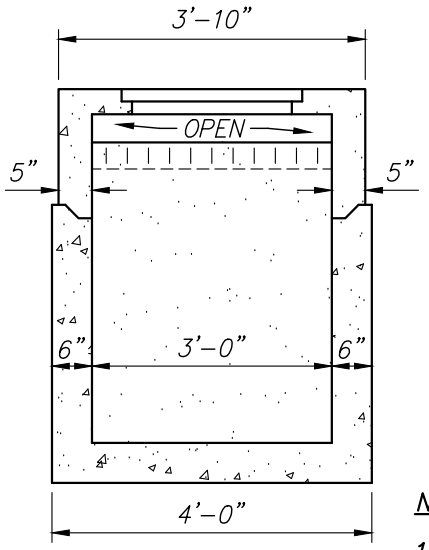

SECTION B-B

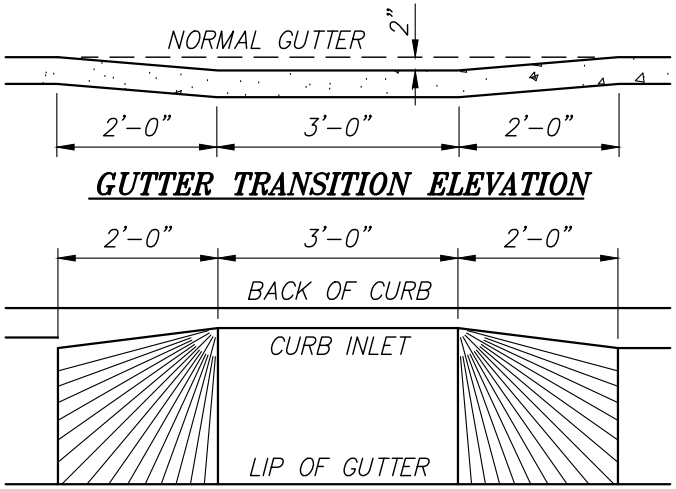

NOTES:

1. CATCH BASIN ASSEMBLY MAY BE PRECAST CONCRETE, FIBER GLASS FORMLINER WITH CLASS "B" P.C.C. OR FORMED AND CAST-IN-PLACE P.C.C.
2. ALL METAL SHALL BE HOT DIPPED GALV. ASTM A123.
3. USE CLASS 2 AB FOR BACKFILL MATERIAL.

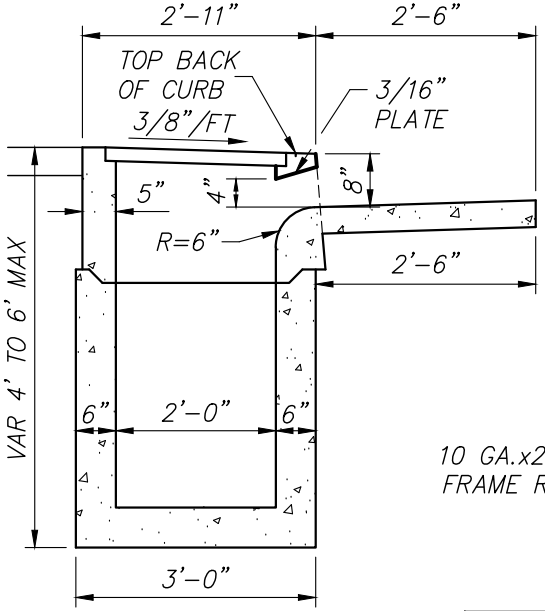

SECTION A-A

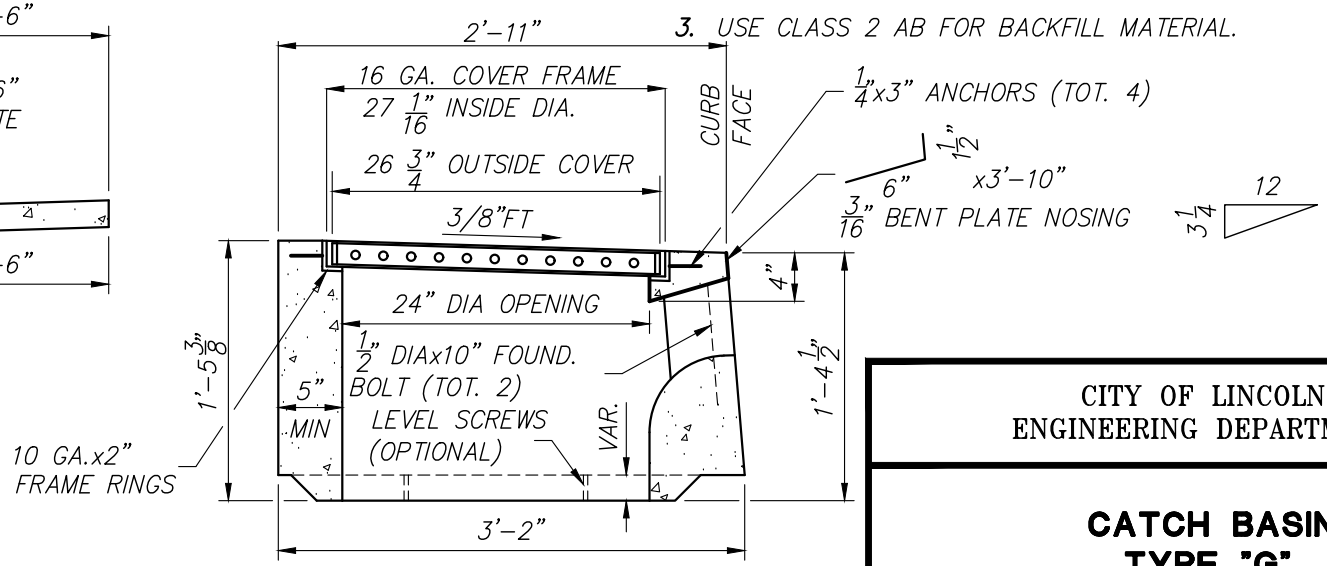

CATCH BASIN DETAIL

CITY OF LINCOLN
ENGINEERING DEPARTMENT

CATCH BASIN
TYPE "G"

REVISIONS:	DATES:	APPROVED:
		CITY ENGINEER DATE

SCALE: NONE
DATE: SEPTEMBER 2019
DRAWN BY: C.G.

SD-10

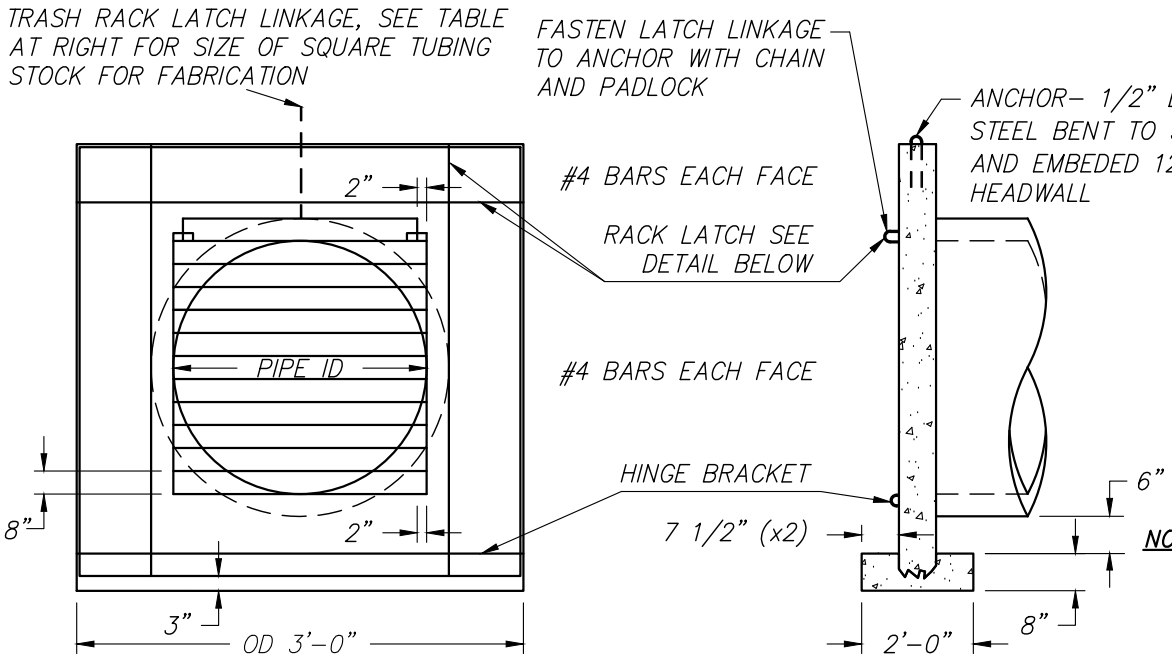

PIPE SIZE	RACK BAR SIZE	LATCH PLATE THICKNESS	LATCH PLATE SIZE
21"	#4	1/4"	1"; 0.095" THICK
24"	*	*	*
27"	#5	*	*
30"	*	3/8"	*
33"	#6	*	*
34"	*	*	1"; 0.133" THICK
42"	#7	*	*
48"	*	1/2"	*
54"	*	*	*
60"	#8	*	*
66"	*	*	*
72"	*	*	*
84"	*	*	*

NOTES:

1. ENTIRE RACK TO BE WELDED REINFORCING STEEL OR ROUND BARS OF EQUAL DIA WITH HORIZONTAL BARS BEING 8" CENTER TO CENTER.
2. USE CLASS "B" CONCRETE.
3. ROOM SHALL BE PROVIDED DOWNSTREAM TO LAY RACK FLAT.
4. FASTEN LATCH BRACKET, TO HEADWALL WITH 1/2"x6" BOLTS
5. WHEN RACK IS IN THE CLOSED POSITION, THE BOTTOM RACK BAR SHALL BE TIGHT AGAINST THE TOP OF THE HINGE BRACKET SO THAT THE RACK CANNOT BE LIFTED OFF THE LATCH.
6. FABRICATE HINGE BRACKET FROM #4 REBAR.
7. ALL REINFORCING STEEL SHALL HAVE 2" EMBEDMENT EXCEPT AS NOTED.

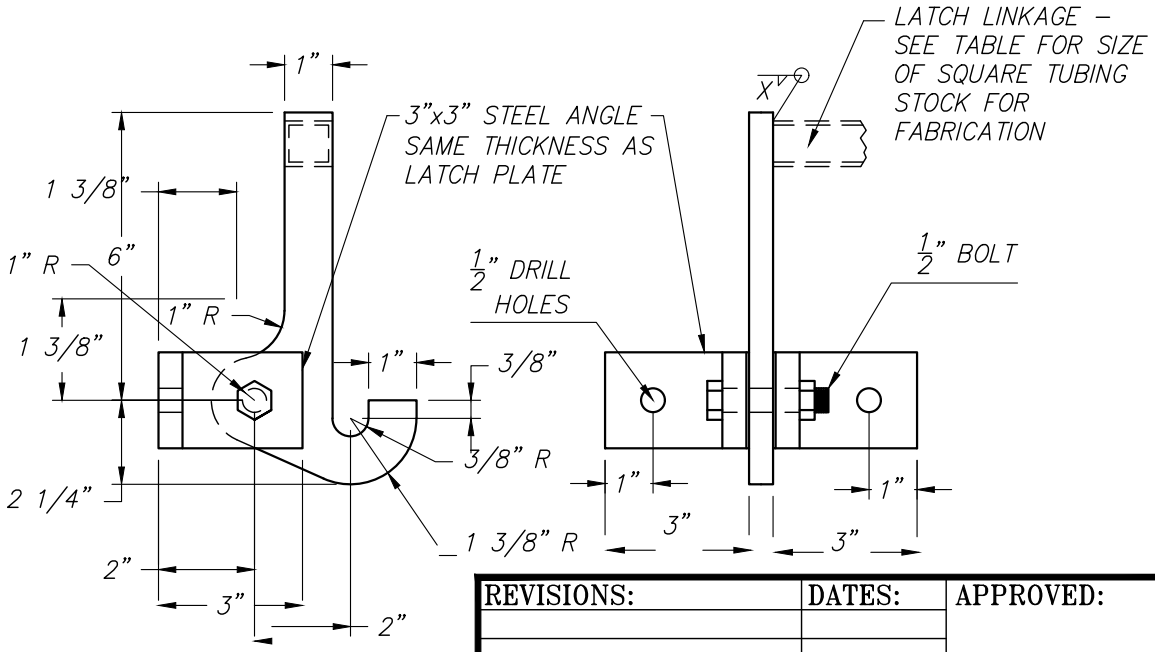

REVISIONS:	DATES:	APPROVED:
		CITY ENGINEER DATE

CITY OF LINCOLN
ENGINEERING DEPARTMENT

PIPE OUTFALL-ACCESS CONTROL RACK

SCALE: NONE
DATE: SEPTEMBER 2019
DRAWN BY: C.G.

SD-11

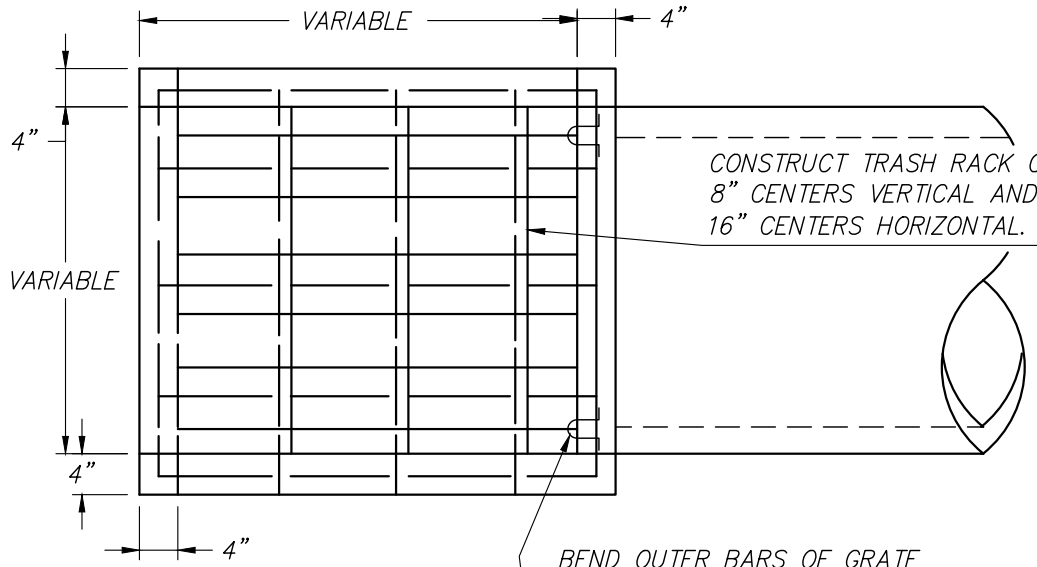

TOP VIEW

CONSTRUCT TRASH RACK OF #5 BARS
8" CENTERS VERTICAL AND
16" CENTERS HORIZONTAL.

BEND OUTER BARS OF GRATE
INTO AN 'EYE' AND CONNECT
TO 'EYE' OF 'U' BARS SET
INTO WALL.

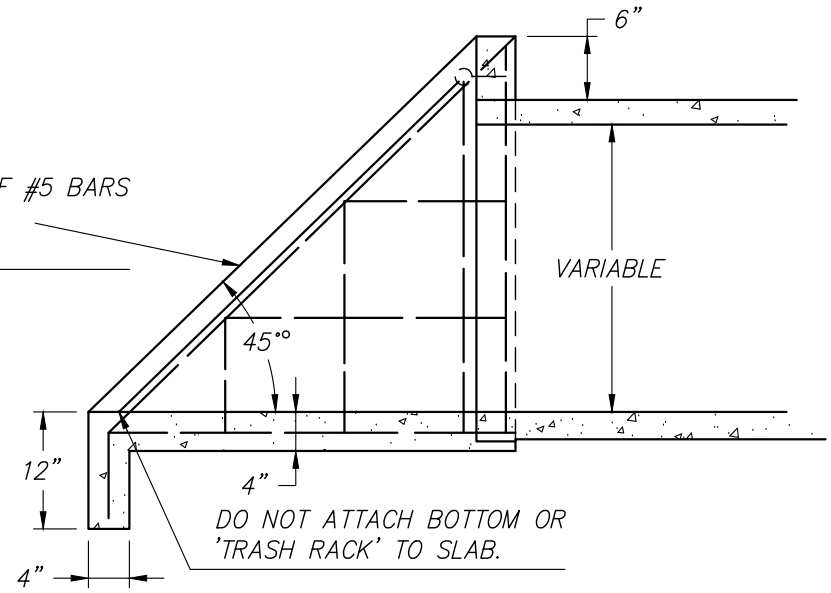

DO NOT ATTACH BOTTOM OR
'TRASH RACK' TO SLAB.

SIDE VIEW

NOTE: ALL REINFORCING TO BE #4 @ 12"
USE CLASS 'B' CONCRETE

CITY OF LINCOLN
ENGINEERING DEPARTMENT

PIPE INLET STRUCTURE AND TRASH RACK (30" PIPE & SMALLER)

REVISIONS:	DATES:	APPROVED:
		CITY ENGINEER DATE

SCALE: NONE
DATE: SEPTEMBER 2019
DRAWN BY: C.G.

SD-12

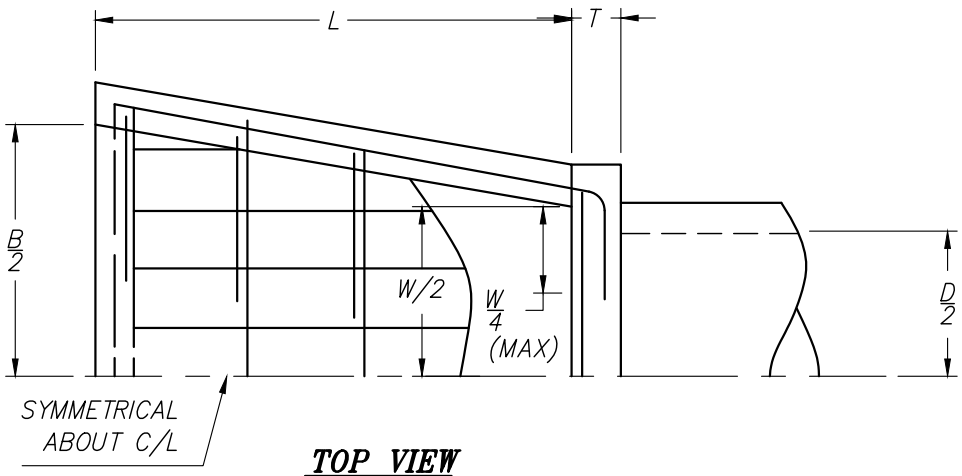

TOP VIEW

DIMENSIONS AND REINFORCING

D	W	B	L	T	ALL REINFORCING
33"	3'-3"	5'-3"	4'-0"	6"	#3 @ 12"
36"	3'-8"	5'-8"	4'-2"	6"	#3 @ 12"
42"	4'-4"	6'-4"	4'-8"	6"	#3 @ 12"
48"	4'-10"	7'-2"	5'-2"	8"	#6 @ 12"
54"	5'-4"	8'-0"	6'-0"	8"	#6 @ 12"
60"	6'-0"	8'-10"	6'-6"	8"	#6 @ 12"

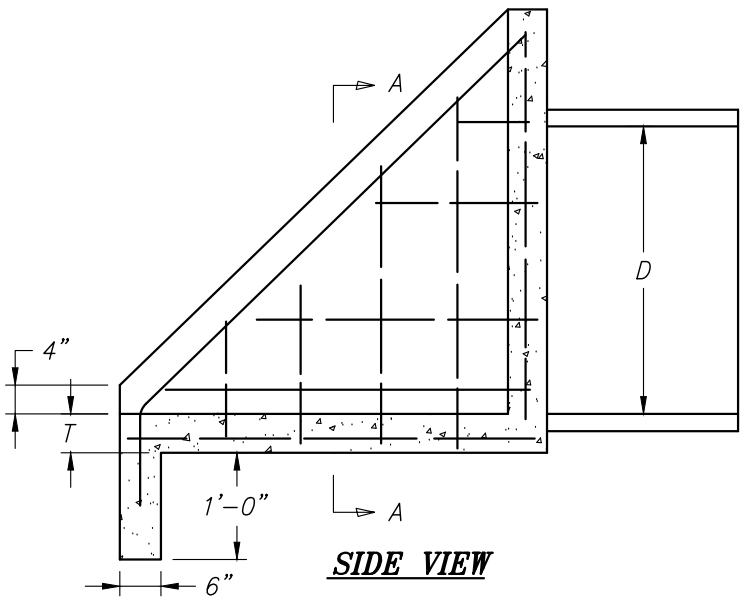

SIDE VIEW

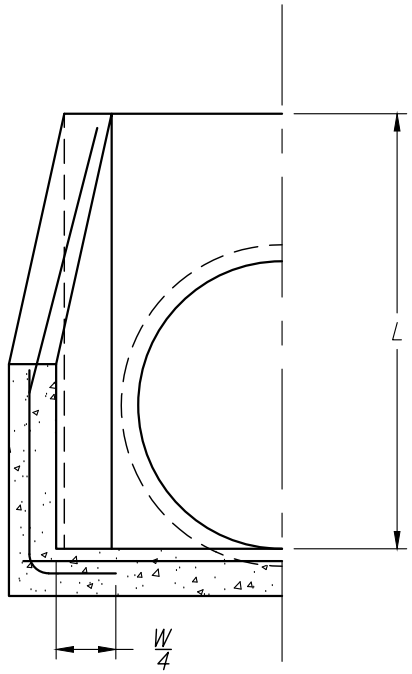

HALF SECTION A-A

NOTES:

1. "B" MAY BE REDUCED IF REQUIRED BY CHANNEL DIMENSIONS.
2. REINFORCING BAR SPACING SHOWN IS MAXIMUM SPACING.
3. USE CLASS 'B' CONCRETE.

CITY OF LINCOLN
ENGINEERING DEPARTMENT

PIPE INLET STRUCTURE

REVISIONS:	DATES:	APPROVED:
		CITY ENGINEER DATE

SCALE: NONE
DATE: SEPTEMBER 2019
DRAWN BY: C.G.

SD-13

TRASH RACK DIMENSIONS

DIA.	NUMBER & SIZE		L	L'	S	H
	BAR 'A'	L BAR				
33"	8-3/8" x 2-1/2"	3-2 x 2 x 1/4	3'-1"	1'-10"	8"	3'-8"
36"	8-3/8" x 2-1/2"	3-2 x 2 x 1/4	3'-4"	1'-11"	8"	3'-10"
42"	9-3/8" x 2-1/2"	3-2 x 2 x 1/4	5'-11"	2'-3"	9"	4'-4"
48"	9-3/8" x 2-1/2"	4-2 x 2 x 1/4	6'-7"	1'-9"	10"	4'-10"
54"	10-3/8" x 3"	4-3 x 3 x 1/4	7'-9"	2'-1.5"	10.5"	5'-8"
60"	11-3/8" x 3-1/2"	4-3 x 3 x 1/4	8'-5"	2'-4"	11"	6'-2"

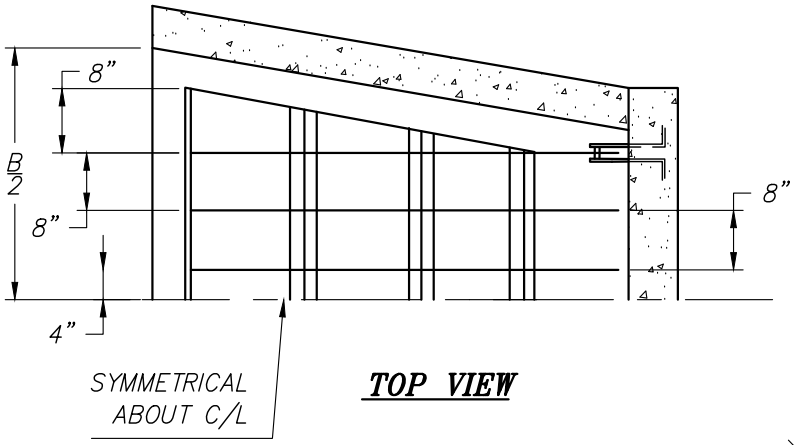

TOP VIEW

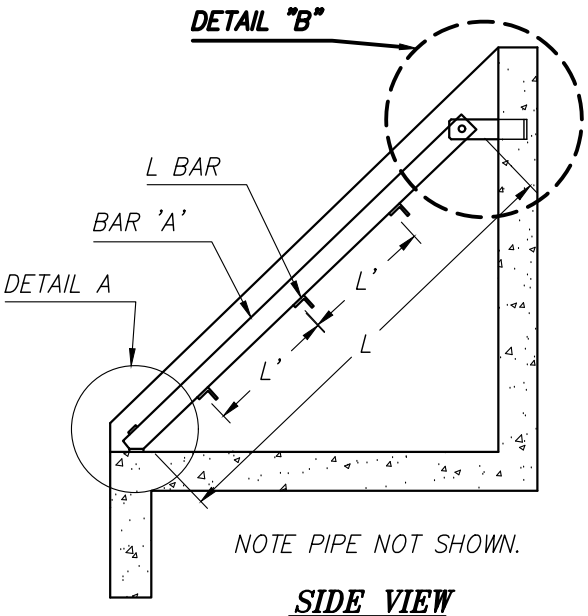

SIDE VIEW

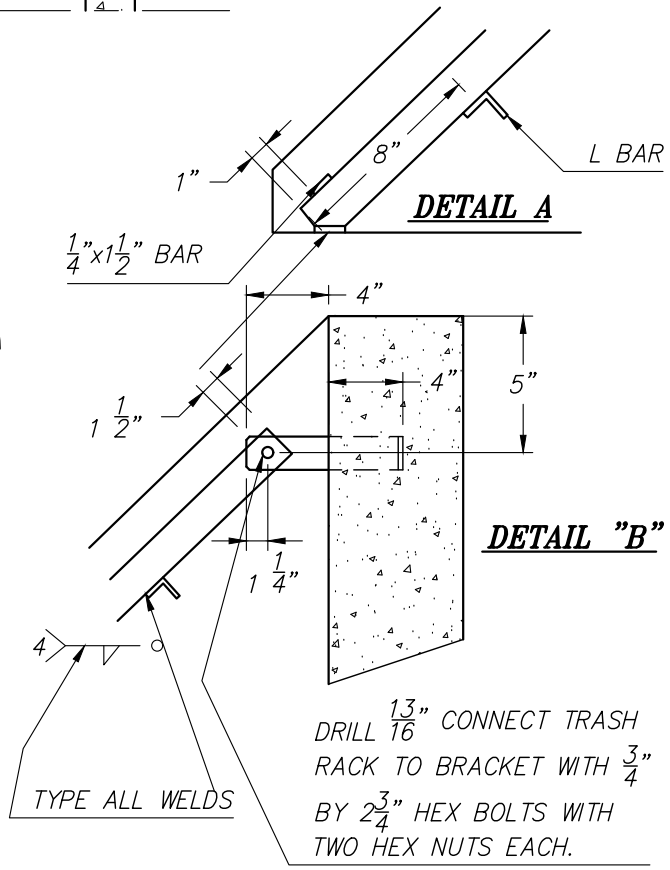

DETAIL "B"

NOTES:

1. THIS TRASH RACK MAY BE USED WITH PIPE INLET STRUCTURES.
2. MATERIAL TO CONFORM TO ASTM DESIGNATION A-36.
3. 'S' MAY VARY WITH 'B' SEE PLATE.
4. ALL FILLET WELDS TO BE 3/16"
5. 2 HINGES REQUIRED FOR 33,36 & 42 INCH PIPES. 3 HINGES REQUIRED FOR 48, 54 & 60 INCH PIPES.

CITY OF LINCOLN
ENGINEERING DEPARTMENT

TRASH RACK
(33" PIPE & LARGER)

REVISIONS:	DATES:	APPROVED:
		CITY ENGINEER DATE

SCALE: NONE
DATE: SEPTEMBER 2019
DRAWN BY: C.G.

SD-14

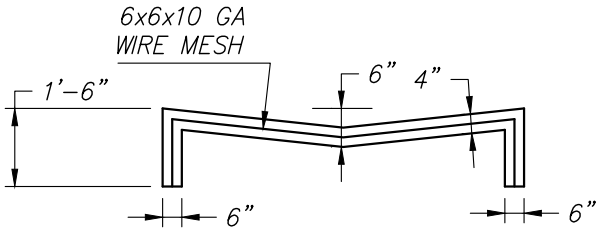

SECTION A-A

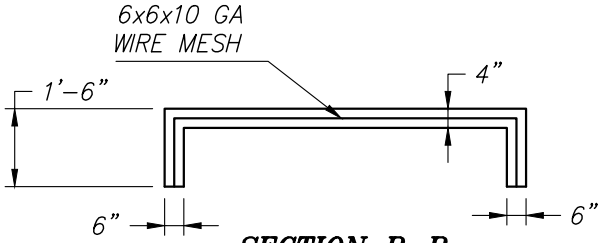

SECTION B-B

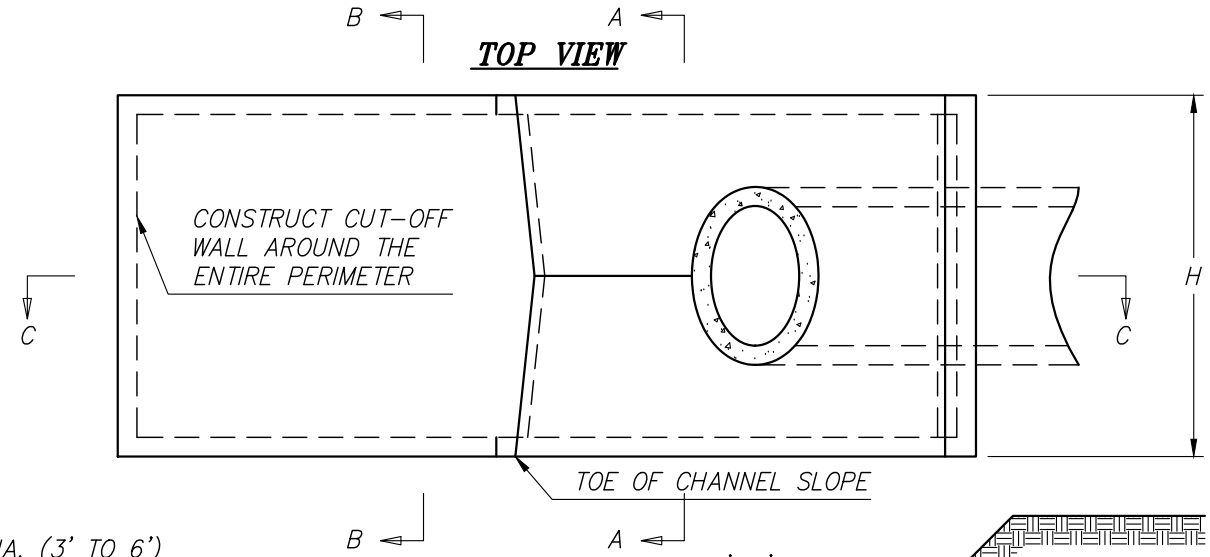

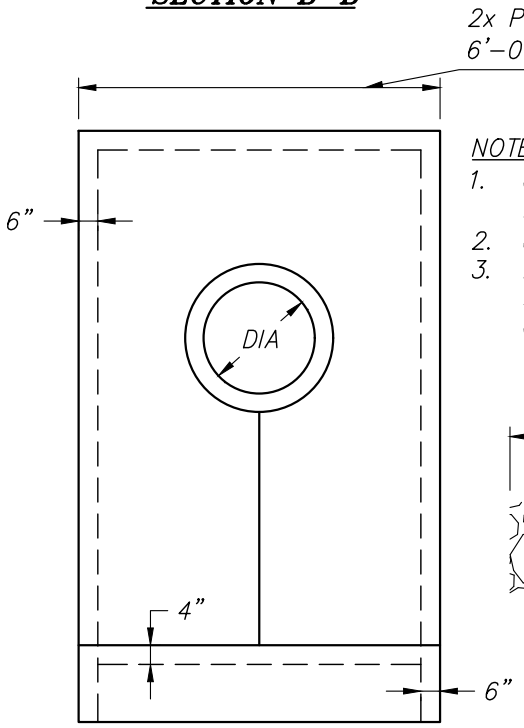

FRONT VIEW

NOTES:

1. USE CLASS 'B' CONCRETE OR GROUTED COBBLES AS SPECIFIED.
2. 6'x6'x10 GA. WIRE MESH THROUGHOUT CONCRETE.
3. LENGTH OF RIP-RAP AND TOE OF CHANNEL SHALL BE DETERMINED BY VELOCITY DISSIPATION CALCULATIONS.

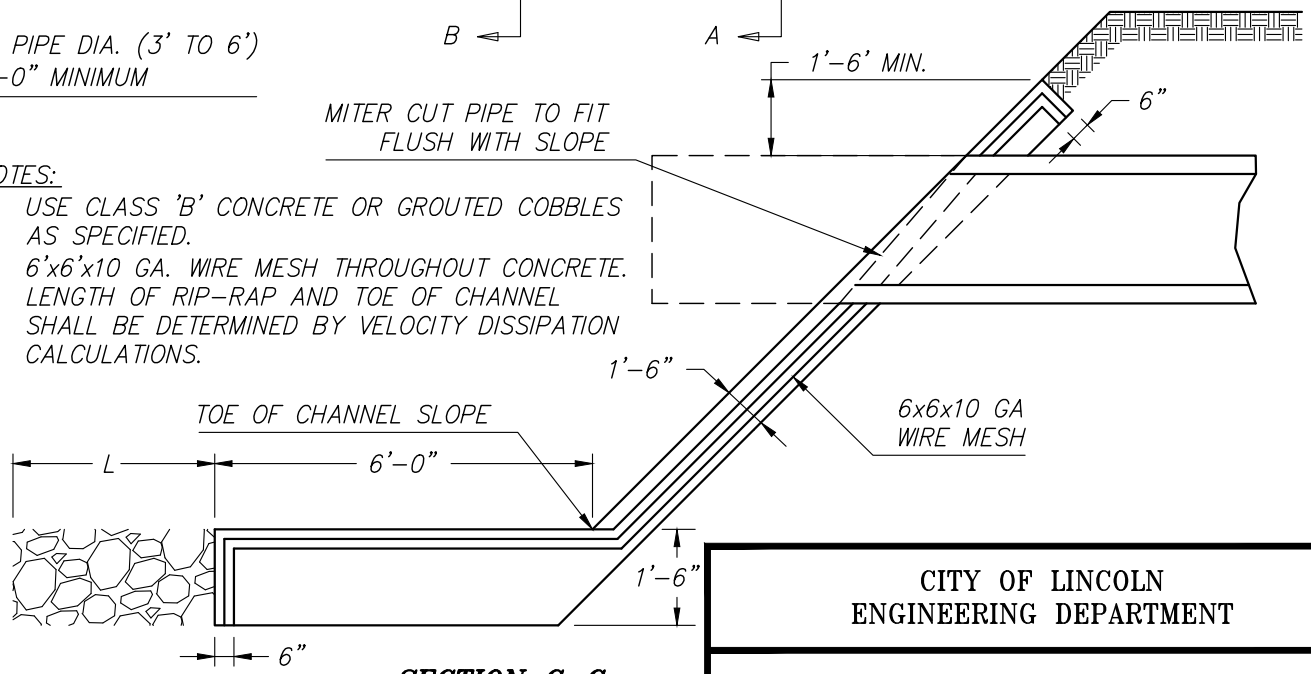

SECTION C-C

CITY OF LINCOLN
ENGINEERING DEPARTMENT

EROSION CONTROL
PIPE DISCHARGE

REVISIONS:	DATES:	APPROVED:
		CITY ENGINEER DATE

SCALE: NONE
DATE: SEPTEMBER 2019
DRAWN BY: C.G.

SD-15

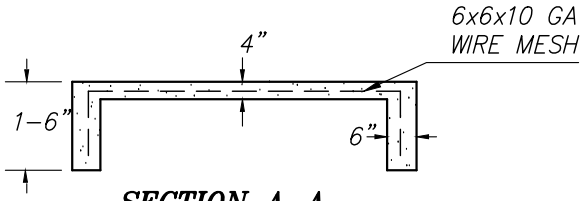

SECTION A-A

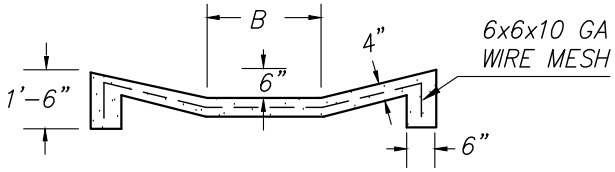

SECTION B-B

TOP VIEW

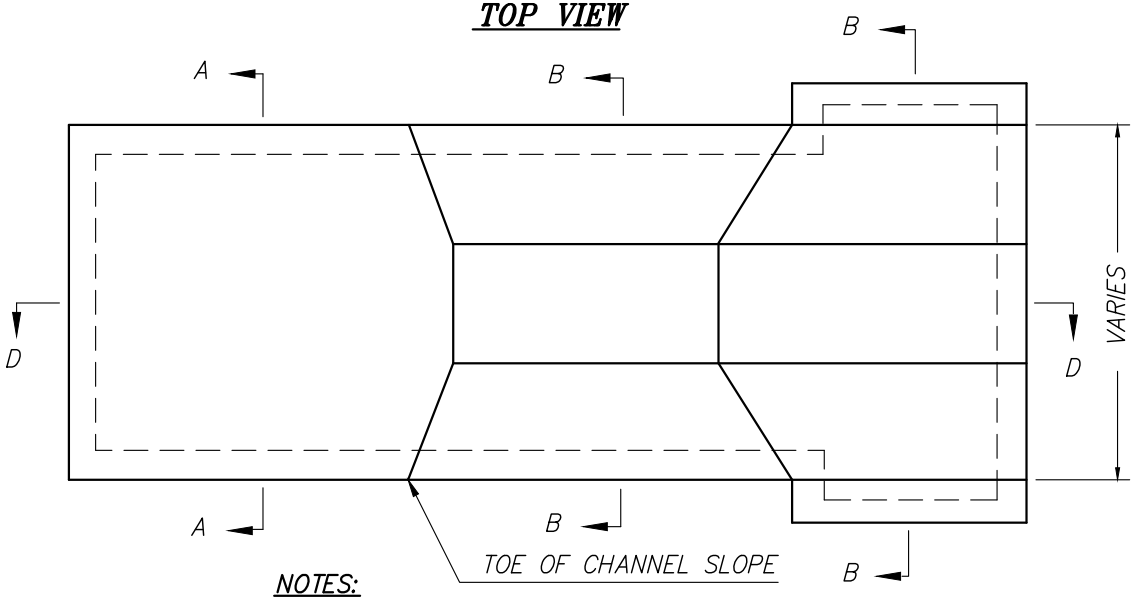

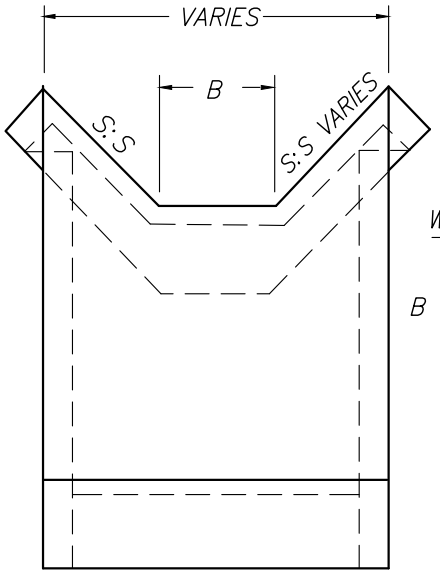

FRONT VIEW

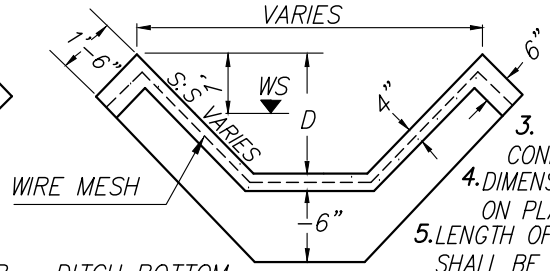

B = DITCH BOTTOM WIDTH OR AS SHOWN ON PLANS

SECTION C-C

NOTES:

1. USE CLASS 'B' CONCRETE OR GROUTED COBBLES AS SPECIFIED.
2. 6 X 6 X 10 GA WIRE MESH THROUGHOUT CONC.
3. ON LINED CHANNELS, APRON SHALL CONNECT TO SIDE LINING.
4. DIMENSIONS "B" AND "D" AS SPECIFIED ON PLANS.
5. LENGTH OF RIP-RAP AND TOE OF CHANNEL SHALL BE DETERMINED BY VELOCITY DISSIPATION CALCULATIONS.

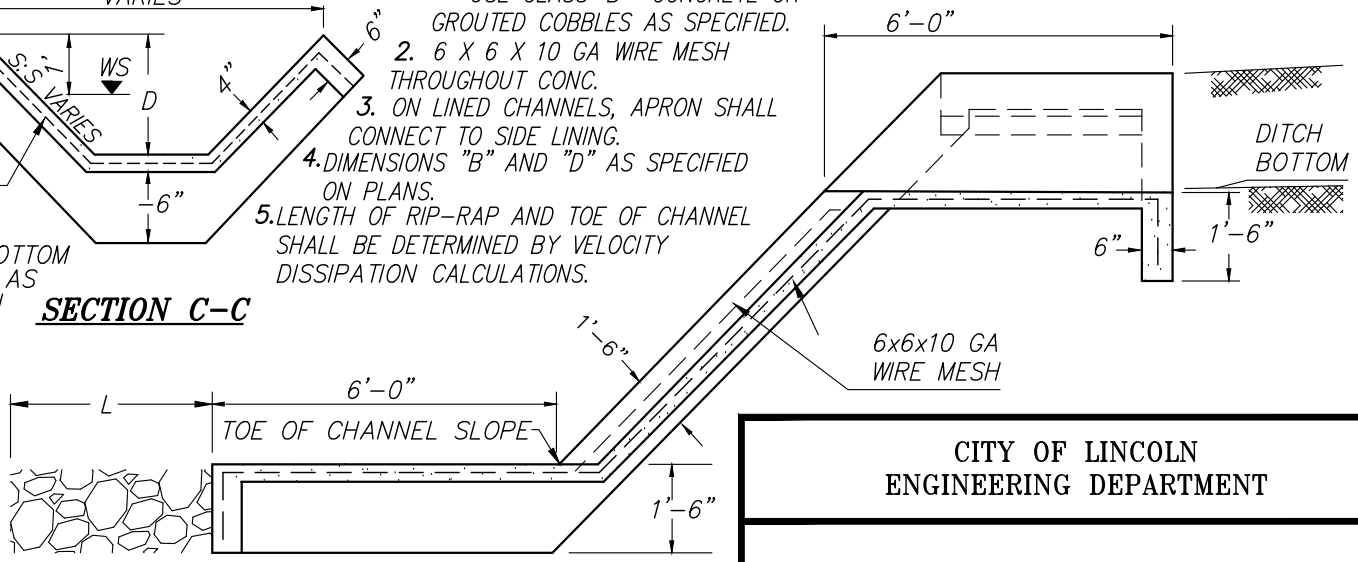

SECTION D-D

CITY OF LINCOLN
ENGINEERING DEPARTMENT

EROSION CONTROL DITCH DISCHARGE

REVISIONS:	DATES:	APPROVED:
		CITY ENGINEER DATE

SCALE: NONE
DATE: SEPTEMBER 2019
DRAWN BY: C.G.

SD-16

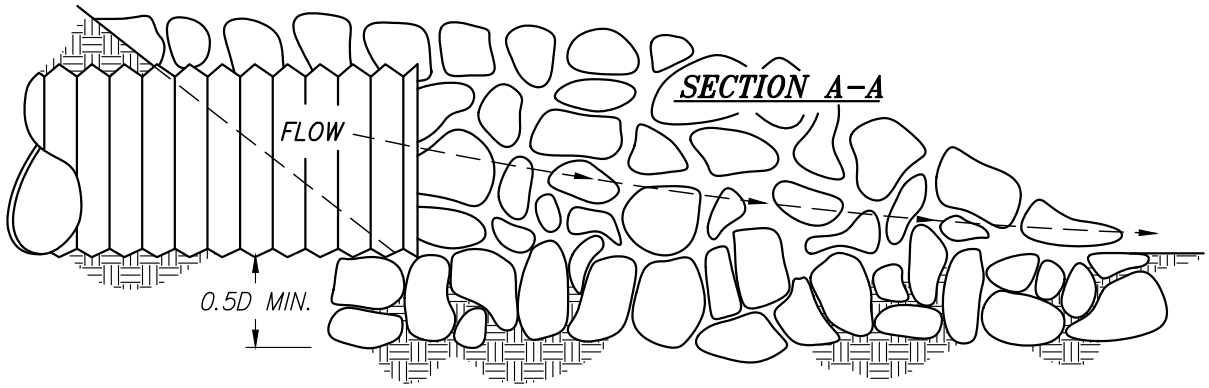

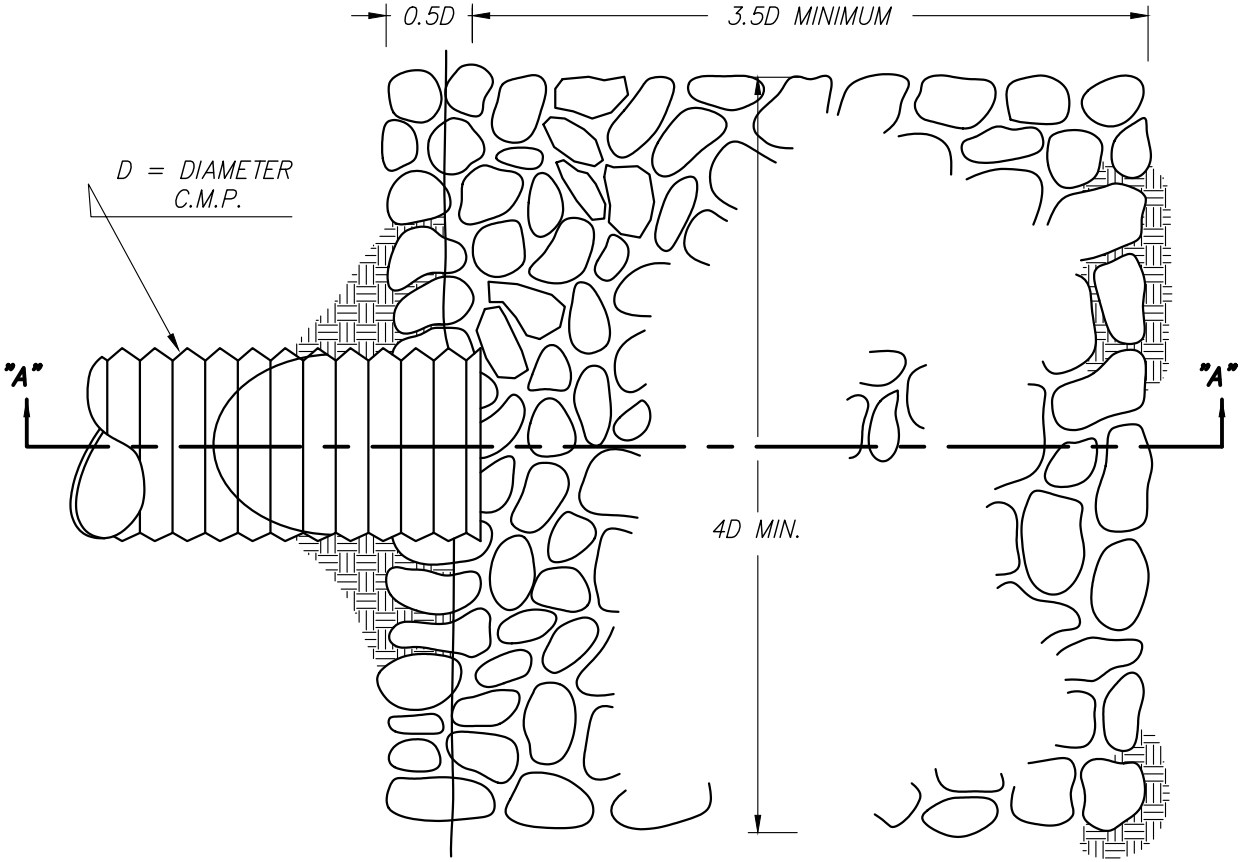

NOTES:

1. 50% OF ROCK SHALL BE LARGER THAN 0.5D AND SHALL CONFORM TO SECTION 72 OF THE CALTRANS STANDARD SPECIFICATIONS OR REFER TO CHART D AND TABLE 2 OF "BANK AND SHORE PROTECTION IN THE CALIFORNIA HIGHWAY PRACTICE" PAGES 112 AND 113.

2. "L" SHALL BE DETERMINED BY VELOCITY DISSIPATION CALCULATIONS.

CITY OF LINCOLN
ENGINEERING DEPARTMENT

CULVERT OUTFALL

REVISIONS:	DATES:	APPROVED:
		CITY ENGINEER DATE

SCALE: NONE
DATE: SEPTEMBER 2019
DRAWN BY: C.G.

SD-17

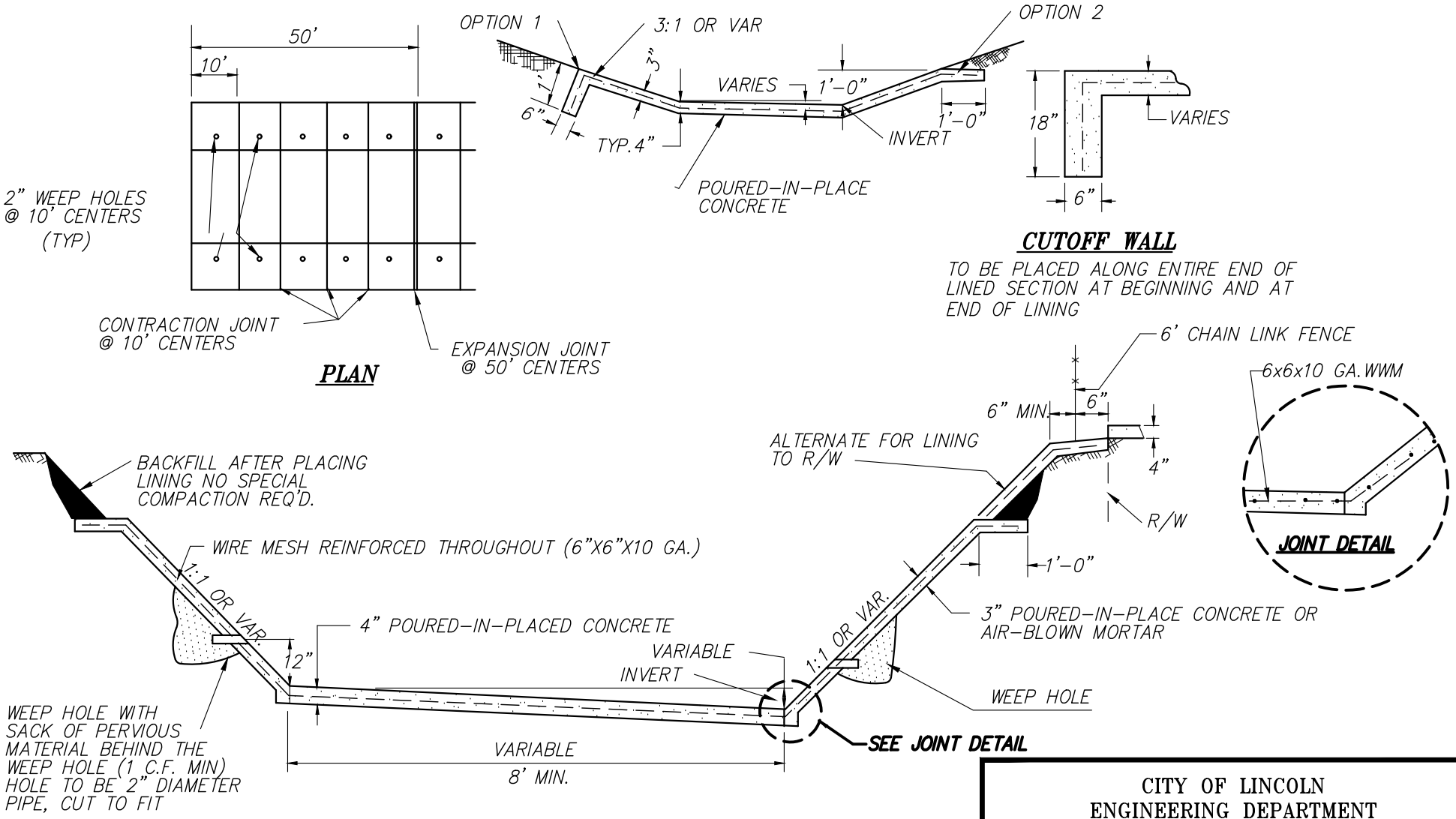

CITY OF LINCOLN
ENGINEERING DEPARTMENT

LINED CHANNEL SECTION

REVISIONS:	DATES:	APPROVED:
		CITY ENGINEER DATE

SCALE: NONE
DATE: SEPTEMBER 2019
DRAWN BY: C.G.

SD-18

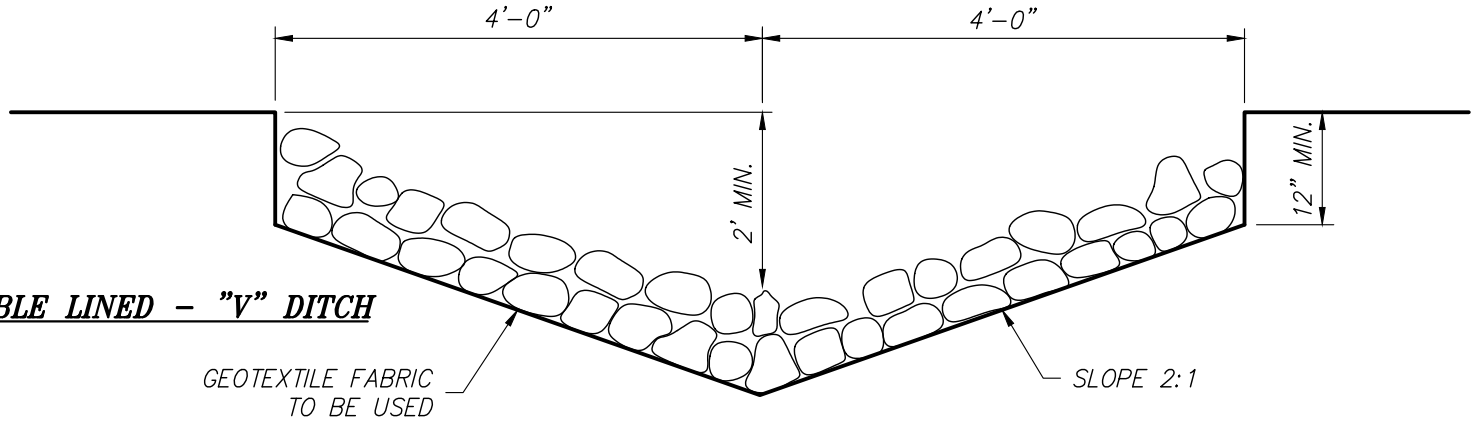

COBBLE LINED - "V" DITCH

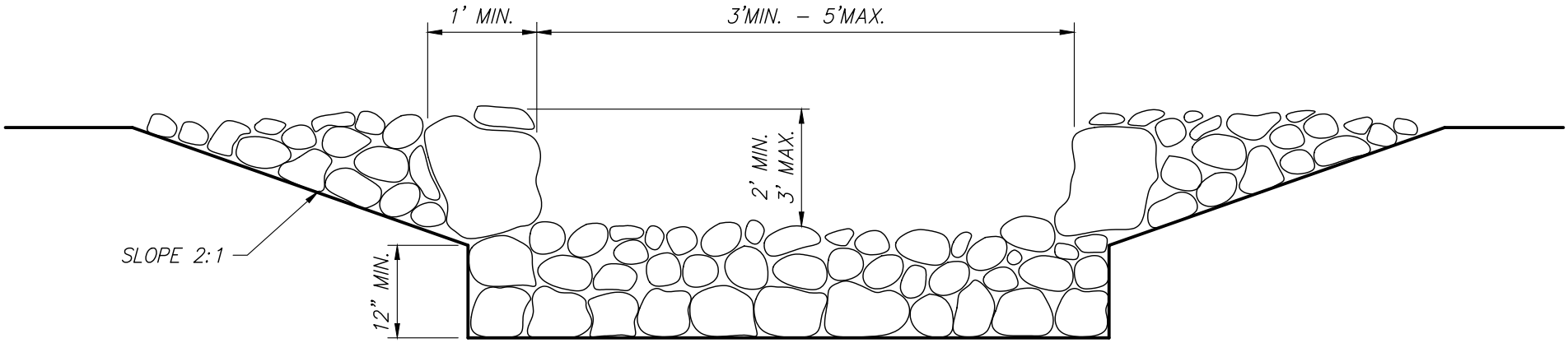

NOTE: *6" MIN. COBBLE SIZE*

CITY OF LINCOLN
ENGINEERING DEPARTMENT

ROCK LINED CHANNEL SECTION

REVISIONS:	DATES:	APPROVED:
		CITY ENGINEER DATE

SCALE: NONE
DATE: SEPTEMBER 2019
DRAWN BY: C.G.

SD-19

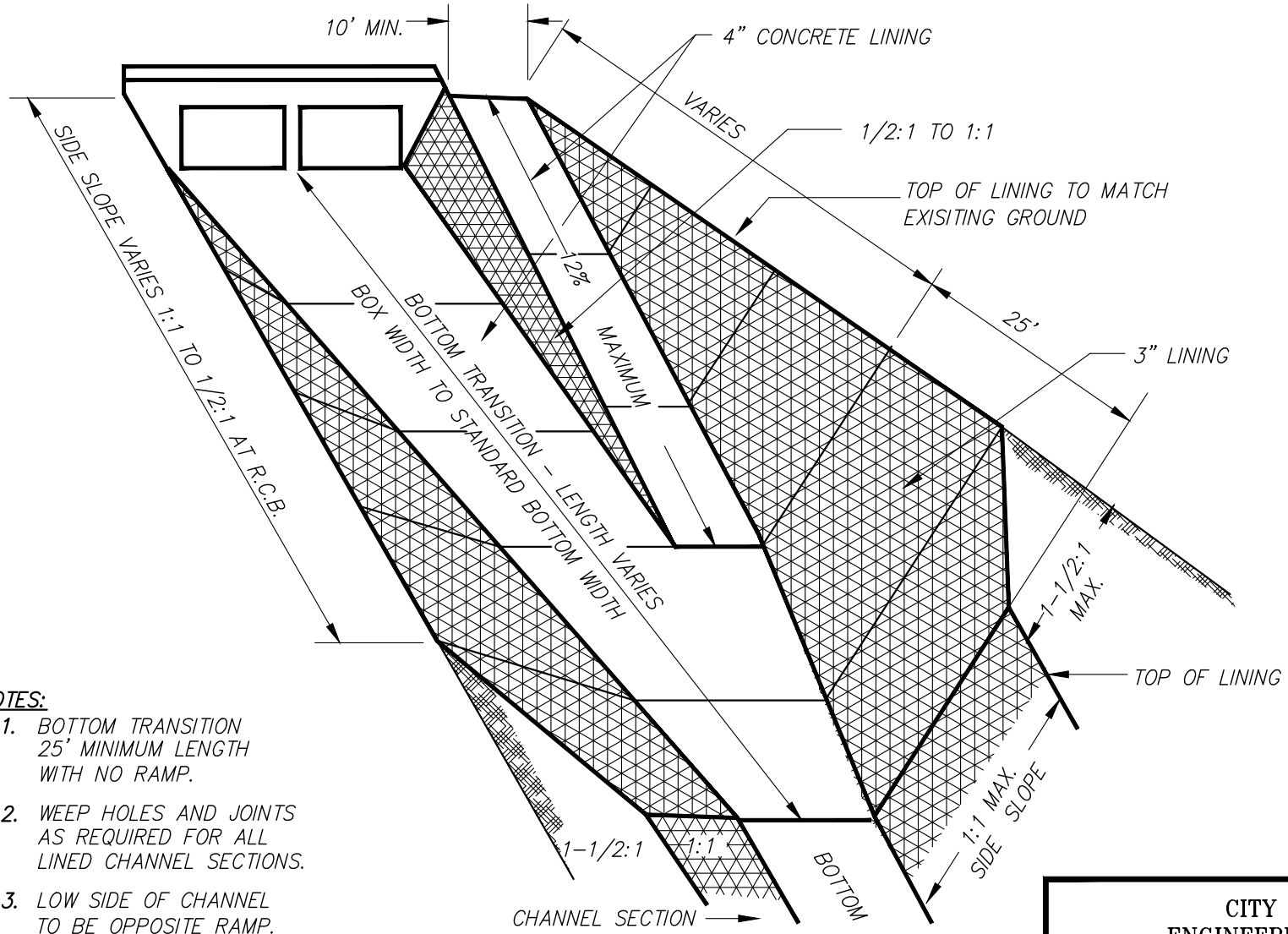

NOTES:

1. BOTTOM TRANSITION 25' MINIMUM LENGTH WITH NO RAMP.
2. WEEP HOLES AND JOINTS AS REQUIRED FOR ALL LINED CHANNEL SECTIONS.
3. LOW SIDE OF CHANNEL TO BE OPPOSITE RAMP.
4. SIDE SLOPE LINING MAY BE DELETED ON CHANNELS WITH BOTTOM LINING ONLY

CITY OF LINCOLN
ENGINEERING DEPARTMENT

ACCESS RAMP DETAIL

REVISIONS:	DATES:	APPROVED:
		CITY ENGINEER DATE

SCALE: NONE
DATE: SEPTEMBER 2019
DRAWN BY: C.G.

SD-20

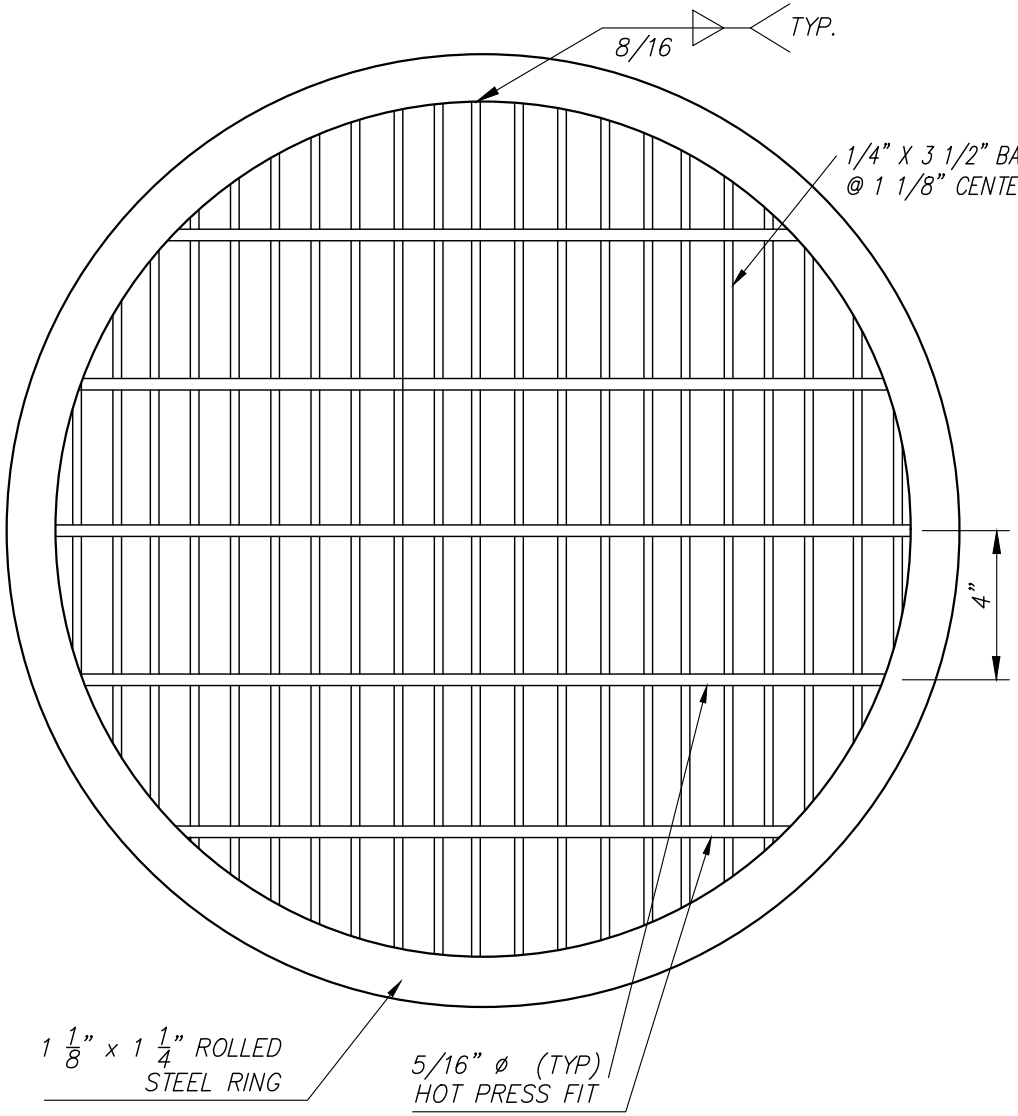

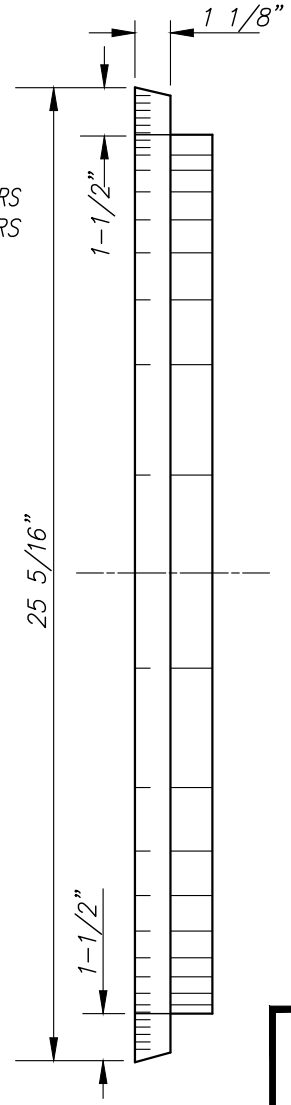

NOTES:

1. MANHOLE COVER SHALL FIT FRAME SHOWN ON DRAWING SD-22.
2. SEATING SURFACES SHALL BE MACHINED AS SHOWN IN DETAIL ON DRAWING SD-22.
3. THIS COVER MAY BE USED ONLY WITH APPROVAL OF ENGINEER
4. GALVANIZE AFTER FABRICATION.

CITY OF LINCOLN
ENGINEERING DEPARTMENT

GRATE TYPE MANHOLE COVER

REVISIONS:	DATES:	APPROVED:
		CITY ENGINEER DATE

SCALE: NONE
DATE: SEPTEMBER 2019
DRAWN BY: C.G.

SD-21

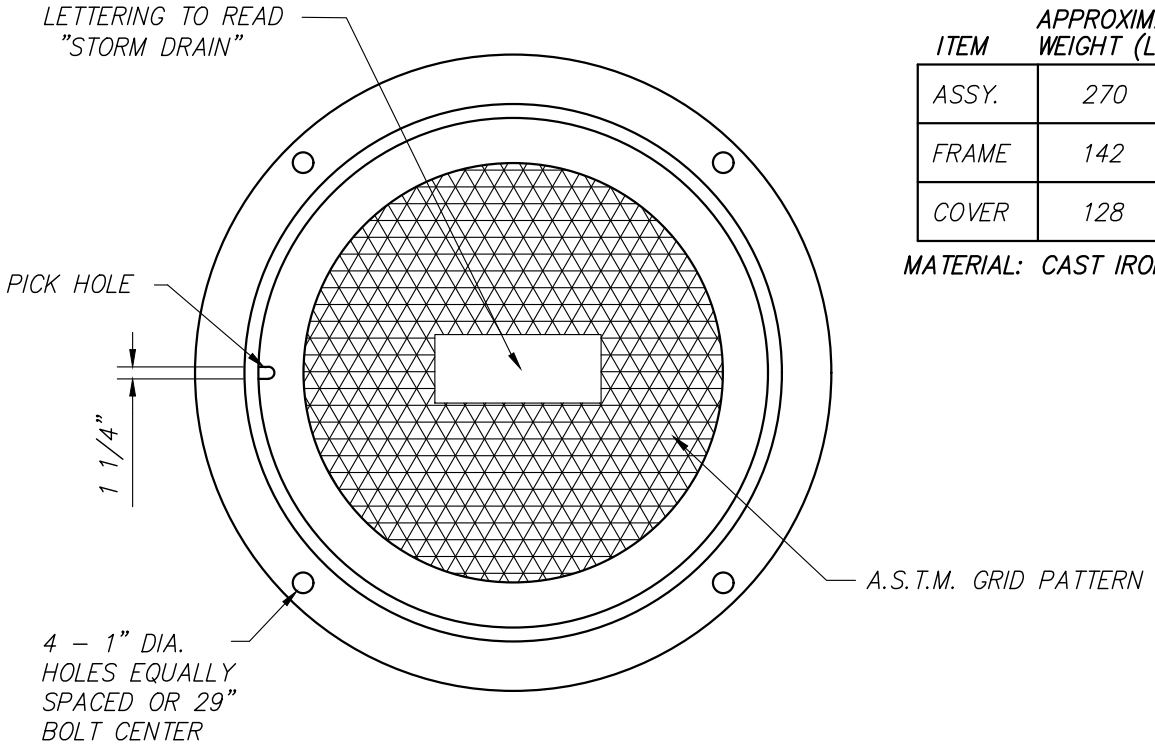

ITEM	APPROXIMATE WEIGHT (LBS.)
ASSY.	270
FRAME	142
COVER	128

MATERIAL: CAST IRON

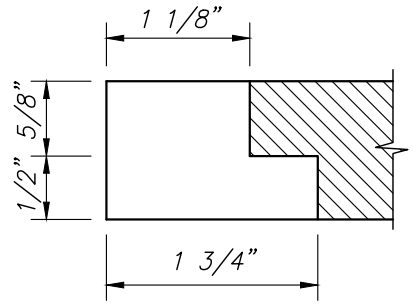

SECTION THROUGH CENTER OF PICK HOLE

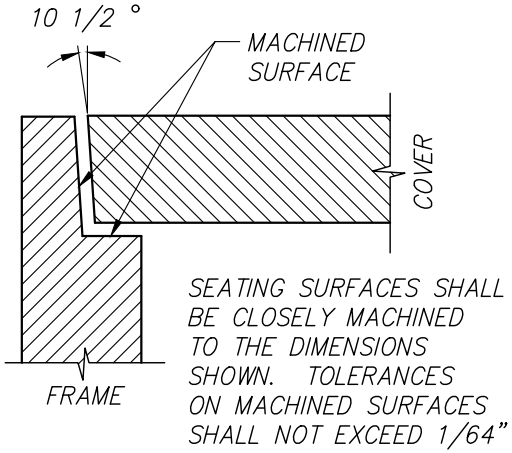

DETAIL A

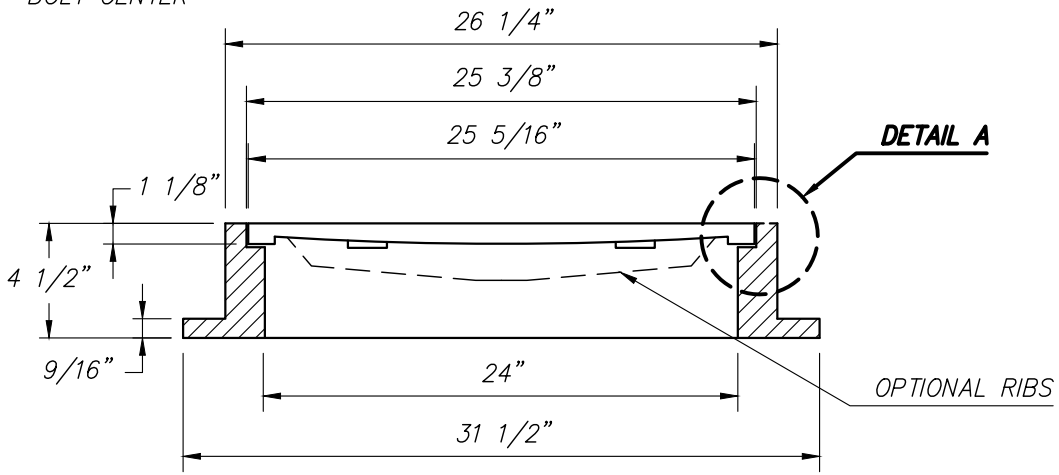

NOTE: ALL MATERIALS TO BE MADE IN U.S.A.

CITY OF LINCOLN
ENGINEERING DEPARTMENT

STANDARD 24" MANHOLE FRAME & COVER

REVISIONS:	DATES:	APPROVED:
		CITY ENGINEER DATE

SCALE: NONE
DATE: SEPTEMBER 2019
DRAWN BY: C.G.

SD-22

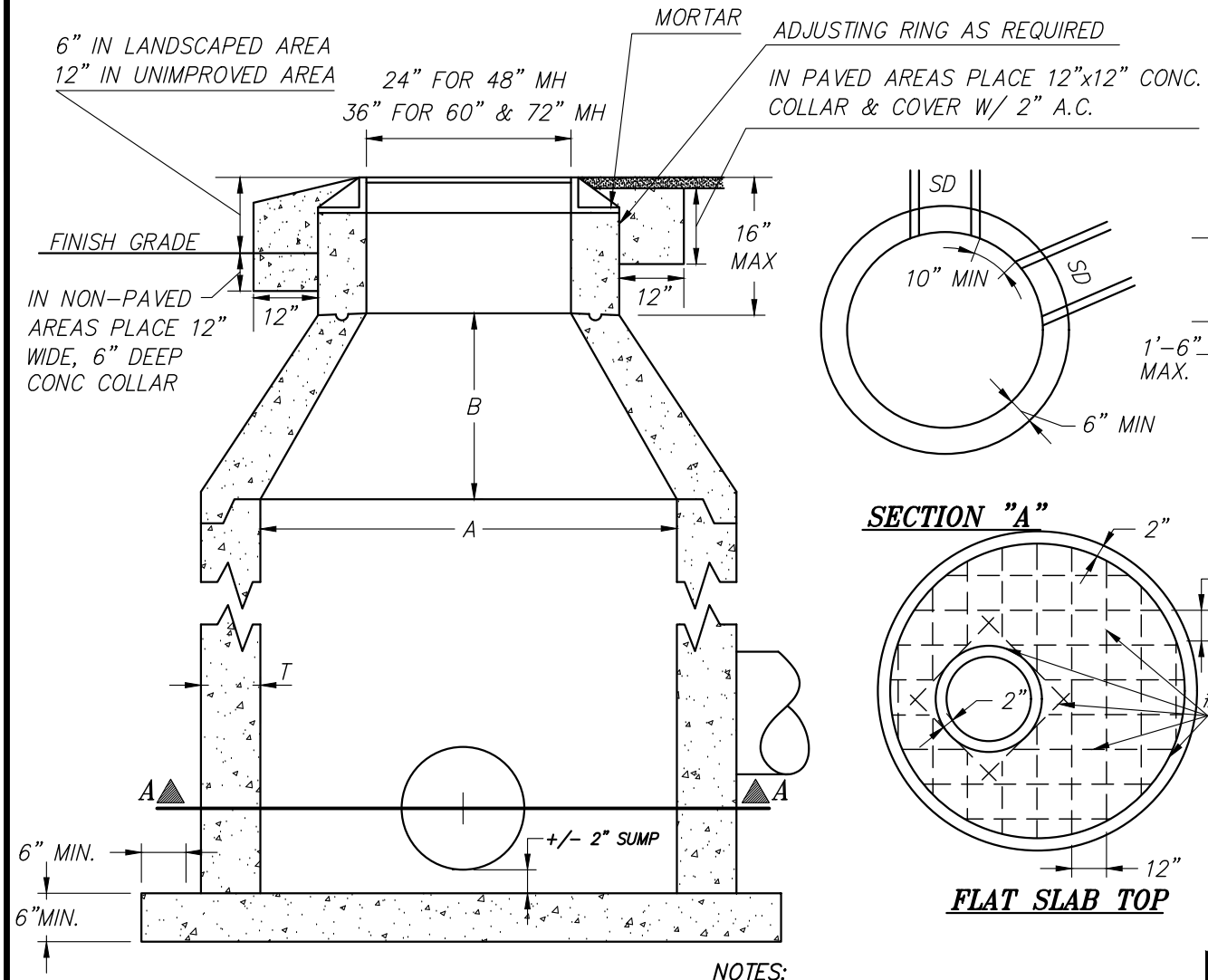

SUMP SHALL BE 2" DEEP (TYP.), MEASURED FROM INVERT OF OUTFALL PIPE. SUMP NOT REQUIRED IF DIAMETER OF OUTFALL PIPE IS 24" OR LARGER, OR IF M.H. IS NOT WITHIN PUBLIC R/W OR OTHER AREA WITH VEHICULAR ACCESS. A 12" DEEP SUMP WILL BE REQUIRED IN ALL MANHOLES DISHARGING DIRECTLY TO WATERWAYS OR OPEN SPACES.

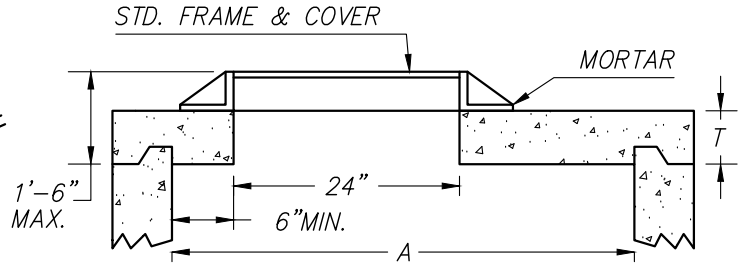

FLAT SLAB SHALL BE USED WHEN DEPTH DOES NOT PERMIT USE OF TAPER UNIT

SECTION "A"

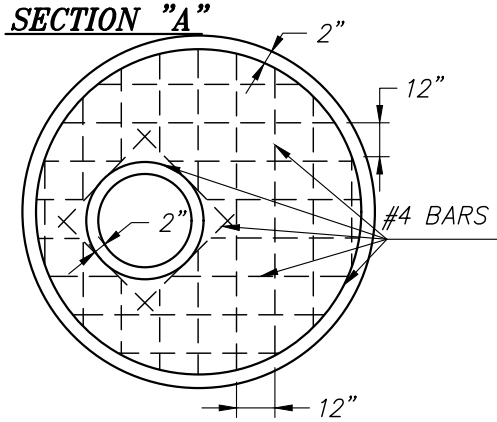

FLAT SLAB TOP

TABLE OF DIMENSIONS

M.H.	A	B	T MIN
48"	48"	16"	6"
60"	60"	30"	8"
72"	72"	42"	8"

DIMENSION "B" IS A MINIMUM DIMENSION AND MAY BE GREATER IF DEPTH PERMITS.

RISER SECTIONS, CONES, AND ADJUSTING RINGS SHALL CONFORM TO ASTM DESIGNATION C-478

FRAME SHALL BE SECURED TO RISER OR FLAT SLAB TOP WITH CEMENT MORTAR

CLASS A CONCRETE

NOTES:

1. JOINTS MAY BE EITHER KEYED OR TONGUE AND GROOVE.
2. SEE SS-1A FOR MANHOLE BACKFILL REQUIREMENTS.
3. 10" MINIMUM SEPARATION (OD TO OD) FOR PIPES ENTERING.

CITY OF LINCOLN
ENGINEERING DEPARTMENT

STANDARD PRECAST STORM MANHOLE

REVISIONS:	DATES:	APPROVED:
		CITY ENGINEER DATE

SCALE: NONE
DATE: SEPTEMBER 2019
DRAWN BY: C.G.

SD-23

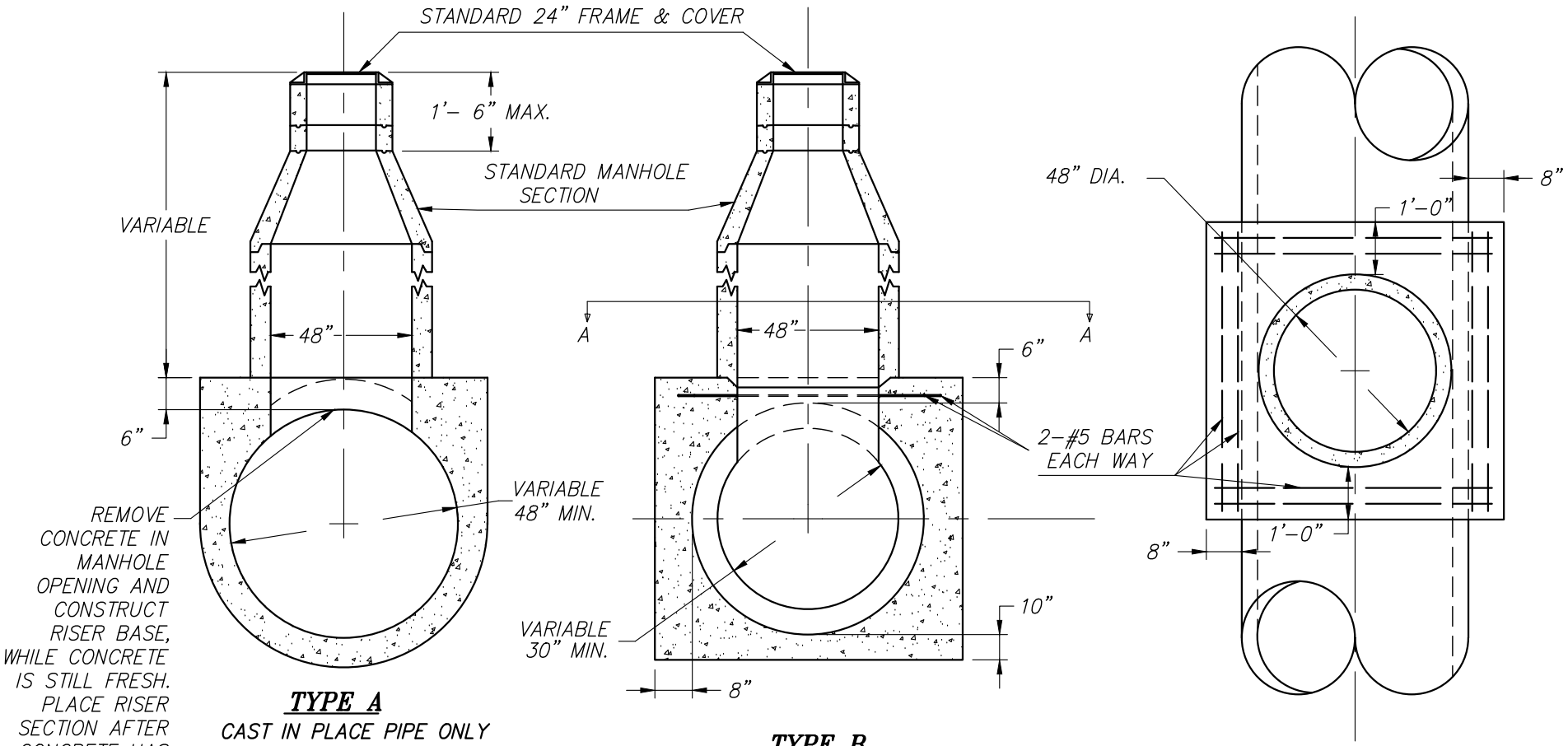

TYPE A

CAST IN PLACE PIPE ONLY

TYPE B

1. ALL PIPE OTHER THAN CAST-IN-PLACE PIPE.
2. CAST-IN-PLACE PIPE LESS THAN 48" DIA.

SECTION A-A

NOTE: SEE SS-1A FOR MANHOLE BACKFILL REQUIREMENTS.

CITY OF LINCOLN
ENGINEERING DEPARTMENT

TYPE "A" & "B"
SADDLE MANHOLE

REVISIONS:	DATES:	APPROVED:
		CITY ENGINEER DATE

SCALE: NONE
DATE: SEPTEMBER 2019
DRAWN BY: C.G.

SD-24

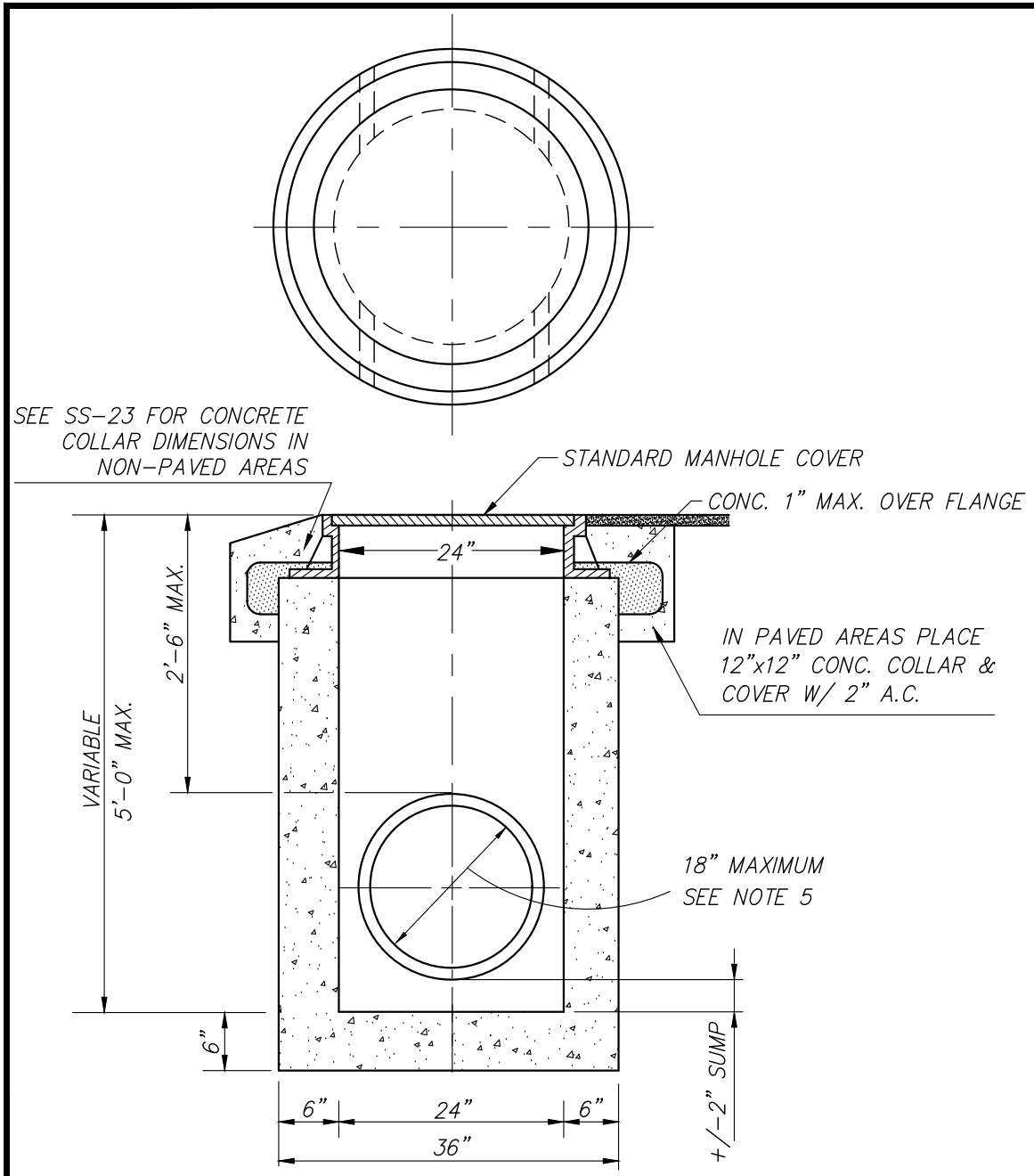

NOTES:

1. USED WHERE TOP OF PIPE IS LESS THAN 30" BELOW SURFACE
2. WALL THICKNESS OF MANHOLE DOES NOT APPLY WHEN CLASS II R.C.P. IS USED.
3. USE CLASS "A" CONCRETE OR CLASS II R.C.P.
4. WHEN MANHOLE IS CAST-IN-PLACE, WALL THICKNESS SHALL NOT VARY MORE THAN 1 INCH FROM THAT SHOWN
5. WHEN USED AT ANGLE POINTS, MAX. PIPE SIZE TO BE 12 INCHES.
6. 2" SUMP TO BE MEASURED FROM INVERT OF OUTFALL PIPE.
7. SUMP NOT REQUIRED WHEN MANHOLE LOCATED IN AREA WITHOUT VEHICULAR ACCESS.
8. ALL MANHOLE COVERS TO BE MADE IN U.S.A.
9. SEE SS-1A FOR MANHOLE BACKFILL REQUIREMENTS.

CITY OF LINCOLN
ENGINEERING DEPARTMENT

24" STORM MANHOLE

REVISIONS:	DATES:	APPROVED:
		CITY ENGINEER DATE

SCALE: NONE
DATE: SEPTEMBER 2019
DRAWN BY: C.G.

SD-25

MAXIMUM TRENCH DEPTH
MEASURED SURFACE TO BOTTOM OF TRENCH INFEET

DIAMETER	REINFORCED CONCRETE PIPE –CLASS–					VCP E.S.
	I	II	III	IV	V	
10	NOT PERMITTED				NO LIMIT	NO LIMIT
12		8	12	30		
15		10	15	35		
18		11	16	38		
21		12	17	39		
24		12	18	39		
27		13	19	39		
30		14	19	38		
33		14	20	38		
36		13	17	27	69	25
42		14	18	29	62	APPROVED ON DESIGN BASIS
48		15	19	30	60	
54		16	20	31	58	
60	14	16	21	31	57	
66	15	17	22	32	56	
72	15	18	23	33	56	

MINIMUM TRENCH DEPTH
MEASURED SURFACE TO TOP OF PIPE IN INCHES

TYPE	CLASS	MIN. COVER	
		STREET	OFF ST.
REIN. CONCRETE	I	27	12
	II	24	12
	III	18	12
	IV	12	12
	V	12	12
VCP	ES.	24	12
HDPE PVC	—	12" BELOW SUBGRADE	12

NOTES:

1. ALL DEPTHS SHOWN FOR FLEXIBLE PAVEMENT AND TRENCH WIDTH EQUAL TO O.D. OF PIPE PLUS 16" FOR PIPE 33" AND SMALLER IN INSIDE DIAMETER. TRENCH WIDTH EQUALS O.D. OF PIPE PLUS 24" FOR PIPE 36" AND LARGER IN INSIDE DIAMETER. TRENCH WIDTH MEASURED AT TOP OF PIPE.
2. THIS DETAIL SHALL BE A GUIDE ONLY. THE CITY REQUIRES THAT A NCPI LOAD CALCULATION BE RUN ON ALL PIPES FOR TRENCH LOAD DESIGN.

CITY OF LINCOLN
ENGINEERING DEPARTMENT

PIPE COVER REQUIREMENTS
RCP, VCP, HDPE

REVISIONS:	DATES:	APPROVED:
		CITY ENGINEER DATE

SCALE: NONE
DATE: SEPTEMBER 2019
DRAWN BY: C.G.

SD-26

MAXIMUM TRENCH DEPTH
MEASURED SURFACE TO BOTTOM OF TRENCH IN FEET

THICKNESS IN INCHES / DIA IN INCHES	CORRUGATED STEEL PIPE (C.S.P.)**					CORRUGATED ALUMINUM PIPE (C.A.P.)*				
	0.064	0.079	0.109	0.138	0.168	0.060	0.075	0.105	0.135	0.165
10						40				
12	100					35	40	50		
15	100					32	35	40		
18	100					26	30	35		
21	91	100				21	25	30		
24	80	100				13	21	30		
27	64	80				13	20	27		
30	64	80	100			12	19	25	30	
33	53	66	93				16	20	27	
36	53	66	93	100			15	18	25	30
42	46	57	80	100			13	15	20	29
48	40 48	50 70	70 66	90	100			15	18	27
54	43	44 62	62 75	80	98			13	15	25
60	39	49	56 69	72	88				10	20
66	36	44	51 62	64	78				10	18
72	32	41	56	55	68					15

NOT PERMITTED

MAXIMUM TRENCH DEPTH
MEASURED SURFACE TO TOP OF PIPE IN INCHES

(C.S.P.)		(C.A.P.)*
42' TO 60' R/W STREETS	MAJOR STREETS	OFF STREET ONLY
6	9	9
		9
		10
		10
	9	12
6	10	15
5	12	18
5	14	20
5	16	24

NOTES:

1. **–NORMAL PIPE CORRUGATION PROFILE IS 2 2/3"x 1" THE CORRUGATION OF THE PIPES WITHIN THE SHADED AREA SHALL HAVE PROFILE OF 3" x 1"
2. *–ALUMINUM PIPE IS NOT PERMITTED IN PUBLIC STREET RIGHT OF WAY.
3. WHEN FLOW VELOCITY EXCEEDS FIVE (5) F.P.S. THICKER METAL SHALL BE PROVIDED.

CITY OF LINCOLN
ENGINEERING DEPARTMENT

**PIPE COVER REQUIREMENT-
CSP & CAP**

REVISIONS:	DATES:	APPROVED:
		CITY ENGINEER DATE

SCALE: NONE
DATE: SEPTEMBER 2019
DRAWN BY: C.G.

SD-27

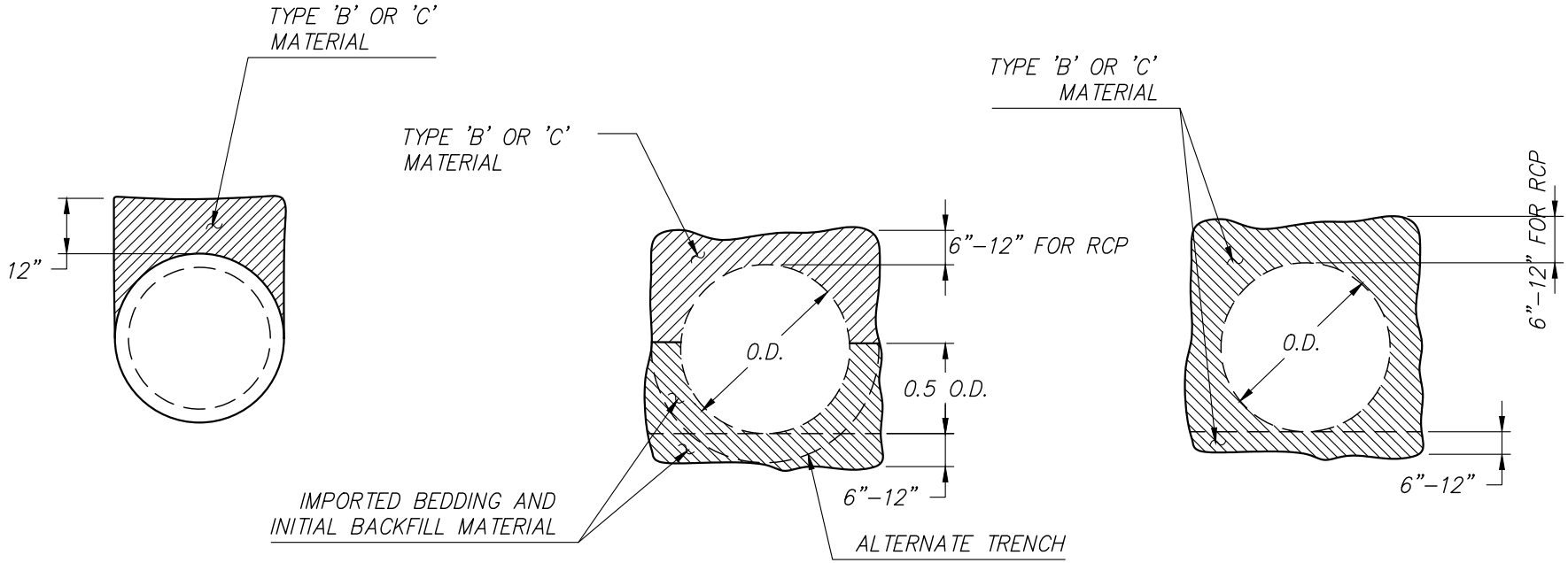

CAST–IN–PLACE CONCRETE PIPE

PIPES 24" OR GREATER IN DIAMETER

PIPES LESS THAN 24" IN DIAMETER

NOTES:

1. CAST–IN–PLACE CONCRETE PIPE REQ'S APPROVAL OF CITY ENGINEER. AND DETAILED SOILS REPORT.
2. INITIAL BEDDING AND BACKFILL MATERIAL SHALL CONFORM TO SEWER TRENCH DETAIL SD–29. (EXCEPT AS NOTED ABOVE)
3. BEDDING AND INITIAL BACKFILL TO CONFORM TO MANUFACTURER'S SPECIFICATION.
4. GEOTEXTILE WRAP MAY BE REQUIRED BY SOILS ENGINEER OR CITY ENGINEER DUE TO SOILS CONDITION.

CITY OF LINCOLN
ENGINEERING DEPARTMENT

PIPE BEDDING & INITIAL BACKFILL

REVISIONS:	DATES:	APPROVED:
		CITY ENGINEER DATE

SCALE: NONE
DATE: SEPTEMBER 2019
DRAWN BY: C.G.

SD-28

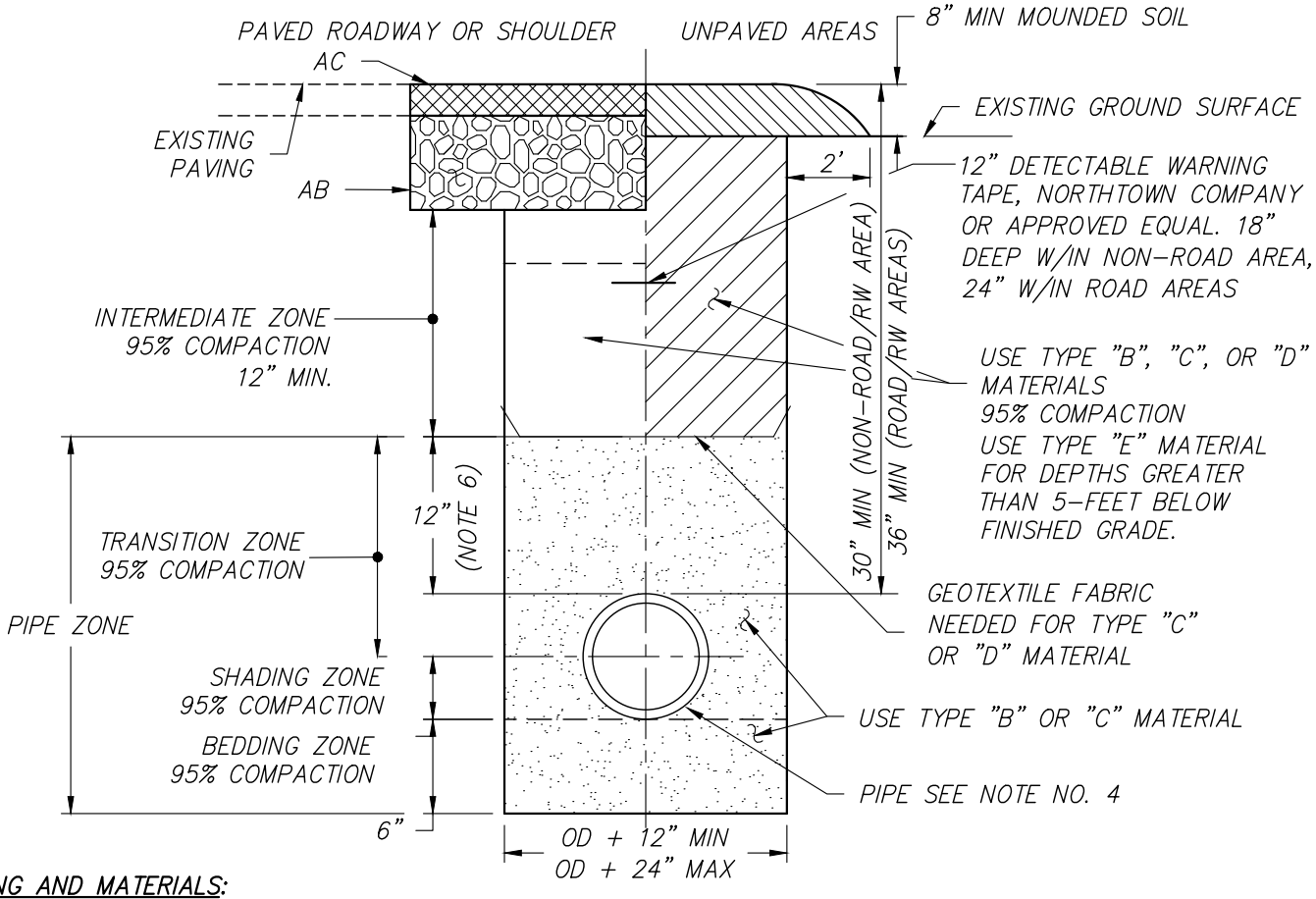

BEDDING AND MATERIALS:

TYPE "B" MATERIAL: CLASS 2 AGGREGATE BASE PER CALTRANS STANDARD SPECIFICATIONS.

TYPE "C" MATERIAL: MATERIAL WILL CONSIST OF GRAVEL OR CRUSHED ROCK. MATERIAL WILL BE SCREENED AND NON-WASHED WITH A MINIMUM SAND EQUIVALENT OF 30 PER CTM217. ALL MATERIAL WILL BE FREE OF WOOD, ROOTS, OR OTHER DELETERIOUS MATERIAL. MATERIAL TO BE 1/2" MINUS FOR 12-INCH PIPE OR SMALLER AND 3/4" MINUS FOR PIPE GREATER THAN 12-INCHES IN DIAMETER. GROUNDWATER CONDITIONS WILL REQUIRE 3/4" UNIFORM CRUSHED ROCK REGARDLESS OF PIPE DIAMETER. DRAIN ROCK WILL BE WRAPPED IN A LAYER OF GEOTEXTILE FABRIC.

TYPE "D" MATERIAL: CRUSHED ROCK OR SOIL-ROCK MIXTURE (NATIVE) NOT TO EXCEED 3". UP TO A 6" MINUS MATERIAL MAY BE USED WITH SPECIAL CONSIDERATIONS AND CONDITIONS APPROVED BY CITY AND GEOTECHNICAL ENGINEER. THE MATERIAL WILL BE COMPLETELY FREE OF WOOD, ROOTS OR OTHER DELETERIOUS MATERIAL. MATERIAL NOT BE USED WITHIN 24" OF TOP OF PIPE WITHOUT CITY ENGINEERS APPROVAL. COMPACTION WILL BE BY VIBRATORY EQUIPMENT OR OTHER APPROVED DEVICES. THE CITY MAY REQUIRE THAT THE MATERIAL BE SCREENED. A LAYER OF GEOTEXTILE FABRIC WILL BE PLACED BETWEEN THE PIPES AND INTERMEDIATE BACKFILL ZONE. MATERIAL WILL ONLY BE USED WITH GEOTECHNICAL ENGINEER'S RECOMMENDATION AND WITH APPROVAL OF THE CITY ENGINEER.

TYPE "E" MATERIAL: A LOW STRENGTH, CONCRETE SLURRY TYPE BACKFILL MATERIAL MADE WITH A MIXTURE OF CEMENT, FLY-ASH, SAND, AND AGGREGATE. TO BE USED FOR INTERMEDIATE ZONE BACKFILL AT DEPTHS GREATER THAN 5-FEET BELOW FINISHED GRADE. FOR REFERENCE, REFER TO SECTION 3-9 "MATERIAL".

NOTES:

1. CREEK CROSSING OR SHALLOW TRENCH SHALL REQUIRE SPECIAL PIPE PER APPROVAL OF CITY ENGINEER.
2. BEDDING FOR OTHER APPROVED PIPE TO BE APPROVED BY CITY ENGINEER AND PER ASTM C12.
3. CITY WILL REQUIRE CUT-OFF WALLS IN TRENCHES TO CONTROL PERMEABILITY AND/OR REQUIRE GEOTEXTILE BARRIER WRAP FOR MATERIAL NOT MEETING A TYPE "A" OR "B" MATERIAL SPEC.
4. EXTREME CARE NEEDED TO AVOID DISPLACING HDPE PIPE DURING BACKFILL.
5. SHOVEL SLICING TO BE USED ALONG WITH MECHANICAL (VIBRATORY) AT 12" MAX LOOSE LIFTS.
6. TYPE "D" MATERIAL REQUIRES 24" INCHES BACKFILL ABOVE PIPE.
7. TYPE "C" AND "D" MATERIALS MAY ONLY BE USED WITH CITY ENGINEER APPROVAL AND GEOTECHNICAL ENGINEER RECOMMENDATION.

CITY OF LINCOLN
ENGINEERING DEPARTMENT

STORM DRAIN TRENCH DETAIL

REVISIONS:	DATES:	APPROVED:
		CITY ENGINEER DATE

SCALE: NONE
DATE: SEPTEMBER 2019
DRAWN BY: C.G.

SD-29

A PUBLIC NOTICE SHALL BE PLACED ADJACENT TO ALL DRAIN INLETS IN ACCORDANCE WITH THE DETAIL BELOW.

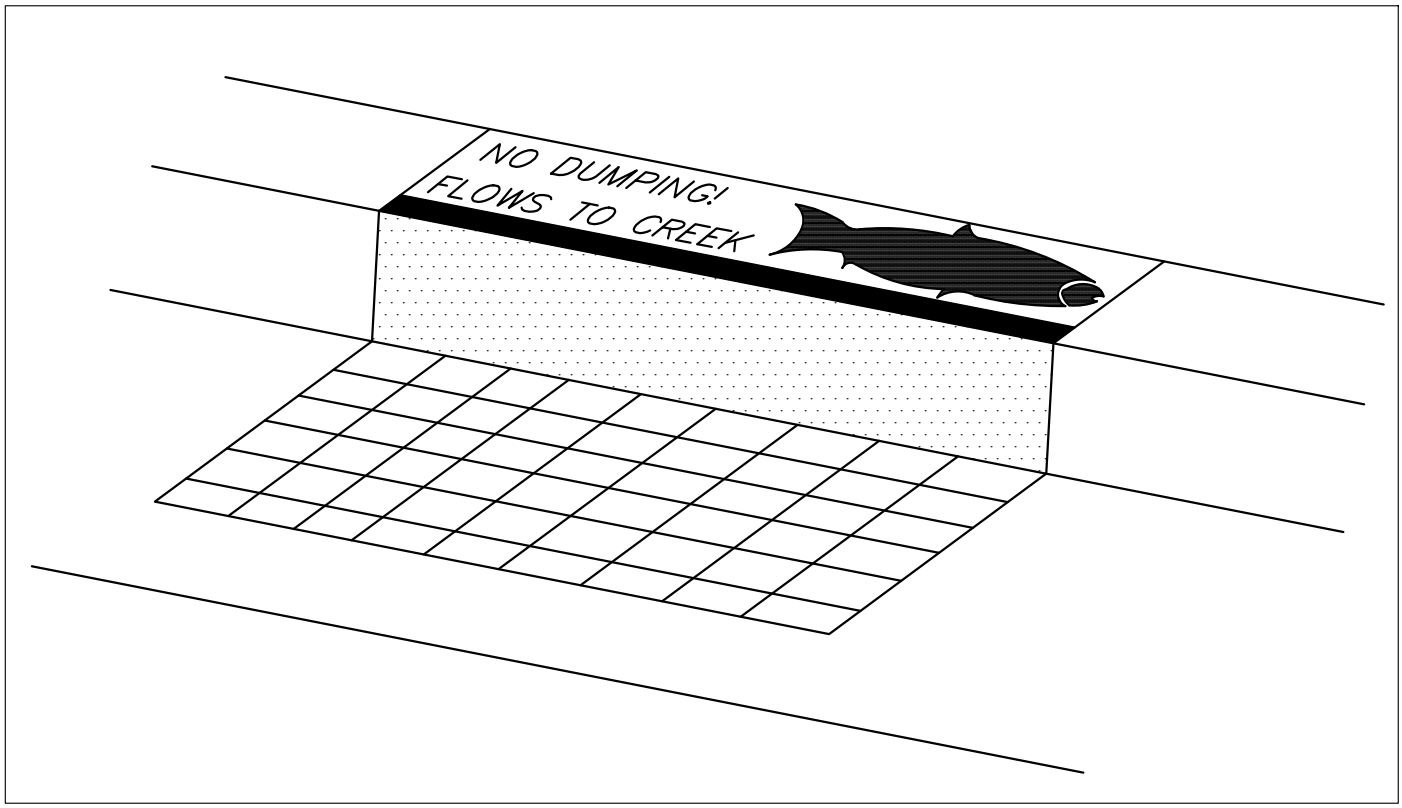

NOTES:

1. MESSAGE AND SYMBOL SHALL BE PERMANENTLY PLACED WITH THE USE OF BOMACRON OR ANOTHER METHOD APPROVED BY THE CITY OF LINCOLN PRIOR TO THE CONSTRUCTION OF THE CURB AND GUTTER.
2. LETTERS SHALL BE 1-1/2" IN HEIGHT. OUTSIDE DIMENSION OF PUBLIC NOTICE BACKGROUND SHALL BE 12" x MINIMUM OF 30" (FIT TO BACK OF INLET).
3. COLORS SHALL BE BLACK LETTERING AND GRAPHIC WITH GREY BACKGROUND.
4. PAINTING OF MESSAGE WILL NOT BE ALLOWED.
5. FOR AREA DRAIN INLETS, NOTICE WILL BE PLACED ADJACENT AND PARALLEL TO THE LONG AXIS OF THE DRAIN.

CITY OF LINCOLN
ENGINEERING DEPARTMENT

NO DUMPING PUBLIC NOTICE DETAIL

REVISIONS:	DATES:	APPROVED:
		CITY ENGINEER DATE

SCALE: NONE
DATE: SEPTEMBER 2019
DRAWN BY: C.G.

SD-30

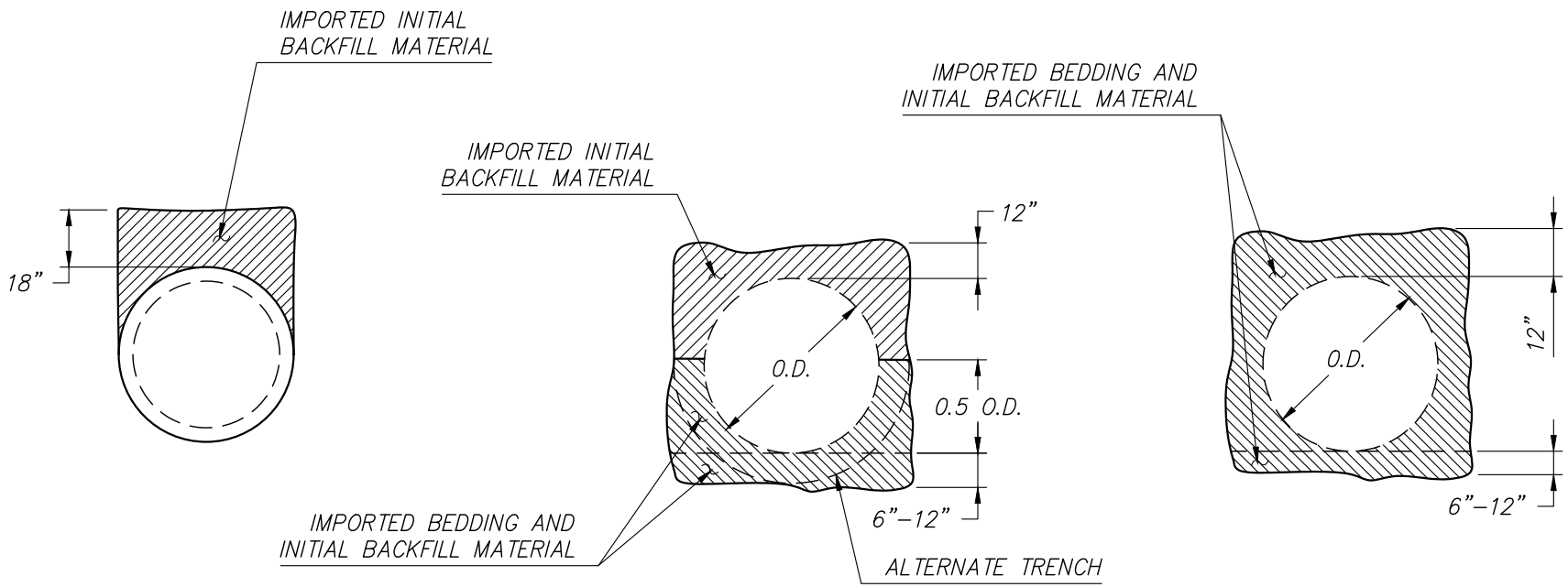

CAST–IN–PLACE CONCRETE PIPE

PIPES 24" OR GREATER IN DIAMETER

PIPES LESS THAN 24" IN DIAMETER

NOTES:

1. CAST–IN–PLACE CONCRETE PIPE REQ'S APPROVAL OF CITY ENGINEER. AND DETAILED SOILS REPORT.
2. INITIAL BEDDING AND BACKFILL MATERIAL SHALL CONFORM TO SEWER TRENCH DETAIL SD–29.
3. BEDDING AND INITIAL BACKFILL TO CONFORM TO MANUFACTURER'S SPECIFICATION.
4. GEOTEXTILE WRAP MAY BE REQUIRED BY SOILS ENGINEER OR CITY ENGINEER DUE TO SOILS CONDITION.

CITY OF LINCOLN
ENGINEERING DEPARTMENT

PIPE BEDDING & INITIAL BACKFILL

REVISIONS:	DATES:	APPROVED:
		CITY ENGINEER DATE

SCALE: NONE
DATE: SEPTEMBER 2019
DRAWN BY: C.G.

SD-30A

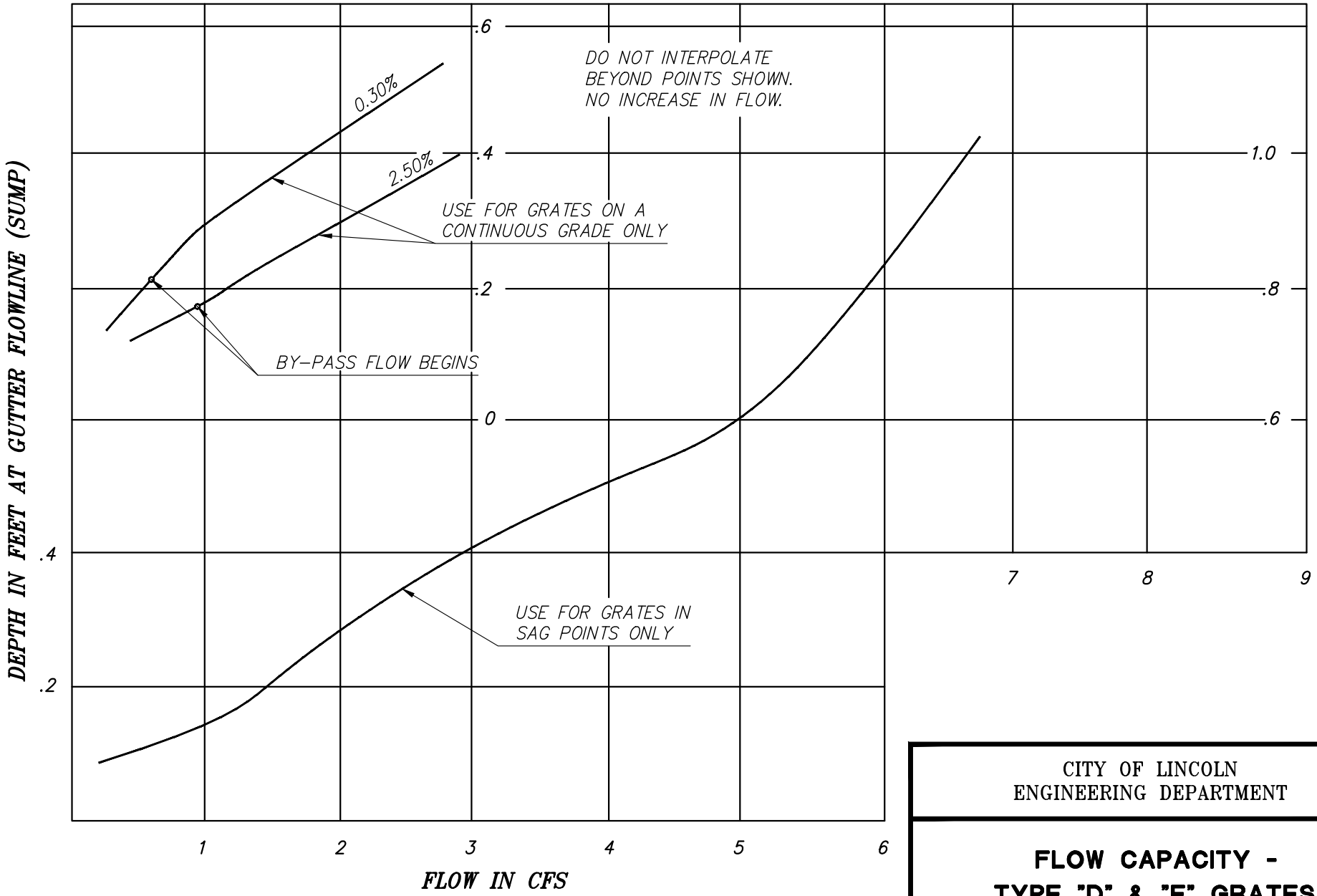

CITY OF LINCOLN
ENGINEERING DEPARTMENT

FLOW CAPACITY -
TYPE "D" & "E" GRATES

REVISIONS:	DATES:	APPROVED:
		CITY ENGINEER DATE

SCALE: NONE
DATE: SEPTEMBER 2019
DRAWN BY: C.G.

SD-32

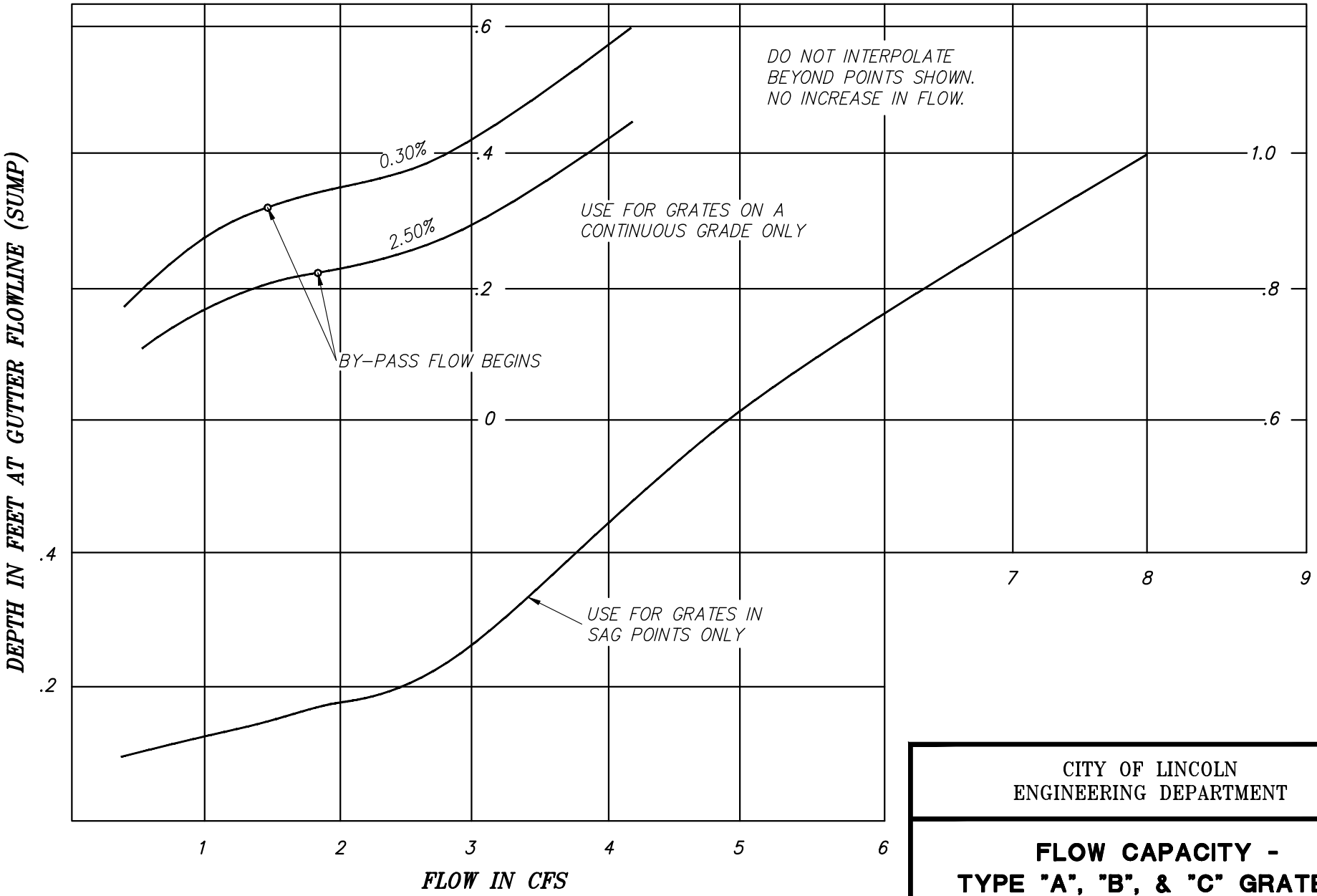

CITY OF LINCOLN
ENGINEERING DEPARTMENT

FLOW CAPACITY -
TYPE "A", "B", & "C" GRATES

REVISIONS:	DATES:	APPROVED:
		CITY ENGINEER DATE

SCALE: NONE
DATE: SEPTEMBER 2019
DRAWN BY: C.G.

SD-31

[THIS PAGE INTENTIONALLY LEFT BLANK]

SECTION 7
GRADING (G)

7-1 General G-1
7-2 Clearing and Grubbing G-2
A. Vegetation and Debris G-2
B. Disposal G-2
7-3 Construction Staking G-2
A. Channel G-2
B. Storm Water Prevention Plan (SWPPP)/Sediment and Erosion Control Measures G-3
C. Pads G-3
D. Retaining and Sound Walls G-3
E. Roadways G-3
7-4 Construction Requirements G-3
A. Channels G-3
B. Storm Water Pollution Prevention Plan (SWPPP)/Sediment and Erosion Control Measures G-3
1. Seeding and Soil Stabilization G-3
2. Construction Water G-4
3. Water Valve Operation G-4
C. Pads G-4
D. Retaining Walls G-4
1. Concrete/Masonry Walls G-4
2. Wood Retaining Walls G-4
E. Roadways G-4
1. Compaction G-4
2. Grade Control G-4
3. Stability Testing G-4
4. Unsuitable Materials G-5
F. Grading Around Trees and Protected Areas G-5
1. Fencing G-5
2. Grade Changes G-5
3. Native Ground Surface Fabric G-5
4. Preservation Devices G-5
5. Retaining Walls G-5
6. Roots G-6
a. Minor Roots G-6
b. Major Roots G-6
7. Trenching G-6
7-5 Materials G-6
A. Dust Palliative G-6
B. Retaining Walls G-6
1. Concrete/Masonry Walls G-6
2. Wood Retaining Walls G-6
C. Tree Fencing G-6
1. Signs G-6
7-6 Grading Details G-7

[THIS PAGE INTENTIONALLY LEFT BLANK]

SECTION 7
GRADING (G)

7-1 **GENERAL -** All improvements within the City of Lincoln will be approved and permitted by the City and will conform to the City of Lincoln Design Criteria & Procedures Manual. Grading improvements will include clearing & grubbing, excavation and embankment work for channels, pads, roadways, erosion control measures, and retaining walls. These improvements will be installed in accordance with the following:

- Approved project improvement plans,
- City of Lincoln Public Facilities Improvement Standards
- California Building Code Appendix J
- City of Lincoln Ordinance 826B
- City of Lincoln Ordinance 876B
- County of Placer Grading Ordinance
- Caltrans Standard Specifications, latest edition

Should conflicts arise between documents, the approved project improvement plans will govern over these Public Facilities Improvement Standards. These Public Facilities Improvement Standards will govern over the latest edition of the CBC Appendix J and City of Lincoln Ordinances 826B and 876B, and the County of Placer Grading Ordinance. The CBC Appendix J, the City of Lincoln Ordinances 826B & 876B, and the County of Placer Grading Ordinance will govern over the Caltrans Standard Specifications. In the event of conflict between applicable documents and/or plans, the most restrictive will prevail.

Refer to the City of Lincoln's Design Criteria & Procedures Manual for design information.

The Project will comply with all applicable City, County, State, and Federal laws and regulations relating to construction of the improvements as required.

If the City Engineer determines that any work on private or public property constitutes a hazard to the health, safety, or welfare of the public; endangers property; adversely affects the safety, use or stability of adjacent property; an overhead or underground utility, or a public way, watercourse or drainage channel; or could adversely affect the air quality; or the water quality of any water bodies or water courses; the City Engineer may issue a stop work notice to the owner of the property upon which the condition is located, or other person or agent in control of such property. Upon receipt of such stop work notice, the recipient will, within the period specified therein, stop all work, obtain any necessary permits and conform to the requirements identified in the stop work notice. The City Engineer may require the submission of plans or other reports, detailed construction recommendations, studies, or other engineering data prior to and in connection with any corrective or proposed work or activity.

All improvements within the City of Lincoln will be performed by a contractor licensed in accordance with the California Contractors State license Law, Business and Professions Code Section 7000 et seq.

All persons, firms, partnerships, or corporations doing business of any nature in the City

of Lincoln will have a current Business License as stated in Chapter 5.04--License Tax, City of Lincoln Municipal Code. This includes developers, engineers, and contractors.

Prior to the start of any grading project of 50-cubic yards and greater, a grading permit will be obtained from the Community Development Director or City Engineer.

To obtain a grading permit, applicants will submit a Development Services – Development Application to the Community Development Department. Development Applications submitted for a Grading Permit also requires the submittal of a geotechnical report and a Storm Water Pollution Prevention Plan (SWPPP) or Water Pollution Control Plan (WPCP). Prior to submitting a Development Services – Development Application for a Grading Permit, the applicant will consult with Development Service Department Staff regarding the submittal of a SWPPP or WPCP.

The City of Lincoln has coverage under the Phase II Small MS4 General Permit that was adopted by the State Water Resources Control Board (Order No. 2013-0001 DWQ). The Permit requires the City to have a stormwater program that controls the discharge of pollutants into the City's storm drainage system and our waterways. If the grading permit project results in the disturbance of one-acre or more, the applicant is required to comply with the Phase II Small MS4 General Permit and Section A of the Statewide National Pollution Discharge Elimination System (NPDES) General Permit for Construction Activity. Applicant will provide the City a copy of the Notice of Intent (NOI) and SWPPP that includes the Waste Discharge Identification (WDID) number.

7-2 **CLEARING AND GRUBBING -** Clearing and grubbing will consist of removing all objectionable material from within the right of way, construction areas, or other areas that may be specified in these public facilities improvement standards, which interferes with the work.

A. Vegetation and Debris - All vegetation such as weeds, grass, shrubbery, roots and stumps and debris such as broken concrete and trash will be removed. Tree branches that extend over the roadway will be trimmed to provide a minimum vertical clearance of 14-feet. The contractor will remove or trim other tree branches as directed by the engineer so that the trees present a balanced appearance. Trees, shrubbery, lawns and other vegetation adjacent to the work that is not to be removed, will be protected from injury or damage resulting from the Contractors operations. Existing facilities such as pavements, curb and gutters, lawn sprinklers, mailboxes, and fences that interfere with the work will be removed under the item of clearing and grubbing unless the improvement plans provide for separate items.

B. Disposal - Material resulting from clearing and grubbing operations that are not salvaged or otherwise used will be disposed of outside the project limits in compliance with State and Federal law, and at the expense of the contractor.

7-3 **CONSTRUCTION STAKING –** Construction staking will be provided for all grading improvements listed below. Prior to construction, the City Engineer will be supplied with two sets of cut sheets and/or AutoCAD Drawing files in .DWG format that includes 3D surface features.

A. Channels - Channel staking will provide the station and offset, and the cut to the nearest 0.1-foot. Stakes will be provided at a minimum of every 50-feet in tangent

sections and every 25-feet in curved sections.

B. **Storm Water Prevention Plan (SWPPP) / Erosion Control Measures –** Erosion and sediment control measured will be staked as needed.

C. **Pads -** Pad staking will provide the station and offset, and the cut to the nearest 0.1-foot. Stakes will be provided at each property corner, front and rear.

D. **Retaining and Sound Walls -** Retaining walls will be staked for line and grade to the nearest 0.1-foot.

E. **Roadways -** Roadway excavation staking will provide the station and offset, and the cut to the nearest 0.1-foot. Minimum staking intervals will be 50-feet in tangent sections and 25-feet in curves. Stakes will also be placed at curve beginnings, ends, point of reverse curvature, point of compound curve, horizontal angle points and at changes of grade.

7-4 CONSTRUCTION REQUIREMENTS –

A. **Channels -** All fill areas in channels will receive suitable fill material to be compacted to a minimum of 90 percent relative compaction or more depending on proposed use after development. Suitable fill material will be determined by the Developer's geotechnical engineer. Unsuitable materials will be removed from the channel and replaced with suitable backfill material based on recommendations provided by the Developer's licensed geotechnical engineer.

B. **Storm Water Pollution Prevention Plan (SWPPP / Sediment and Erosion Control Measures) -** If required, a copy of the filed NOI and acceptable Storm Water Pollution Prevention Plan (SWPPP) with WDID number will be available on site at all times. Construction activities occurring between October 1st and April 30th will have erosion and sediment control measures in place, or capable of being placed within 24-hours. The Contractor will ensure that the construction site is prepared prior to the onset of any storm. Waterways under the jurisdiction of governmental agencies other than the City of Lincoln may be subject to additional erosion control measures or criteria, and this is the responsibility of the Developer and/or Contractor. The City of Lincoln erosion control provisions will include:

1. **Seeding and Soil Stabilization** -Where required, seeding and soil stabilization will be site-specific as shown on the approved project improvement plans and Storm Water Pollution Prevention plan NOI. The proposed mix and application rate will be submitted in writing to the City Engineer for approval. Where required, broadcast seed will be applied as follows:

Brando Brome	12 lbs/acre
Rose Clover	9 lbs/acre

Areas with sandy, dry soil will receive:

Zorro Annual Fescue	6 lbs/acre
Rose Clover	9 lbs/acre

A fertilizer consisting of 16-20-0 will be applied at a rate of 500 pounds per acre. If hydroseeding/mulching is used, seed quantities will be increased by 30 percent.

2. **Construction Water -** All construction water will be metered and paid for by the Developer or Contractor. The Contractor will obtain a hydrant meter permit from the City Support Services Department for the use of construction water.

   To obtain use of a City hydrant meter, contact the Support Services Department . All meters will be read by the Contractor, and the usage reading given monthly to the City Engineer or his/her delegated representative. Prior to project completion, the construction meter will be brought to the Support Services Department for a final reading and payment of all charges in full.

3. **Water Valve Operation -** After the water system has been tied-in to the City of Lincoln water system, only City of Lincoln Public Services Water Division personnel will operate water valves. The only exception is when the Contractor has obtained written permission from the City Engineer.

C. Pads - All pads will be compacted to a minimum of 90-percent relative compaction. Unsuitable materials will be removed from the pad areas per the recommendations of the Developer's licensed geotechnical engineer. The Developer will submit a letter from the Geotechnical Engineer stating that the grading was performed in substantial conformance with the geotechnical report (and subsequent updates}.

D. Retaining Walls

1. **Concrete/Masonry Walls -** All concrete masonry walls are to be installed in accordance with the manufactures and/or design Engineer's recommendations. (Refer to the Public Facilities Improvement Standards Details G-4 and G-4a).

2. **Wood Retaining Walls –** All wood retaining walls will be installed in accordance with the Public Facilities Improvement Standards Details G-1, G-2, and G-3.

E. Roadways

1. **Compaction -** Relative compaction of not less than 95-percent will be obtained for a minimum depth of 0.5-feet below the subgrade grading plane for the width between the outer edges of shoulders, including curb and gutter areas, whether in excavation, embankment or at original ground level. All other material will be compacted to a relative compaction of 90-percent, including subgrade prior to placement of aggregate base under sidewalk areas.

2. **Grade Control -** When the next layer to be placed on the subgrade is an asphalt concrete pavement, asphalt concrete base or asphalt concrete subbase, the subgrade grading plane at any point will not vary more than 0.05-foot above or below the grade established by the project surveyor.

3. **Stability Testing -** Subgrade will be stable. Proof rolling will be performed on the subgrade and aggregate base grade to assure stability. This will normally be tested with a heavy wheel load such as a full 4000-gallon water truck but will be at the

direction of the Project geotechnical engineer and approved by the City Engineer. There will be no movement of the aggregate base prior to paving. The geotechnical engineer will approve the stability and readiness for the next course of work.

4. **Unsuitable Materials -** Any unsuitable material encountered will be removed and replaced with a suitable backfill material. Suitable backfill materials and methods for placement are to be reviewed and approved by the on-site geotechnical engineer. Other methods for subgrade stability may be used upon review and approval of the Developer's geotechnical engineer.

F. **Grading around Trees and Protected Areas -** Grading activities within the protected zone of a Native Oak Tree or Landmark Tree will be conducted under the conditions set forth under the Grading Permit and Tree Permit Conditions. Preserve and/or protect any trees, plant materials, or areas specifically designated on the approved project improvement plans, or beyond the limits of clearing, grubbing, and grading activities. No filling, excavating, trenching, or stockpiling of materials will be permitted within the dripline of these trees or plant materials. To prevent soil compaction within the dripline area, no equipment will be permitted within this area. These conditions shalt also be met:

1. **Fencing -** A minimum 4-foot high orange barrier fence, or equal approved by the Community Development Department, will be installed at the outermost edge of the protected zone of each protected tree or group of trees. The fence will not be removed until written authorization is received from the Community Development Department. Fences must be installed in accordance with the approved fencing plan prior to the start of any grading operations. The Contractor will call the Community Development Department for an inspection of the fencing prior to grading operations. Signs must be installed on the fence in four locations, equidistant around the tree. On fencing around a grove of trees, the signs will be placed at approximately 50-foot intervals. Sign verbiage is indicated in Section 7-5.

2. **Grade Changes -** No grade changes are permitted which cause water to drain to within twice the longest radius of the protected zone of any protected tree, tree group, or plant materials.

3. **Native Ground Surface Fabric -** Removal of any native ground surface fabric from the protected zone of the tree shalt require protection of the tree within 48-hours of removal.

4. **Preservation Devices -** Preservation devices (such as aeration systems, oak tree wells, drains, special paving and cabling systems) will be installed as shown on the approved project improvement plans and certified by the Developer's arborist. A copy of the certification will be provided to the City Engineer.

5. **Retaining Walls -** The Contractor will provide immediate protection against moisture lost to exposed roots due to construction of a retaining wall within the protected zone of the tree. The retaining wall will be constructed within 72-hours after completion of grading in the protected zone

6. **Roots -**

   a. **Minor Roots -** Minor roots (less than 1-inch in diameter) may be cut. Damaged roots will be traced back and cleanly cut behind any split, cracked or damaged area.

   b. **Major Roots -** Major roots (over 1-inch in diameter) will not be cut without written approval and supervision of the Developer's arborist. The written approval and report will be submitted to the City Engineer.

7. **Trenching -** Trenching within the protected zone of a tree, group of trees, or plant materials, when permitted, will only be conducted with hand tools, to avoid root damage. The Contractor will follow provisions approved in the Utility Trenching Pathway Plan, submitted by the Developer to the Community Development Department.

7-5 MATERIALS

A. Dust Palliative – Prior to using any chemical additives for dust control, or for the use of any dust palliative, written approval from the City Engineer through the submittal process will be obtained. The City Engineer will consider only products whose performance has been certified by the California Air Resources Board for approval. (Refer to Caltrans Standard Specifications Sections 17 and 18 for additional information).

B. Retaining Walls

1. **Concrete/Masonry Walls -** All concrete or masonry wall materials will conform to the materials and specifications provided by the wall manufacturer or design engineer and as detailed on the approved project improvement plans.

2. **Wood Retaining Walls -** All wood retaining wall materials will conform to Standard Detail G-2.

C. Tree Fencing

1. **Signs –** The size of each sign will be a minimum of 2-feet by 2-feet and will contain this language:

WARNING
THIS FENCE WILL NOT BE REMOVED
OR RELOCATED WITHOUT WRITTEN
AUTHORIZATION FROM THE
COMMUNITY DEVELOPMENT DEPARTMENT

GRADING DETAILS

Interior Property Line Grading *G-1*
Wood Retaining Wall *G-2*
Exterior Perimeter Property Line Grading and Walls *G-3*
Exterior Perimeter Property Line Grading *G-3A*
Masonry or Concrete Retaining Wall *G-4*
Masonry or Concrete Retaining Wall *G-4A*

[THIS PAGE INTENTIONALLY LEFT BLANK]

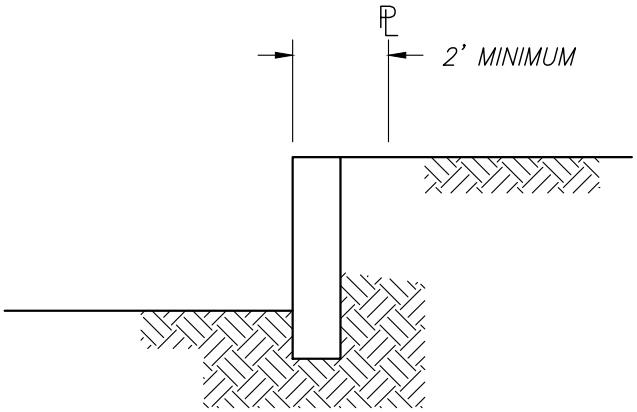

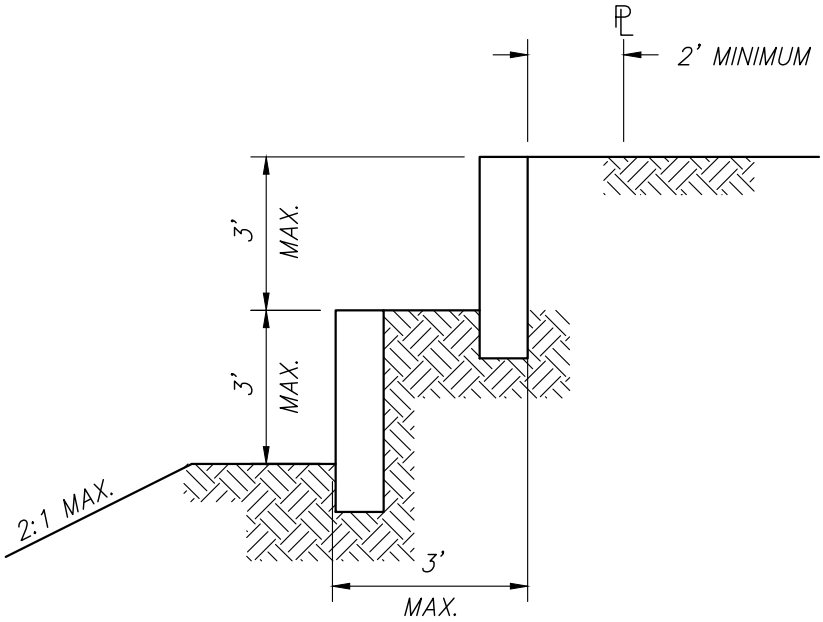

RETAINING WALLS

NOTES:

1. *NO DOUBLE RETAINING WALLS TO BE CONSTRUCTED ON SIDE YARDS FOR LOTS TO BE IN CONFORMANCE TO F.H.A. STANDARDS.*

2. *FOOTING DESIGN BY STRUCTURAL ENGINEER AND SHALL NOT ENCROACH ON PROPERTY LINE.*

CITY OF LINCOLN
ENGINEERING DEPARTMENT

INTERIOR PROPERTY LINE GRADING

REVISIONS:	DATES:	APPROVED:
		CITY ENGINEER DATE

SCALE: NONE
DATE: SEPTEMBER 2019
DRAWN BY: C.G.

G-1

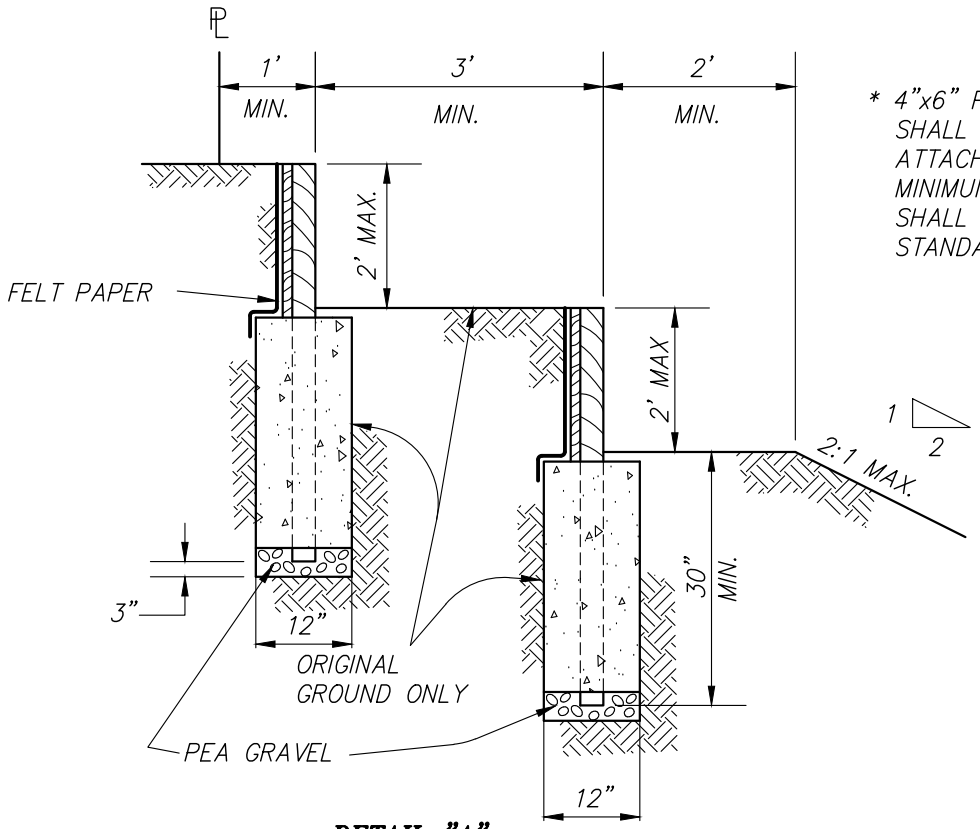

DETAIL "A"

* 4"x6" POSTS AT 4' CENTERS SHALL BE USED WHEN FENCES ARE ATTACHED TO RETAINING WALLS; MINIMUM EMBEDMENT FOR POSTS SHALL BE 3.0'x18"ø – MEET U.B.C. STANDARDS.

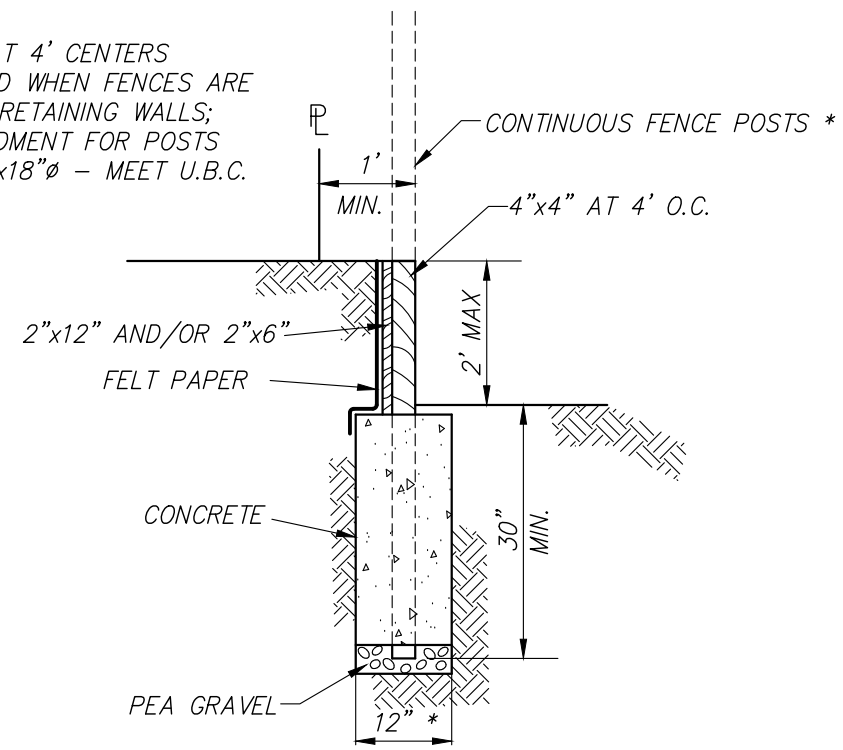

DETAIL "B"

NOTES:

1. ALL MATERIAL FOR WOODEN WALLS SHALL BE REDWOOD OR PRESSURE TREATED DOUGLAS FIR.
2. ALL WOODEN MATERIALS SHALL BE GRADE NO. 2 OR BETTER WITH NO OPEN GRAIN MATERIAL ALLOWED.
3. WOODEN WALLS SHALL NOT BE USED ADJACENT TO STREET RIGHT-OF-WAYS.
4. CONCRETE, CONCRETE BLOCK AND OTHER WALL DETAILS SHALL BE SUBMITTED TO THE CITY ENGINEER FOR APPROVAL.
5. A BUILDING PERMIT SHALL BE OBTAINED FOR ALL RETAINING WALLS.
6. A BUILDING PERMIT SHALL BE OBTAINED FOR ALL TERRACED WALLS.
7. REINFORCED CONCRETE OR MASONRY WALLS ARE REQUIRED IF EXISTING STRUCTURES ARE LOCATED LESS THAN 10' FROM THE HIGHER WALL (DETAIL "A").

CITY OF LINCOLN
ENGINEERING DEPARTMENT

WOOD RETAINING WALL

REVISIONS:	DATES:	APPROVED:
		CITY ENGINEER DATE

SCALE: NONE
DATE: SEPTEMBER 2019
DRAWN BY: C.G.

G-2

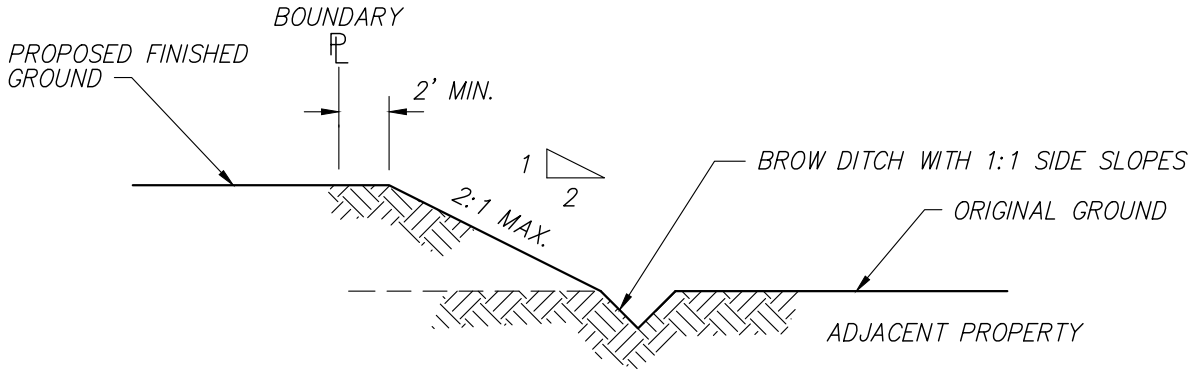

MOST DESIRABLE
ALTERNATE "A"

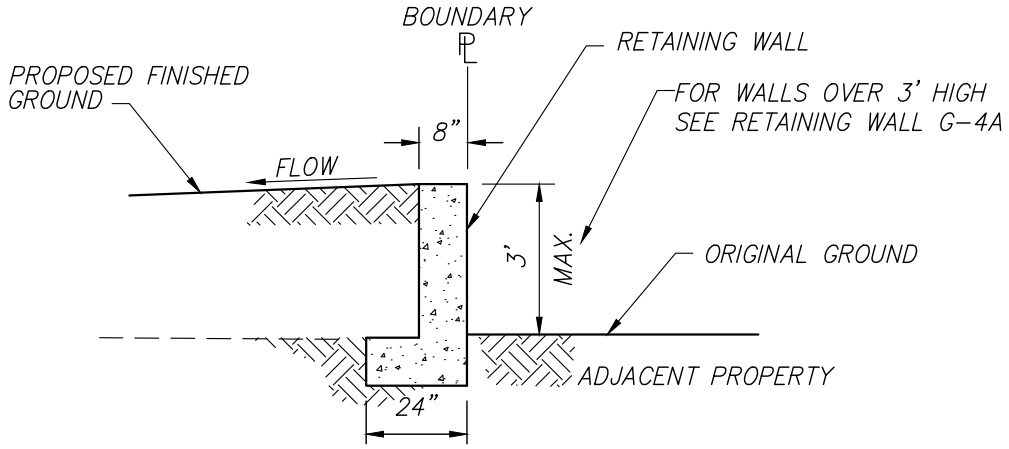

ALTERNATE "B"

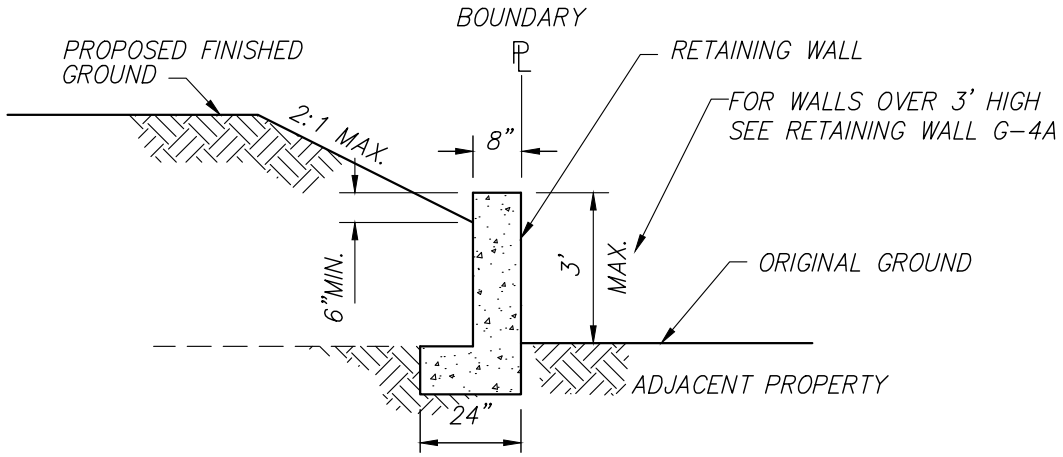

ALTERNATE "C"

NOTES:

1. SEE G-3A FOR CUTS ADJACENT TO EXTERIOR PERIMETER PROPERTY LINES.
2. ALTERNATE "A" REQUIRES CONSTRUCTION EASEMENT FROM ADJACENT PROPERTY OWNER.
3. RIGHT OF ENTRY FROM ADJACENT PROPERTY OWNER IS REQUIRED FOR ALTERNATES "B" & "C".
4. BROW DITCH TO BE SIZED BY HYDROLOGY CALCULATIONS.

CITY OF LINCOLN
ENGINEERING DEPARTMENT

EXTERIOR PERIMETER PROPERTY LINE GRADING & WALLS

REVISIONS:	DATES:	APPROVED:
		CITY ENGINEER DATE

SCALE: NONE
DATE: SEPTEMBER 2019
DRAWN BY: C.G.

G-3

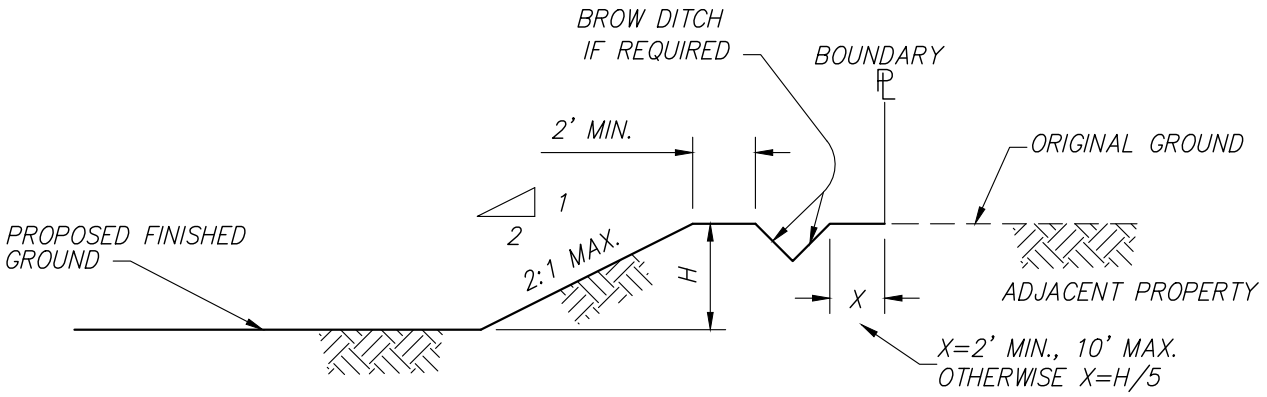

NOTES:

1. IF BROW DITCH IS NOT REQUIRED, X=2' MIN. FROM THE TOP OF THE SLOPE.
2. IF REQUIRED BY CITY ENGINEER.

CUT AREAS
(OPTIONAL)

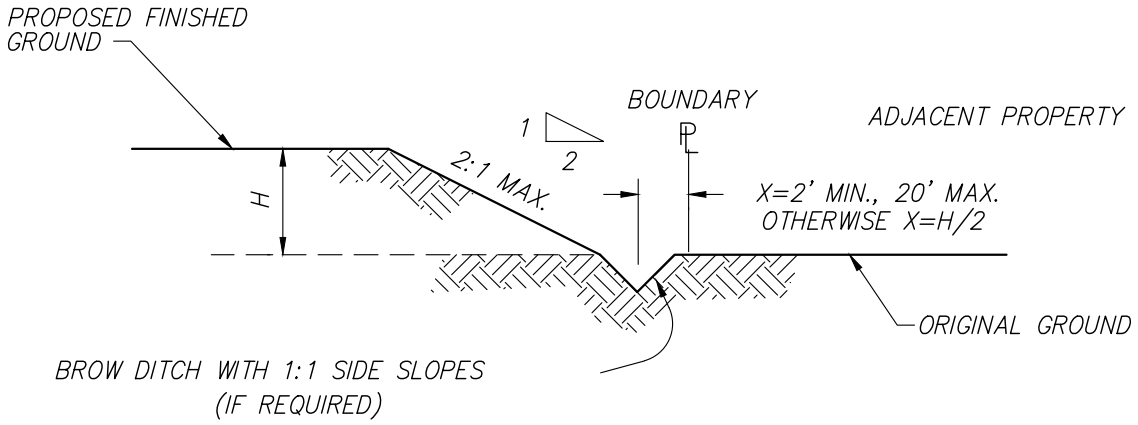

FILL AREAS

ALTERNATE "D"

NOTES:

1. BROW DITCH TO BE SIZED BY HYDROLOGY CALCULATIONS.

CITY OF LINCOLN
ENGINEERING DEPARTMENT

EXTERIOR PERIMETER PROPERTY LINE GRADING

REVISIONS:	DATES:	APPROVED:
		CITY ENGINEER DATE

SCALE: NONE
DATE: SEPTEMBER 2019
DRAWN BY: C.G.

G-3A

DESIGN NOTES:

1. THE DESIGN REQUIRES A NON-SATURATED BACKFILL. SURFACE AND SUBSURFACE DRAINAGE CONTROL IS REQUIRED TO PREVENT SATURATION OF THE BACKFILL, OR TO RELIEVE HYDROSTATIC PRESSURES. DRAINAGE CONTROL SHALL BE AS SPECIFIED IN THE CONSTRUCTION DRAWINGS, PROJECT PLANS OR AS DIRECTED BY THE ENGINEER.

2. THE DESIGN IS BASED ON THE FOLLOWING ASSUMPTIONS:
   - A. ALLOWABLE SOIL BEARING 2500 PSF
   - B. EQUIVALENT FLUID WEIGHT 35 PCF
   - C. SOIL FRICTION FACTOR 0.3
   - D. SURCHARGE OVER HEEL 250 PSF
   - E. SOIL DENSITY 125 PCF
   - F. LEVEL BACKFILL

   THESE ASSUMPTIONS SHOULD BE VERIFIED BY THE PROJECT GEOTECHNICAL ENGINEER PRIOR TO CONSTRUCTION.

CONSTRUCTION NOTES:

1. CONCRETE SHALL HAVE A MINIMUM COMPRESSIVE STRENGTH OF 3,000 psi IN 28 DAYS.
2. REINFORCING STEEL SHALL BE GRADE 60.
3. THE BACK OF WALL SHALL BE SPRAYED WITH A WATER SEAL COMPOUND.
4. LAP ALL HORIZONTAL STEEL AT LEAST 40 BAR DIAMETERS AT SPLICES.
5. USE CONCRETE MASONRY BLOCK TYPE N PER ASTM C-90.
6. MORTAR SHALL BE TYPE S OR M AND SHALL CONFORM TO ASTM C 270.
7. GROUT SHALL BE A 6 SACK MIX AND SHALL CONFORM TO ASTM C 476.
8. FULLY GROUT (SOLID) ALL CELLS AND CONSOLIDATE PER 1996 U.B.C.
9. f'm = 2,500 psi. NO SPECIAL INSPECTION IS REQUIRED.
10. THE FOUNDATION SOIL SHALL BE FIRM AND COMPACTED TO 95% OF MAXIMUM DRY DENSITY, AS DETERMINED BY ASTM D-1557.
11. COMPACTION WITHIN 3 FEET OF THE BACK FACE OF THE WALL SHALL BE ACHIEVED BY LIGHTWEIGHT MECHANICAL TAMPERS, ROLLERS, OR VIBRATORY SYSTEM ONLY.
12. NO BACKFILL SHALL BE PLACED AGAINST THE WALL UNTIL THE CONCRETE OR GROUT HAS REACHED THE DESIGN STRENGTH.
13. OMIT MORTAR FROM VERTICAL JOINT IN FIRST COURSE ABOVE PROPOSED GROUND LINE AT 32" CENTERS FOR WEEP HOLES. FILL ALL CELLS WITH GROUT.
14. SEE DETAIL G-4A

TABLE OF REINFORCING STEEEL, DIMESNONS AND DATA

DESIGN H	3'-4"	4'-0"	4'-8"	5'-4"	6'-0"
W	3'-8"	4'-1"	4'8"	5'-3"	6'-9"
F	1'-0"	1'-1"	1'-2"	1'-3"	1'-4"
@ BARS	NONE	NONE	NONE	#5 @ 16"	#5 @ 16"
@ BARS	NONE	NONE	NONE	#5 @ 16"	#5 @ 16"

CITY OF LINCOLN
ENGINEERING DEPARTMENT

MASONRY OR CONCRETE RETAINING WALL

REVISIONS:	DATES:	APPROVED:
		CITY ENGINEER DATE

SCALE: NONE
DATE: SEPTEMBER 2019
DRAWN BY: C.G.

G-4

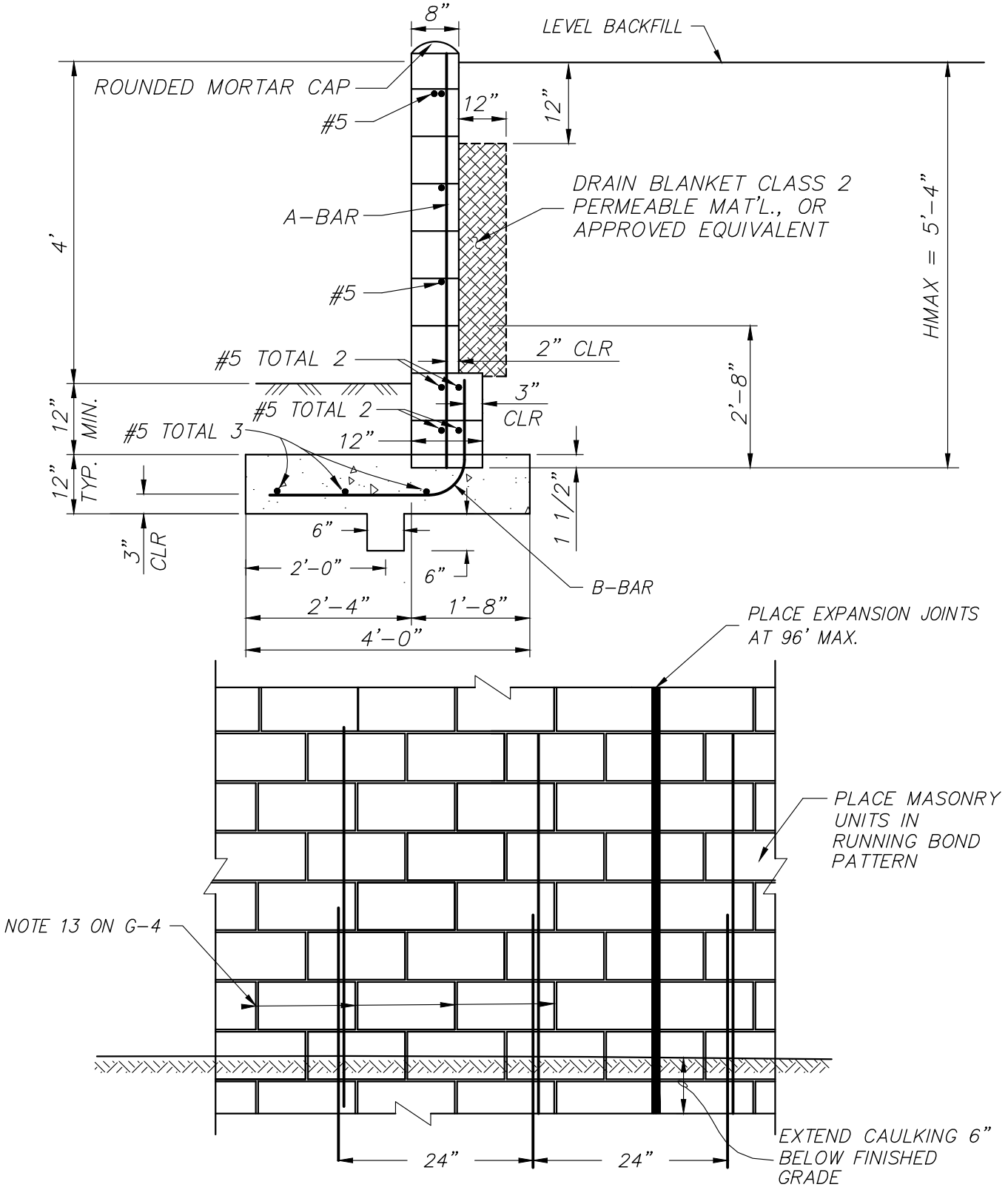

RETAINING WALL DETAIL

CITY OF LINCOLN
ENGINEERING DEPARTMENT

NOTES:

1. REFER TO CALTRANS STD. DWG. B3-7B, TYPE 6A WALL.

MASONRY OR CONCRETE RETAINING WALL

REVISIONS:	DATES:	APPROVED:
		CITY ENGINEER DATE

SCALE: NONE
DATE: SEPTEMBER 2019
DRAWN BY: C.G.

G-4A

SECTION 8

LANDSCAPING & IRRIGATION (LSC)

8-1 General LSC-1
8-2 Preservation of Property LSC-2
8-3 Personnel LSC-2
8-4 Weather LSC-2
8-5 Irrigation Installation LSC-2
A. Trenching LSC-2
B. Backfill LSC-3
C. Control Wiring LSC-3
D. Irrigation Controller LSC-4
E. Central Control Specifications LSC-4
1. Conduits LSC-4
2. Conductors LSC-4
3. Satellite Assembly LSC-5
F. PVC/Brass Pipe LSC-5
G. Sprinkler Heads LSC-6
H. Valves LSC-7
I. Valve Boxes LSC-7
J. Water Service and Meter LSC-7
8-6 Irrigation Testing LSC-7
A. Service Lines and Irrigation Main LSC-7
B. Leak Repair LSC-8
C. Electrical System LSC-8
8-7 Planting Installation LSC-8
A. Soil Preparation LSC-8
B. Soil Conditioning LSC-8
C. Fine Grading LSC-8
D. Tree, Shrub and Ground Cover Planting LSC-9
1. Locations LSC-9
2. Pit Digging LSC-9
3. Root Balls LSC-9
4. Planting plants LSC-9
5. Planting trees LSC-9
6. Fertilizers & Herbicides LSC-10
7. Supporting trees LSC-10
E. Seeding LSC-10
1. Preparation LSC-10
2. Application LSC-10
3. Protection LSC-10
F. Sod Planting LSC-10
1. Application LSC-10
2. Rolling LSC-11
3. Maintenance LSC-11
8-8 Irrigation Materials LSC-11
A. Approved Equal LSC-11
1. Product LSC-11

2. Contact LSC-11
3. Reference LSC-11
B. Unapproved Materials LSC-11
C. Backflow Prevention Device LSC-11
D. Electrical LSC-11
1. Control Wire LSC-11
2. Pull Box Covers LSC-12
3. Service Unit and Meter Socket LSC-12
4. PVC Conduit LSC-12
E. Irrigation Controller LSC-12
F. Pipes and Fittings LSC-13
1. Mains LSC-13
2. Service Laterals LSC-14
G. PVC Pipe Cements LSC-14
1. Primer LSC-14
2. Cement LSC-14
H. Sprinkler Heads LSC-14
I. Sprinkler Risers LSC-14
J. Valves and Valve Boxes LSC-14
1. Remote Control Valves LSC-14
2. Gate Valves LSC-15
3. Quick Coupling Valves LSC-15
4. Valve Boxes LSC-15
8-9 Planting Material LSC-15
A. Backfill LSC-15
B. Fertilizer LSC-15
1. Turf and Planting Areas LSC-15
2. Planting Holes LSC-15
C. Herbicide LSC-15
D. Imported Topsoil LSC-16
E. Mulch LSC-16
F. Plant Stock and Ground Cover LSC-16
G. Seed LSC-17
H. Soil Amendment LSC-17
I. Tree Stakes and Ties LSC-17
1. Tree Stakes LSC-17
2. Tree Ties LSC-17
3. Earth Anchors LSC-17
8-10 Maintenance Period LSC-18
A. Preliminary Inspection LSC-18
B. Maintenance Period LSC-18
C. Overall Maintenance Requirements LSC-18
D. Watering LSC-18
E. Lawn Maintenance LSC-18
F. Plants LSC-19
G. Weeding and Grading LSC-19
8-11 Cleaning Up LSC-19
8-12 Final Inspection and Acceptance LSC-19
A. Timing LSC-19
B. Review LSC-19
C. Corrective Work LSC-19

1. Turf LSC-19
2. Plants LSC-19
3. Irrigation LSC-19
D. Final Acceptance LSC-19
8-13 Guarantee LSC-20
A. Plants LSC-20
B. Irrigation LSC-20
8-14 Landscape and Irrigation Details LSC-21

[THIS PAGE INTENTIONALLY LEFT BLANK]

SECTION 8

LANDSCAPING & IRRIGATION (LSC)

8-1 **GENERAL -** All improvements within the City of Lincoln will be approved and permitted by the City, and will conform to the City of Lincoln Design Criteria & Procedures Manual. Landscaping and irrigation improvements will be installed as recommended by the material manufacturer and in strict accord with:

1. Approved project improvement plans
2. City of Lincoln Public Facilities Improvement Standards
3. CA Title 23, Division 2, Chapter 2.7, Model Water Efficient Landscape Ordinance
4. Caltrans Standard Specifications, latest edition

Should conflicts arise between documents, the approved project improvement plans will govern over these Public Facilities Improvement Standards. These Public Facilities Improvement Standards will govern over the Caltrans Standard Specifications. In the event of conflict between applicable documents and/or plans, the most restrictive will prevail. In the event that the requirements of this section conflicts with required storm water quality treatment, the storm water quality requirements will take precedence.

The manufacturer's guidelines for all materials to be used on the project will be present on the construction site at all times.

The Project will comply with all applicable City, County, State, and Federal laws and regulations relating to construction of the improvements as required, including the State of California Model Water Efficient Landscape Ordinance (MWELO).

If the City Engineer determines that any work on private or public property constitutes a hazard to the health, safety, or welfare of the public; endangers property; adversely affects the safety, use or stability of adjacent property; an overhead or underground utility, or a public way, watercourse or drainage channel; or could adversely affect the air quality; or the water quality of any water bodies or water courses; the City Engineer may issue a stop work notice to the owner of the property upon which the condition is located, or other person or agent in control of such property. Upon receipt of such stop work notice, the recipient will, within the period specified therein, stop all work, obtain any necessary permits and plans or other reports, detailed construction recommendations, studies, or other engineering data prior to and about any corrective or proposed work or activity.

All improvements within the City of Lincoln will be performed by a contractor licensed in accordance with the California Contractors State License Law, Business and Professions Code Section 7000 et seq.

All persons, firms, partnerships, or corporations doing business of any nature in the City of Lincoln will have a current Business License as stated in Chapter 5.04-License Tax, City of Lincoln Municipal Code. This includes developers, engineers, and contractors.

Refer to the City of Lincoln's Design Criteria & Procedures Manual for design information. All projects will follow the State water quality requirements for erosion and sedimentation control always.

8-2 **PRESERVATION OF PROPERTY -** The planting and irrigation operations will be conducted in such a manner that no damage will result to existing site improvements and plantings. The Contractor will be responsible for any damage resulting from these operations, and will repair or replace such damage at his own expense. Vehicles of any kind will not be allowed to pass over curbs, sidewalks, planting areas, etc., unless proper protection is provided.

8-3 **PERSONNEL -** Planting and seeding operations will be performed by a C-27 licensed contractor. Contractor will conduct planting and seeding operations under the supervision of a landscape technician that has been certified by the California Landscape Contractor Association.

8-4 **WEATHER -** No planting will occur during weather conditions which will adversely affect materials, or when soil is in a muddy condition.

8-5 **IRRIGATION INSTALLATION -** The plans indicate the general arrangement of piping and equipment, and do not necessarily indicate all offsets, fittings and accessories that may be required. The Contractor will furnish incidental materials and labor required to complete the work.

A. Trenching

1. Excavation will be open vertical construction sufficiently wide to provide free working space around the work to be installed and to provide ample space for backfilling and compacting. Trenches for pipe will be cut to required grade-lines, and the trench bottom will be compacted to provide an accurate grade and uniform bearing for the full length of the line. When two pipes are to be placed in the same trench, 6-inches of separation will be required between pipes and/or conduits. (Refer to the Public Facilities Improvement Standards Details LSC-6 and LSC-7)

2. The excavation required for the installation of conduit, foundations and other appurtenances will be performed in such a manner as to cause the least possible injury to the streets, sidewalks and other adjacent improvements. All landscape or other improvements disturbed in excavating will be replaced or reconstructed.

The material from the excavation will be placed in a position that will not cause damage or obstruction to vehicular and pedestrian traffic, nor interfere with surface drainage.

3. The minimum cover requirements above the conduit or wiring are:

a. 12- inches over non-pressure, lateral lines
b. 18- Inches over pressurized main lines.
c. 24- Inches over pipe crossing underneath pavement.

B. Backfill - Backfill material will consist of Class D requirements per these standards. Backfill will be free from lumps or stones and placed in 6-inch layers that are thoroughly compacted by mechanical tamping. Backfill will be compacted to 90% relative compaction outside of paving areas and 95% relative compaction within paving areas.

C. Control Wiring

1. Connections between the automatic controllers and the electric control valves will be made with direct burial copper wire AWG- U.F. 600 volt. Two spare wires of different colors will be run from the valve furthest from the controller, back to the controller. Pilot wires will be of a different color for each automatic controller.

2. The valve manufacturer's recommendations and wire chart. Wire size will be no less than #14.

3. Wiring will occupy the same trench as pressure supply or lateral lines. The wiring will be the same elevation as the supply or lateral lines, being neither above nor below these lines.

4. When more than one wire is placed in a trench, the wiring will be taped together at intervals of 4-feet to 6-feet.

5. Wires installed in conduits will not be taped together to facilitate replacement of individual wires.

6. An expansion curl should be provided within 3-feet of each wire connection and at least every 100-feet of wire length. Expansion curls will be formed by wrapping at least five tums of wire around a one-inch diameter pipe, then withdrawing the pipe.

7. Field splices between the automatic controller and electric control valves will not be allowed without the approval of the Director of Public Services or his/her designee.

8. There will be no twinned valves; all Remote Control Valves (RCV's) will be wired to an individual station on the controller.

D. **Irrigation Controller -** All controller locations are diagrammatic only. Placement of the controllers will be coordinated with the Director of Public Services or his/her designee. The controller will be a Rainmaster DX Series. Specific model to be approved by the Director of Public Services or his/her designee All local and applicable codes will apply in installing the 120-volt electrical service to the controller. The Contractor will provide the electrical service connections from the power service point to the controller. Adequate coverage and protection of the 24-volt service wire leading from the controller will be maintained from the bottom of the controller.

E. **Central Control Specifications -** The Contractor will coordinate with the telephone company for connections to the service and/or installation of conduits, telephone conductors, jacks and modems at the locations shown on the plans.

1. **Conduits -** Interconnect conduit and fittings will be PVC schedule 40. The interconnect conduit will be located within the public right-of-way whenever possible. If the conduit is installed outside of the public right-of-way, an easement will be provided to the City prior to installation.

   Conduit runs will be installed as shown in the approved plans. Any changes will be approved by the City Engineer prior to installation.

   The ends of the conduits, whether shop or field cut, will be reamed to remove burrs and rough edges. Cuts will be made square and true.

   Conduit bends, except factory bends, will have radii of not less than six times the inside diameter of the conduit.

   Conduit will be installed at a depth of not less than 18-inches below finished grade.

   Conduit will be free of soil and debris.

   A nylon or polypropylene pull rope with a minimum tensile strength of 500- pounds will be installed in all conduits, which are to receive future, interconnect cable. At least 2-feet of pull rope will be extended beyond each end of the conduit run and secured.

2. **Conductors -** The communication cable as required from the sub master satellite assembly to the other satellite assemblies on line will be a 4-conductor shielded cable.

   Communication cable may be used to link satellites up to 5,000-feet from each other.

   The flow sensor wire as required from the flow sensor into the satellite assembly enclosure will be a 2-conductor shielded cable.

The sensor cable may be used to connect the flow sensor to a satellite up to 2,000-feet from each other.

All interconnect conductors will be pulled by hand. A total of 3- feet of cable will be left at each satellite assembly and pull box. Sufficient slack will be left to allow the wire to extend 18- inches above the top of the pull box grade.

The interconnect wire will be continuous from satellite to satellite. All splices will occur within the satellite enclosure unless specifically authorized by the Director of Public Services or his/her designee. Splices will be capable of satisfactory operation under continuous submersion in the water.

3. **Satellite Assembly -** All satellites will be pre-assembled by the supplier in a stainless steel, weather proof, and vandal resistant, lockable enclosure. The satellite assembly will consists of a removable backboard, interconnect terminal strips, primary power voltage surge arrester, on/off switch, a ground fault interrupt circuit, ground rod, wire, and clamp.

   The satellite assembly will include a phone communication circuit board for communicating with the central computer by means of the telephone system.

   The satellite assembly will include a radio communication circuit board for communicating with the central computer by means of data radio.

   The satellite assembly will include a hard wire communication circuit board for communicating with a sub master satellite assembly when interconnected by means of hard wire.

   The satellite assembly will include a radio and dome antenna assembly for line of sight communication or a radio and high gain antennae assembly for non-line of sight.

   The satellite assembly (where applicable will include a flow sensing assembly with normally open master valve assembly option for each point of connection (maximum of two per satellite/group) or a Dual Flow Sensing Assembly with Master Valves option for a single point of connection with a bypass to monitor very low and high flows.

   The satellite assembly (where applicable) will include a transmitter and built-in remote receiver with a controller access code built-in receiver only with controller access code whichever is applicable.

   The satellite assembly will be covered by a five-year limited warranty.

F. PVC/Brass Pipe

1. PVC pipe will be cut with a fine-toothed hacksaw or approved cutting tool and any burrs will be removed. The outside of the pipe and the inside surface of the fittings

will be wiped with a clean cloth and then primed to remove all dirt and moisture prior to applying cement solutions.

2. The cement solution will be applied to the pipe and fitting socket with a brush having a width approximately one-half the diameter of the pipe. The cement solution will be applied freely with a light wiping action to spread the cement uniformly over the surfaces. The pipe surface or fitting socket will not be rubbed with a brush any more than is necessary to spread the cement.

3. Immediately after the cement has been applied to the surface to be joined, the pipe will be inserted into the fitting with a twisting motion to the full depth of the fitting socket. Immediately after joining is completed, excess cement will be thoroughly wiped form the pipe and fitting. The joined members will be allowed to cure for at least 5-minutes before they are handled. In cold or damp weather, the curing period will be increased due to slower evaporation of the solvent. An additional fitting or pipe section may be added to the completed joint within 3-minutes if care is exercised in handling so that a strain is not placed on the previous joint.

4. Except as shown on the approved plans, PVC pipe will be laid in a level trench on compacted or undisturbed earth and solvent-weld pipe will be placed from side to side in the trench at intervals of approximately 50-feet. Pipe will be held down between joints with small mounds of earth to prevent movement.

5. Pressure test of mainline will be made with all RCV's installed and under pressure. After completion of pressure tests on the pipelines, the trench will be immediately backfilled, covering the pipe with soft earth to prevent damage from rocks.

6. Brass pipe joints will be threaded couplings, rated at 150-psi. Threaded joints will be made by placing Teflon tape on the male threads only. Use of thread cement or caulking to make the joints tight is not permitted. All cut ends will be reamed to full pipe bore before assembly. Brass pipe fittings will be joined to the pipe in the same manner as specified for pipe joints.

7. All main lines to have a jacketed copper trace wire installed, running the entire length of the main.

8. All taps on main lines 3-inches or larger will be made with saddle taps.

9. All piping will be sleeved under paving.

G. **Sprinkler Heads -** Nozzles on stationary sprinklers will be tightened after installation and sprinklers having an adjustment stem will be adjusted on a lateral line for proper radius, diameter and gallon. They will be set perpendicular to finished grade and will be installed as indicated on the approved plans and as shown in these Improvement Standard Details.

A coverage test shall be performed in the presence of the City Inspector after the Contractor has made all adjustments to the irrigation system. No hydroseeding or planting shall occur until the City Inspector has determined the water coverage for planting areas is complete and adequate.

H. Valves - Remote control valves will be adjusted so the most remote sprinkler heads operate at the pressure recommended by the head manufacturer and so a uniform distribution of water is applied by the sprinkler heads to the planting areas for each individual valve system. Each valve assembly will have its own outlet; multiple assemblies are not allowed. All valves will be installed as indicated on the approved plans and as shown in these Improvement Standard Details.

I. Valve Boxes

1. All remote-control valves, gate valves, manual angle or globe valves will be installed in a plastic valve box as shown in the Construction Standard Details, complete with cover, unless otherwise specified on the approved plans. All plastic valve boxes will be Brooks, Ametek, Carson, each with locking lids, or approved equal.

2. All valve boxes will be set ¼-inch above finish grade in lawn areas and 2-inches above finish grade in ground cover areas. Valve boxes in athletic field areas will be set 12-inches below grade with a 3M Marking Ball, or approved equal.

3. Valve boxes located near walks, curbs, header boards or paving will be installed in such a way as to allow for valve boxes to abut those items with top surface matching planes.

4. All valve boxes will be blocked for support with brick or concrete block.

5. Valve boxes will be heat branded with 2” characters.

J. Water Service and Meter - The water service and meter will be installed in accordance with Improvement Standard Details.

8-6 IRRIGATION TESTING

A. Service Lines and Irrigation Main - Upon completion of the main line distribution system, lateral lines and installation of the electric control valves, the system will be flushed and then capped. After notifying the City Engineer 72-hours in advance, the system will be pressure tested by applying a continuous static water pressure and will meet the these conditions:

1. Main lines to hold 150-psi for four hours.

2. Lateral lines to hold line pressure for four hours.

B. Leak Repair - Repair any leaks resulting from the pressure tests. Pressure testing will continue until no leakage or loss of pressure is shown over the entire prescribed test period. At the conclusion of the pressure tests, the heads will be installed and tested for operation in accordance with design requirements under normal operating pressures.

C. Electrical System - Prior to the acceptance of the improvements, the Contractor will pass the following tests to the electrical system:

1. Continuity of each circuit
2. Grounds in each circuit
3. A megger test on each circuit
4. A functional test in which it is demonstrated that each and every part of the system functions as specified or intended herein.

8-7 PLANTING INSTALLATION

A. Soil Preparation - Prior to any planting bed preparation or planting, finish grade all planting areas, fill as needed or remove surplus dirt and float areas to a smooth, uniform grade as indicated on the approved Grading Plans. Slope all planting areas to drain. Roll, scarify, rake and level as necessary to obtain true, even planting surfaces. Finish grades will be approved by the Public Services Director or his/her designee before planting is started. All planting areas will be thoroughly wet down and sprinkler emitter coverage and operation confirmed. Allow soils to dry so as to be workable after which, thoroughly cultivate to a depth of 12-inches and allow to dry out.

B. Soil Conditioning - Soil amendment and fertilizers will be spread evenly over all areas as specified below:

1. Fertilizer - Per soils fertility analysis.

2. Soil Amendment- Per soils fertility analysis. Soil amendments and fertilizers are to be incorporated into the top 12-inches of soil by repeated rotary-hoe cultivation.

C. Fine Grading

1. Grades will require uniform levels or slopes between points where elevations are given, or between established walks, curbs, paving or other fixed structural elements. Planting areas, including lawns, will be true to grade within one inch tested in any direction with a 10-foot straightedge. Finish grades will be smooth, even plane with no abrupt change of surface. Tops and toes of slopes will be rounded to produce gradual transitions.

2. Finished grades of all shrubs, annuals and ground cover areas will be 1-inch below top of adjacent structural elements.

Subgrades of lawn areas will be ½-inch below top of adjacent structural elements. All grades to provide for gravity, surface runoff of water. Low pockets are not allowed.

D. Tree, Shrub and Ground Cover Planting

1. **Locations -**Tree and shrub locations are to be marked on-site using survey stakes, paint marks, or other approved methods. Locations will be approved by the Director of Public Services or his/her designee prior to plant holes being dug. In addition, special consideration shall be given to street tree locations at intersections, as follows:
    i. No street trees within 25 ft of street lights on arterial, collector or commercial streets.
    ii. No street trees within 15 ft of street name, stop or yield signs at curb returns and intersections on residential streets.
    iii. Distance shall be measured from center of trunk to center of sign post or street light pole.

2. **Pit Digging -** Dig circular pits, 3 times the diameter of the planting can.

3. **Root Balls -** Plants are to be lifted so that the root ball is supported from the underside. Plants that do not have a satisfactory root system will be rejected. If plants do not have young feeder roots showing at the edge of the container, loosen their roots and cut in several places to encourage new feeder root development along the perimeter of the root ball. Root balls are to be checked for girdling roots around the stems.

4. **Planting plants -** All plants will be planted immediately after the containers are cut and containers will be immediately removed from the site. Ground cover will be installed at spacing's indicated on the approved plans and will be evenly spaced and staggered in rows. Place each plant in a pit so the root system lies free without doubling and so the roots are planted vertically. Firm the soil around each plant and sprinkle the area immediately to avoid drying out.

5. **Planting trees -** Place plants in the pits in an upright position and place approved fertilizer tablets. Backfill until the hole is one-half full, thoroughly water, then complete backfilling. Place a 4-inch high berm outside the excavated area, and fill the watering basin with water. Trees will be planted on a packed mound, 2-inches above grade at the time of planting. The crown on the plant after settlement will be 1-inch above finish grades for shrubs and 3-inches above finished grades for trees. Basins are not required if plants are in a lawn area or are watered by an emitter system. Mulch is not to be placed within the basin areas, or within 6- inches of the stems for areas without basins.

6. **Fertilizers & Herbicides -** Apply fertilizer consisting of a mixture of 16% nitrogen, 6% phosphorous, 8% potassium (16-6-8) at a rate of 5-pounds per 1,000-square feet uniformly over area to receive ground cover. Pre-emergent herbicide will be applied to all shrub and ground cover areas, including plant basins, prior to any required mulching.

7. **Supporting trees -** After pruning (only suckers are to be pruned, no pruning on-stem of the tree, up to the primary branches) place stakes along the side of the root ball and two feet into undisturbed soil. Trees are to be tied to the stakes per Improvement Standard Details. No mulch is to be placed within the tree basin, or within 6- inches of the stem if a basin is not required. Specimen trees will be guyed as specified in Improvement Standard Details. Specimen trees planted in parks or areas subject to pedestrian traffic will receive a 24-inch long by ½-inch diameter white PVC pipe on each guy wire for visibility.

E. Seeding

1. **Preparation -** Installation of all plants and ground cover will have been completed prior to seeding operations. Just prior to sowing, areas to be seeded will be made sufficiently loose and friable to receive the seed.

2. **Application -** Seed will be sowed evenly using a mechanical spreader at the rate specified on the approved plans. One-half the seed will be sowed in one direction, and the remaining one-half sowed in a direction 90-degrees to the first during a windless period. Turf seed will be applied with an implant seeder that implants the seed into the soil. Broadcast seeding is not allowed for turf seed. Apply fertilizer (16-6-8) at a rate of 5-pounds per 1,000-square feet uniformly over seeded areas. Lightly rake surface to cover seed and to mix with fertilizer and then compact with a 200- pound roller. Soil will be kept moist but not saturated until the seed has generated.

3. **Protection -** Protect grass areas with temporary fencing as necessary. Barriers will be maintained by the Contractor and kept in orderly condition at all times until work has been accepted by the City. Any damage to turf will be repaired at the expense of the Contractor.

F. Sod Planting – Contractor will notify the City Engineer and the Director of Public Services at minimum, 10 days prior to placement. The City reserves the right to inspect and approve the sod, prior to installation.

1. **Application -** Unroll the sod, fitting each strip tightly to the preceding strip. Do not stretch the sod. Force each strip together as tightly as possible. Stagger the strips of sod to prevent the seams on adjacent rows from matching. Care will be taken to prevent heel or foot prints in the grade as the sod is being placed.

2. **Rolling -** As soon as the sod is placed, roll it with a light roller, making certain that no air space is left under the sod. After the first rolling, moisten the sod lightly and then allow the grass to dry off before the second rolling. The second rolling should be at a cross angle to the first rolling.

3. **Maintenance -** Upon completion of the installation, the Contractor will maintain the sod per manufacturers specifications and as approved by the Public Services Director and his/her designee.

8-8 **IRRIGATION MATERIALS -** Materials used in irrigation water systems will conform to these Improvement Standards:

A. **Approved Equal -** The words "approved equal" will mean any material deemed by the City to be acceptable for use within the City's water system as compared to products of specified manufacturers. Specifications for all materials (submittals) to be used on the project will be submitted to the City prior to start of construction. The submittal will include a letter with:

1. **Product -** A description of the product and the appropriate materials specification section number.

2. **Contact -** The name and telephone number of the contact person for the proposed product.

3. **Reference -** A list of other agencies that are using the proposed product (including names and telephone numbers).

Address the letter to the City Engineer. City staff may request a sample of the product for review. The Contractor will submit all material for review 35-days prior to contract award. All submittals will include documentation verifying contract award date. Contractors will allow 2 to 4 weeks review time by the City.

B. **Unapproved Materials -** Materials not approved for use on the project will be removed from the site within 24-hours if requested by the City Engineer and/or Director of Public Services and their designees.

C. **Backflow Prevention Device -** The backflow prevention device will be of a reduced pressure type and will be in accordance with these Public Facilities Improvement Standards.

D. **Electrical**

1. **Control Wire-** All wiring to be used for connecting the automatic controller to the electric solenoid actuated remote control valve will be type UF-600V, solid copper, PVC insulation, single conductor, UL approved underground feeder cable. All pilot or "hot" splicing wire at the valves or in the field will be made as follows: The splice

will be insulated with a 3M DBR #09053 Splice Kit, or approved equal. Field splices between the controllers and valves will not be allowed without prior approval of the City Engineer.

2. **Pull Box Covers -** Pull boxes will have reinforced concrete covers and will be inscribed "Irrigation 24 Volt". Covers will be provided with two 3/8-inch brass hold down bolts with brass washers and nuts. Nuts will be recessed below the surface of the cover. Pull boxes set in traffic areas will have steel covers designed to handle vehicle loading. Pull box covers will be heat branded “Pull Box” in 2-inch lettering.

3. **Service Unit and Meter Socket -** The combination service and termination point for metered service will be Tesco Class 21-000 service pedestal State of California Type 3, or approved equal.

4. **PVC Conduit-** All PVC conduit will be heavy-wall, schedule 40, with factory made bends, couplings and fittings.

E. **Irrigation Controller -** The irrigation system controller will be a Rainmaster DX Series. It will be housed in an exterior (16 gauge) weatherproof pedestal mounted lodging case. It will operate on 117 volts AC, 50/60 Hz power input and be capable of operating 24-volt AC electric control valves. In addition, the controller will be equipped with or will be capable of the following:

1. Each station will have the capability of being individually programmed to operate from one minute to nine hours, and from 59-minutes in one-minute intervals.

2. It will have a quick stations function that allows for rapid programming of a block of stations with the same watering period.

3. It will have three independent programs with four automatic starts per day per program.

4. Each program will have its own percentage function which allows the watering length of all stations in the program to be changed from 0% to 300% in 1% increments and always can display the original watering length of each station.

5. Each program will be capable of being set on either a seven-day weekly repeat cycle where the active days are displayed all at once or on a skip day basis where the user may select the number of days skipped, from one to thirty, between watering’s with the starting day selectable.

6. The controller will have a review program function, which, with one button, will sequentially bring all its programming information to the displays at a readable rate. The recall display will be interruptible at any time for changing of the program. Each program will provide a total duration watering time in hours and minutes.

7. The controller will allow for setting in a "rain mode" for up to seven days, after which it will revert to the "automatic mode".

8. Program may be protected by use of an access code.

9. Controller will be capable of being operated manually at any time without affecting the original program.

10. The controller will have a rechargeable battery back up to maintain time and the user's program.

11. The controller will have the capability of responding to external remote control signals when coupled to a master remote control system.

12. The controller will have a built-in self-test which allows the user to check each of the following:

    a. LED's for lighting and shorts

    b. The digital display for lighting and shorts

    c. Each key of the keyboard for integrity and proper function

    d. All stations capable of being operated manually at any valve

13. Output power capacity will be 24-VAC, 1-amp maximum, equivalent to 24-VA.

14. When the battery-operated controller is used, a PT2 NiCd rechargeable battery pack will be used.

    The controller will be housed in a pedestal type enclosure installed on a Class A Portland Cement Concrete foundation as recommended by the manufacturer of the controller. Enclosure will be a weatherproof, 16-gauge zinc coated metal locking case to which 2 keys will be provided. Enclosure will be grounded with a minimum 6-foot copper clad ground rod. The enclosure and accessories will be installed in conformance with the manufacturer's instructions and recommendations. Foundation to be a minimum of 4-inches deep and with sufficient width to prevent tipping.

F. Pipes and Fittings

1. **Mains -** Irrigation mains will be 3/4-inch or larger polyvinyl chloride pipe (PVC) Class 315 and will be manufactured of Type 1, Grade I or II, 2,000-psi design stress compound designated as PVC 1120 or 1220, and will conform to ASTM designation D1784 for rigid PVC compounds. All main lines of 3-inches or larger will be ring title. All plastic fittings will be molded Schedule 40 fittings manufactured

of the same material as the pipe and will be suitable for either solvent weld or threaded connections. Solvent weld type couplings and fittings will have a pressure rating equal to or greater than that of the pipe and will be a type recommended by the pipe manufacturer.

2. **Service Laterals -** Laterals will be ½-inch or larger PVC Class 200 and will be manufactured of Type 1, Grade I or II, 2,000-psi design stress compound designated as PVC 1120 and will conform to ASTM designation D1784 for rigid PVC compounds. All plastic fittings will be molded fittings manufactured of the same material as the pipe and will be suitable for either solvent weld or threaded connections. Solvent weld type couplings and fittings will have a pressure rating equal to or greater than that of the pipe and will be a type recommended by the pipe manufacturer. Brass pipe fittings will be 150-psi, banded pattern. All nipples will be of the same material as the pipe.

G. PVC Pipe Cements

1. **Primer-** For all sizes of PVC pipe and fittings, primer will be IPS P-70 PVC, Weld On #P-70 Primer, or approved equal.

2. **Cement-** For all sizes of PVC pipe and fittings, cement will be IPS 711, Weld on #711 Glue, or approved equal.

H. Sprinkler Heads - All sprinkler heads will be constructed of plastic or stainless steel and will be matched precipitation rate (MPR) nozzles equipped with a Seam-A-Matic (SAM) check valve or approved equal.

All sprinkler heads of a particular type or function in the system will be of the same manufacturer and will be marked with the manufacturer's name and identification in such a position that they can be identified without being removed from the system. All tree bubblers will be placed below grade in perforated pipe with crushed rock and geotextile fabric.

I. Sprinkler Risers - All ½-inch riser nipples will be threaded Schedule 80 PVC and swing joints will be Schedule 80 PVC threaded street ells. All 1-inch riser assemblies will consist of swing joints rated at 200 psi, 2-Schedule 80 PVC nipples and 1-Schedule 80 nipples.

J. Valves and Valve Boxes

1. **Remote Control Valves-** All Remote-Control Valves (RCV) will be 24-volts, 3.5-watt maximum, normally closed, spring-loaded and diaphragm actuated. They should have a mechanical self-cleaning internal control system. The RCV will be slow closing with no adjustments or settings required. A manual flow stem or throttle or close will be provided. Each RCV will be equipped with a petcock. The solenoid is to be corrosion proof and molded in epoxy resin to form one integral

unit. The RCV will have two inlet tapping's (furnished with one plugged) and capable of being installed as either a globe or angle valve. It must have a removable seat and be completely serviceable in the field without removing the valve body from the system. All RCV are to be isolated from the main line with a PVC Ball Valve and connected to the lateral with a schedule 80 union/fitting in the valve box. RCV used in drip irrigation systems will incorporate an adjustable pressure regulator with a regulating range of 5 to 200- psi. The RCV will be an electric solenoid type, and will be the Hydro-Rain Series 100 or approved equal.

2. **Gate Valves-** Gate valves will be bronze body, bronze mounted, double disc, parallel seat with non-rising stem. Gate valves will have "O" ring seals and have hubs suitable for use with the main distribution pipe furnished for the sprinkler system. See Standard Detail LSC-11.

3. **Quick Coupling Valves -** Quick coupling valves will be two- piece, 1-inch diameter Rain Bird 44RC with a coupler key, Rain Bird 44K single lug or approved equal. See Standard Detail LSC-12.

4. **Valve Boxes -** Valve boxes will be plastic with lock snap cover, green, with the word "Irrigation" embossed on the cover. Valve boxes will be Brooks or approved equal. Valve boxes installed below the finish grades will also include a 3M Marking Ball, or approved equal.

8-9 PLANTING MATERIAL

A. **Backfill -** Backfill used in tree and shrub holes will be a mixture of soil amendment (one-third) and excavated material (two-thirds), thoroughly mixed.

B. **Fertilizer -** Fertilizer will be a commercial inorganic fertilizer in the granular or pellet form. Fertilizer will be delivered to the site in containers labeled in accordance with the applicable State of California regulations, bearing the warranty of the producer for the grade furnished, and will be uniform in composition, dry and free flowing.

   1. **Turf and Planting Areas -** Pelleted types with analysis of 16-6-8.

   2. **Planting Holes -** Tablet types with an analysis of 20-10-5, Agriform Blue-Chip Tablets, 21- gram size, or approved equal.

C. **Herbicide -** A list of approved products includes: Surflan, Ronstar G, Ronstar WSP, or approved equal.

D. **Imported Topsoil -** Topsoil will be an imported fertile, friable soil of loamy character containing a normal amount of organic matter. It will be obtained from well-drained, arable land and will be free from refuse, roots, heavy or stiff clay and stones larger than 1-inch in size. Soil will be lab tested, containing the following percentages: Sand-between 45% and 52%; Silt-between 26 and 50%; Clay-between 6 and 26%. Sands will range from 2 to 0.05 millimeters in diameter; Silt from 0.05 to 0.002- millimeters in diameter; and Clay less than 0.002 millimeters in diameter.

E. **Mulch -** Mulch will be a fibrous, woody bark mixture. A list of approved products includes: CedarSafe Certified Playground Engineered Wood Fiber or Sierra Brown Decorative Mulch from Applied Landscape Materials, Inc.

F. **Plant Stock and Ground Cover -** Plants will be the variety, quantity and size indicated on the approved plans. Quality and size will conform to the State of California Grading Code of Nursery Stock, No. 1 grade. Nursery grown stock only will be used and will be free from insect pests and diseases.

All plants will comply with Federal and State laws requiring inspection for plant diseases and infestations. Inspection certificates required by law will accompany each shipment of plants, and certificates will be delivered to the Director of Public Services or his/her designee. All plants will be true to specified and size indicated, and will be tagged in accordance with State of California Grading Code of Nursery Stock; however, determination of plant species or variety will be made by the Director of Public Services or his/her designee and will be final.

Plants will be healthy, shapely and well rooted, and roots will show no evidence of having been root bound, restricted or deformed. Root conditions of plants in containers will be inspected by the Director of Public Works/City Engineer and determined by removal of earth from the roots of not less than two plants of each specified or variety from each source. In case the sample plants inspected are found to be defective, the Inspector reserves the right to reject the entire lot or lots of plants represented by the defective samples. All plants rendered unsuitable for planting because of this inspection will be immediately removed from the site.

Each plant will be handled and packed in the approved manner for that species or variety and all necessary precautions will be taken to ensure that the plants will arrive at the site of the work in the proper condition for successful growth without scarred or broken branches. Trucks used for transporting plants will be equipped with covers to protect plants from windburn.

Substitutions will not be permitted unless proof is submitted to the City Engineer that any plant specified is not obtainable. The Inspector will consider use of the nearest equivalent size or variety.

Plants will have straight trunks with the leader intact, undamaged and uncut. Trees will be well tapered in the trunk so that they will stand alone without the support of the nursery stake. Branching on the main leader will be in alternate locations and well-spaced apart with no severe crossing of branches. All old abrasions and cuts will be completely calloused over. All plants will be measured when their branches are in their normal positions. Height and spread dimensions indicated refer to the main body of the plant and not from branch or root tip to tip. Indicated sizes shown are before pruning. Plants will be pruned prior to delivery except upon approval of the City Engineer. Ground cover will be rooted plants, grown in flats unless otherwise approved by the Inspector.

G. **Seed -** Seed mixture will be 98% pure, and noxious weed free, with a minimum of 88% Germination. Seed variety or mix will be as specified on the plans and approved by the City Engineer. All seed will be cleaned Grade A "new crop" seed, delivered in the original unopened containers, and will bear a guaranteed analysis and dealer's label. The dealer may mix the seed provided a guaranteed statement or composition of mixture and percentages of purity and germination of each variety is attached to the sealed container. The seed will be pre-treated with a pre-emergence fungus preventative in accordance with the manufacturer's specifications. The seed containers will be stored immediately in a dry, weather and damp proof structure. Any seed, which has become wet, moldy or is otherwise damaged in transit or storage, will not be acceptable. Supplier & seed mixture will be approved by the Director of Public Services or his/her designee prior to delivery.

H. **Soil Amendment –** Soil Amendments will be determined by a recommendation by the Project Landscape Architect. Any soil amendment recommendations shall be reviewed and approved by the Director of Public Services or his/her designee. Soil amendment will be delivered to the job site bearing the warranty of the producer for the grade furnished and will be uniform in composition and free flowing. Grade will be 0 to ¼- inches with 15% maximum proportion of ¼- inch particles.

I. **Tree Stakes and Ties**

1. **Tree Stakes -** Tree stakes will be straight, close grained hardwood, and pointed at one end. Stakes will be pointed prior to treatment with copper naphthalene, which will penetrate stake surfaces to a minimum depth of ¼- inch. Tree stakes will consist of 2-inch diameter by 10-foot long, round stakes.

2. **Tree Ties -** A list of approved products includes: Rubber cinch type or approved equal.

3. **Earth Anchors -** The size of trees to be supported will determine the necessary holding capacity of these anchors. Anchor holding capacity to be approved by the Director of Public Services or his/her designee. A list of approved products includes: Duckbill®, or approved equal.

8-10 MAINTENANCE PERIOD

A. Preliminary Inspection - Upon completion of all irrigation and planting work, the Contractor will notify in writing the City that the landscaping is ready for preliminary inspection. The approval of the completed work will establish the beginning of the maintenance period. No partial approvals will be given.

B. Maintenance Period - The maintenance period will be 90-calendar days from the approval of the constructed improvements. A longer period may be required to establish acceptable stands of thriving plants.

C. Overall Maintenance Requirements - Maintenance will include all watering, weeding, mowing, fertilizing, cultivation, spraying and pruning necessary to keep the plant material in a healthy, growing condition and to keep the planted areas neat and attractive throughout the maintenance period. Maintenance will also include responsibility for maintaining adequate protection for all landscaped areas. Any damaged areas will be repaired at no additional expense to the City.

During the maintenance period, should the appearance of any plant indicate weakness and the probability of dying (in the opinion of the Director of Public Services or his/her designee) that plant will be replaced immediately by the Contractor at his own expense. Replacements will be made in the same manner as specified for the original planting. At the end of the maintenance period, all plant material will be in a healthy, growing condition and free of physical injury of any kind.

Maintenance includes all items constructed under the approved plans. All items will be maintained in an optimum working condition. The site will be kept free of debris, including emptying trash containers, by means of a general clean up twice a week.

D. Watering - All plants will be watered not less than twice a week. Each watering will be of such quantity as to provide optimum growth conditions. The Contractor will provide the equipment and means for its proper application.

E. Lawn Maintenance - Lawn areas which fail to germinate will be re-seeded at maximum 10-day intervals until a vigorous, uniform stand of turf is established. Lawn areas will be kept free of weeds, by hand pulling, or they may be sprayed with an approved selective chemical herbicide before the weeds exceed 2-inches in height.

Lawns will be mowed for the first time after establishment of a vigorous, uniform stand of turf has reached 3-inches. Lawns will be trimmed at the edges of curbs, walks, paving and other surface improvements. Clippings and debris will be removed from the site. Lawn will be mowed a second time when it again reaches a 3-inch height, except that the second cutting will be performed no sooner than 10-days after the first. Mowing will then take place at maximum 1-week intervals until final acceptance. After the second mowing, apply the second application of fertilizer per manufacturer's specifications.

F. **Plants -** Plants installed will be properly maintained by regular watering, cultivating, weeding, re-mulching, repair of stakes, pruning, and treatment of insects and pests. Any plants which are vandalized, diseased, dead or in an unhealthy condition will be replaced by the Contractor at his own expense within two weeks after notification from the City Inspector. Any lawn or plants damaged by herbicide will be replaced by the Contractor at his own expense. Maintenance will also include treatment or replacement due to fungus, diseases, rodents and insects.

G. **Weeding and Grading -** All areas to be weeded at intervals of not more than 10-days. Rocks, clods and debris that appear on the surface will be removed. Heaved, settled or eroded areas will be restored by excavating, filling, finish grading, rolling and re-seeding as required.

8-11 **CLEANING UP -** The Contractor will always keep the premises free from accumulations of waste, material or rubbish caused by his employees, or employees of the subcontractors, and at the completion of his work, will remove all rubbish from and about the site and all tools, scaffolding and/or surplus materials.

8-12 FINAL INSPECTION AND ACCEPTANCE

A. **Timing -** Final inspection will be conducted at the end of the maintenance period. Notice requesting the final inspection will be submitted in writing by the Contractor to the Director of Public Services or his/her designee at least 7 days prior to the anticipated date.

B. **Review -** Acceptance of the project by the City will be contingent upon proper maintenance and the establishment of a vigorous, uniform stand of turf, healthy plants, weeded site, repair of any damaged surface improvements, repair of any damaged irrigation components and a thorough cleaning of the site. Just prior to final inspection, Contractor will apply fertilizer per manufacturers specification.

Fertilizer will be spread around plant bases and thoroughly watered.

C. **Corrective Work**

1. **Turf -** Any portion of turf which does not show a vigorous, uniform stand will be replaced and will make all lawn areas subject to continued maintenance at the Contractor's expense.

2. **Plants -** Plants which are missing, vandalized, dead or unhealthy, will be replaced by the Contractor at his expense with the same species and sizes as specified on the approved plans. The Contractor will make replacements within two weeks after final inspection and maintain the plants for additional 30- days.

3. **Irrigation -** The irrigation system will be repaired to conform to the requirements of the approved plans and associated specifications.

D. **Final Acceptance -** If project improvements, corrective work and maintenance have not been performed as specified to the satisfaction of the Director of Public Services or his/her designee, maintenance will continue at the Contractor's expense until such time as work has been successfully completed. Once work has been performed as specified and to the satisfaction of the Director of Public Services or his/her designee, the City will assume maintenance responsibilities following the final inspection.

8-13 GUARANTEE

A. **Plants -** All trees, shrubs, ground covers and other plant materials will be guaranteed to take root, grow and thrive for a period of one year after final acceptance of work. Any trees or other plant materials that die back and lose the form and size specified on the approved plans will be replaced by the Contractor at his own expense, even though they have taken root and are growing after the die-back.

Within 15-days of written notification by the City, the Contractor is to remove and replace all guaranteed plant materials which, for any reason, fail to meet the requirements of this guarantee. Replacements will be made to the same specifications and materials as required on the approved plans and will carry this same guarantee from the time they are replaced.

B. **Irrigation -** The entire sprinkler system will be unconditionally guaranteed by the Contractor as to material and workmanship, including settling or backfilling areas below grade, for a minimum period of one year following the date of the final acceptance of the work.

If, during the guarantee period, settlement occurs and adjustments in pipes, valves, sprinkler heads, sod or paving is necessary to bring the system, sod or paving to the proper level of the permanent grades, the Contractor will make the adjustments at his own expense, including the complete restoration of all damaged planting, paving or other improvements of any kind.

Should any operational difficulties in connection with the sprinkler system develop within the specified guarantee period, which, in the opinion of the City, may be due to inferior material and/or workmanship, said difficulties will be immediately corrected by the Contractor to the satisfaction of the City at no additional costs to the City, including any and all other damage caused by such defects.

LANDSCAPING & IRRIGATION DETAILS

Tree Planting *LSC-1*
Tree Planting on Slope *LSC-2*
Groundcover Planting *LSC-3*
Shrub Planting Detail *LSC-4*
Shrub Planting on Slope *LSC-5*
Pipe Trenching Detail *LSC-6*
Landscaping Conduit Under Pavement *LSC-7*
Thrust Block Details *LSC-8*
Above Grade Emitter *LSC-9*
Pop-Up Spray Head *LSC-10*
Gate Valve-3" & Smaller *LSC-11*
Quick Coupling Valve Details *LSC-12*
Tree Bubbler *LSC-13*
Electric Control Valve and Gate Valve *LSC-14*
Below Grade Electric Control and Gate Valve *LSC-15*
Flow Sensor Detail *LSC-16*
Concrete Walk *LSC-17*
Asphalt Concrete Walk *LSC-18*
Exposed Aggregate Paving *LSC-19*
Decomposed Granite *LSC-20*
Collapsible Bollard *LSC-21*
Bike Path Striping/Bollard Installation *LSC-22*
Redwood Header Board *LSC-23*
Post & Cable *LSC-24*
Redwood Fence *LSC-25*
Chain Link Fence Detail One *LSC-26*
Chain Link Fence Detail Two *LSC-27*

[THIS PAGE INTENTIONALLY LEFT BLANK]

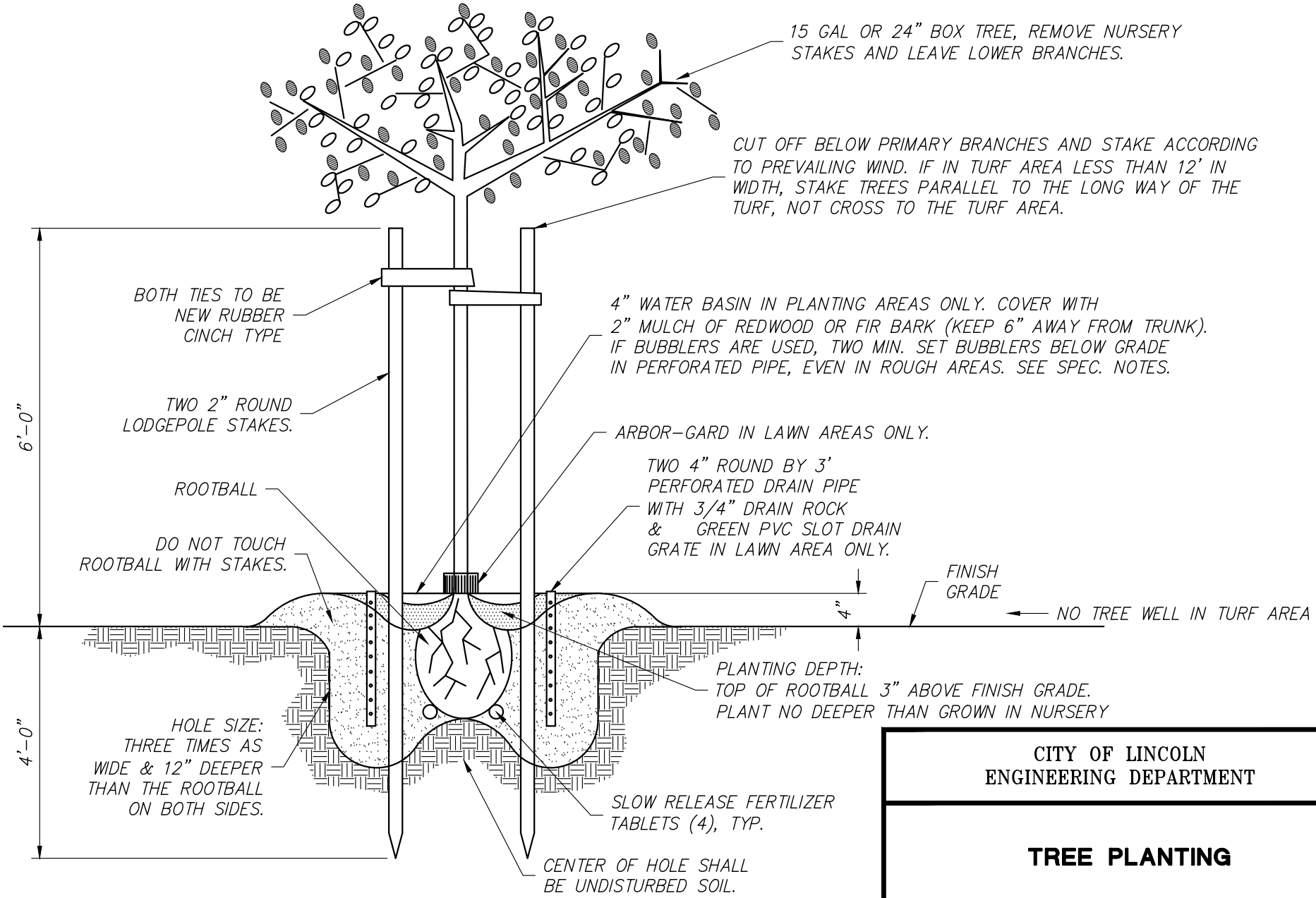

CITY OF LINCOLN
ENGINEERING DEPARTMENT

TREE PLANTING

REVISIONS:	DATES:	APPROVED:
		CITY ENGINEER DATE

SCALE: NONE
DATE: SEPTEMBER 2019
DRAWN BY: C.G.

LSC-1

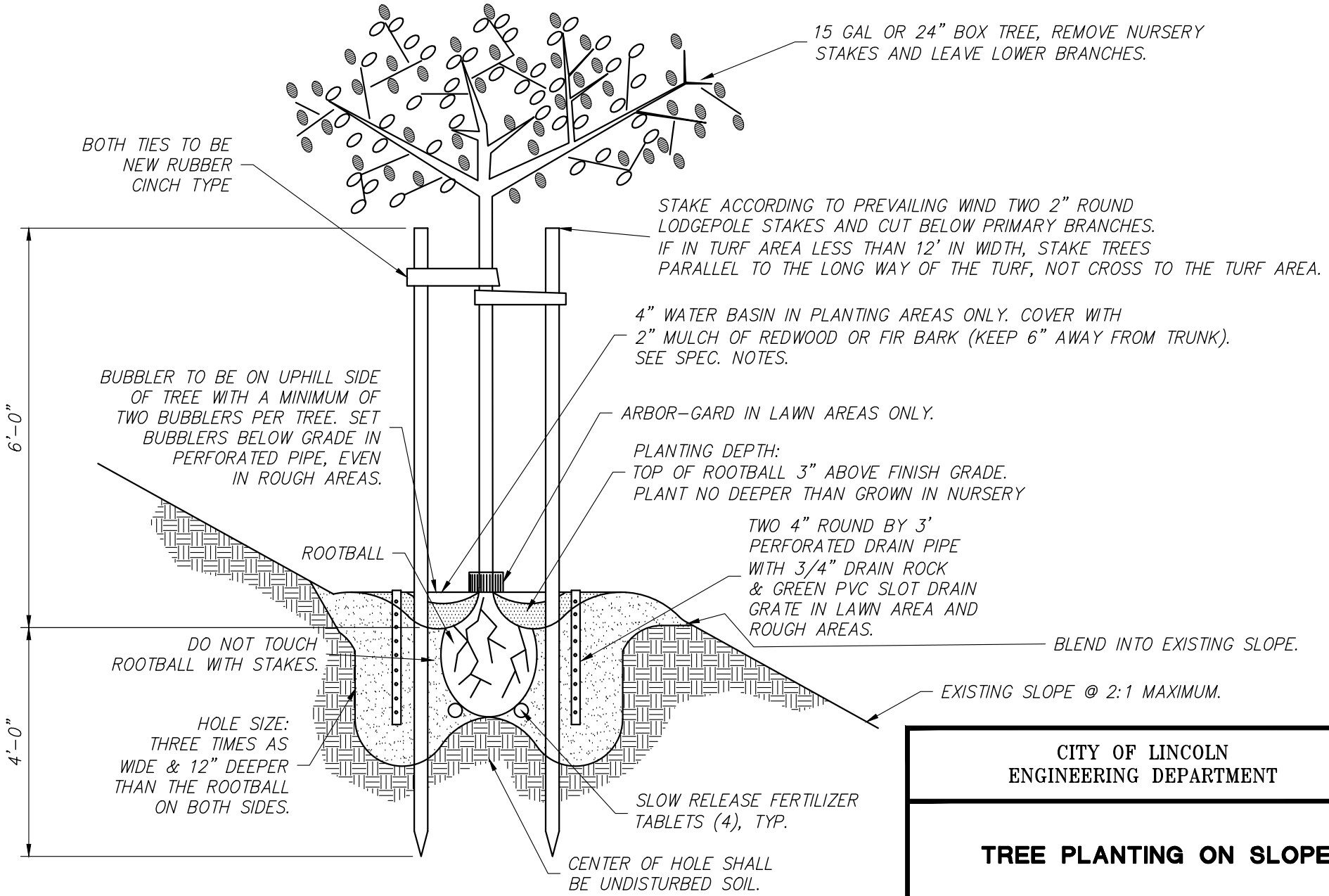

CITY OF LINCOLN
ENGINEERING DEPARTMENT

TREE PLANTING ON SLOPE

REVISIONS:	DATES:	APPROVED:
		CITY ENGINEER DATE

SCALE: NONE
DATE: SEPTEMBER 2019
DRAWN BY: C.G.

LSC-2

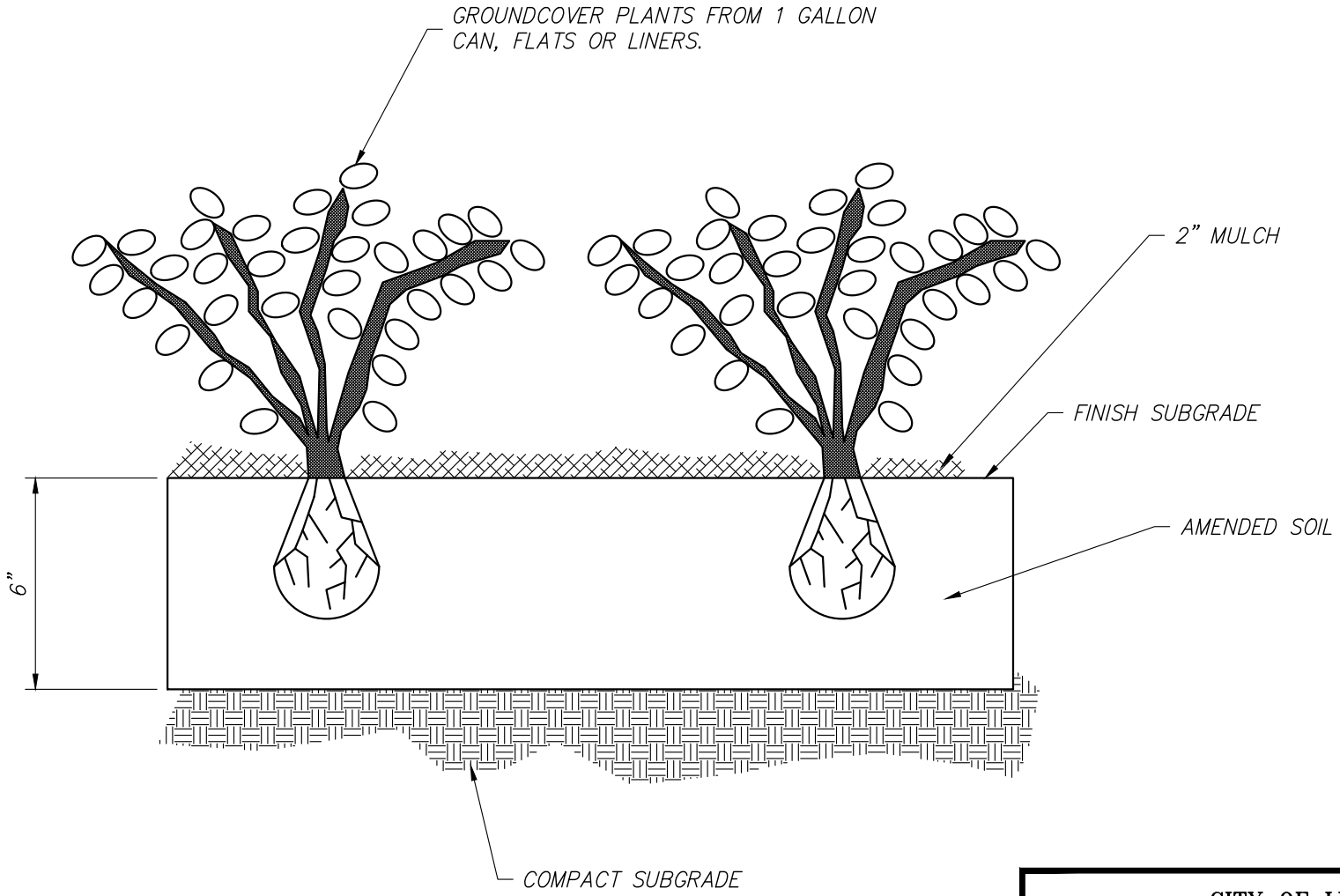

CITY OF LINCOLN
ENGINEERING DEPARTMENT

GROUNDCOVER PLANTING

REVISIONS:	DATES:	APPROVED:
		CITY ENGINEER DATE

SCALE: NONE
DATE: SEPTEMBER 2019
DRAWN BY: C.G.

LSC-3

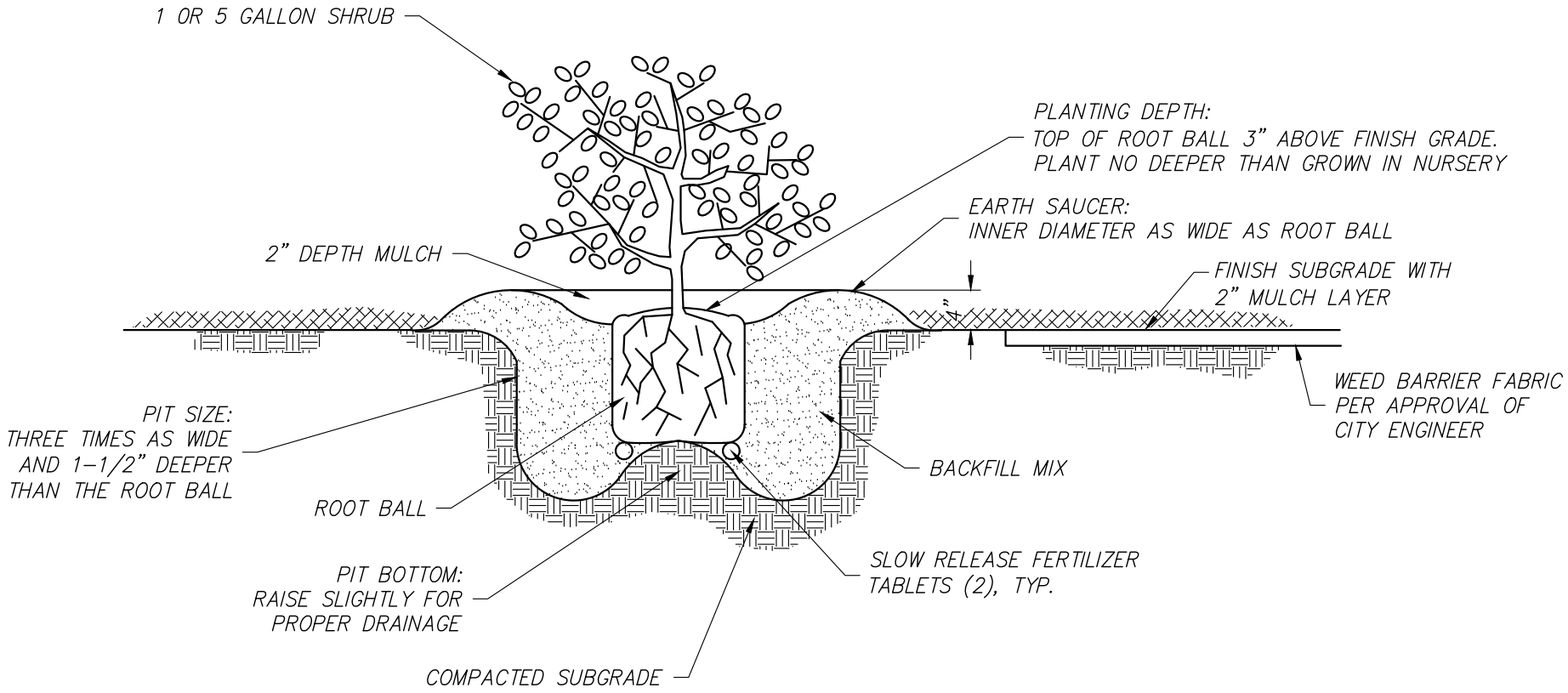

NOTES:

1. PROVIDE CITY WITH PLANTING MIXTURE SPECIFICATIONS
2. PLANTER AREA SHOULD HAVE PRE-EMERGENT HERBICIDE APPLIED BEFORE PLANTING TO PREVENT GERMINATION OF WEED SEEDS
3. WEED BARRIER FABRIC SHALL BE UTILIZED IN ALL PUBLIC MAINTAINED LANDSCAPE AREAS.

CITY OF LINCOLN
ENGINEERING DEPARTMENT

SHRUB PLANTING DETAIL

REVISIONS:	DATES:	APPROVED:
		CITY ENGINEER DATE

SCALE: NONE
DATE: SEPTEMBER 2019
DRAWN BY: C.G.

LSC-4

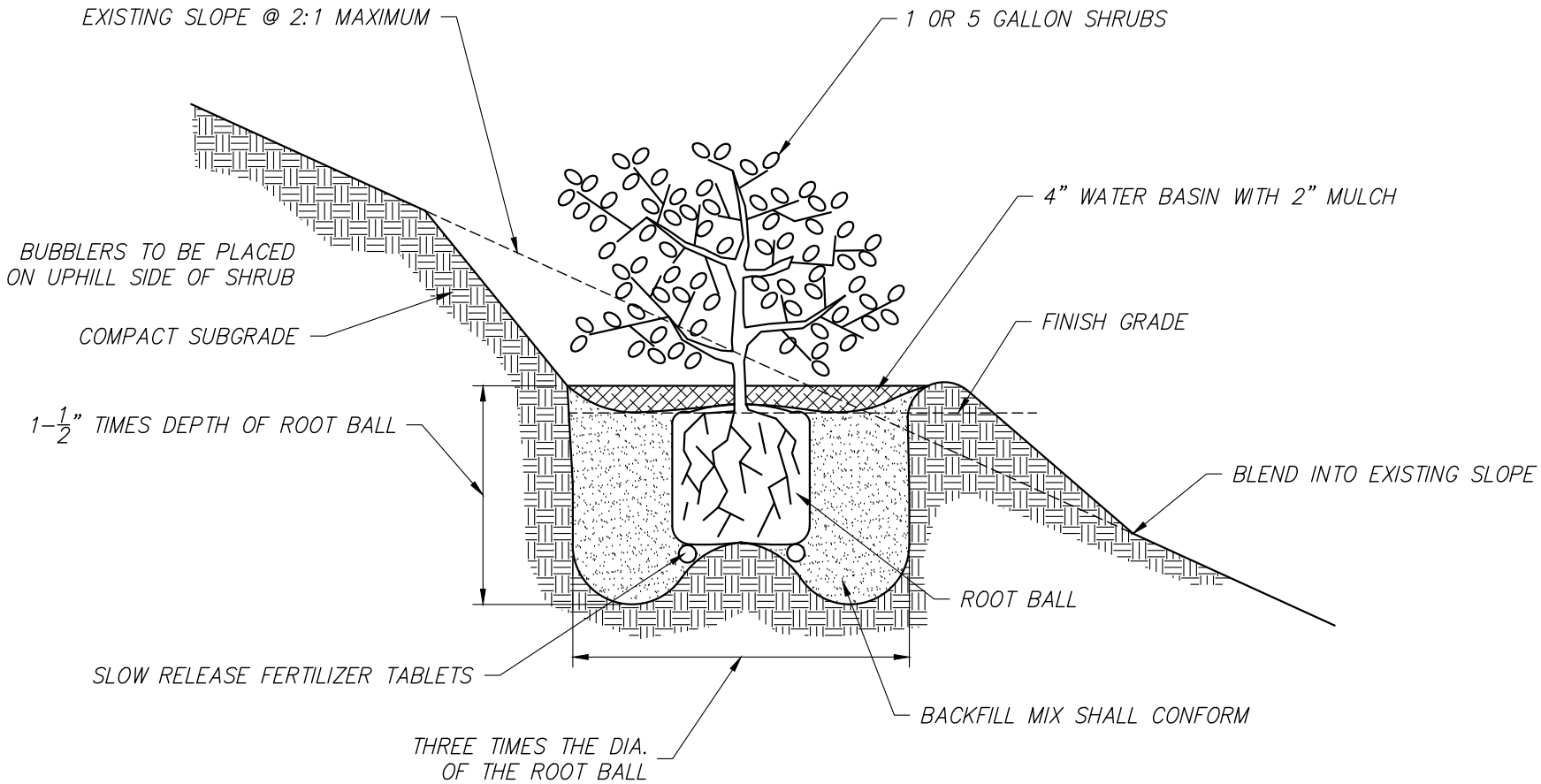

NOTE: PLANTER AREAS SHALL HAVE PRE-EMERGENT HERBICIDE APPLIED BEFORE PLANTING TO PREVENT GERMINATION OF WEED SEEDS

CITY OF LINCOLN
ENGINEERING DEPARTMENT

SHRUB PLANTING ON SLOPE

REVISIONS:	DATES:	APPROVED:
		CITY ENGINEER DATE

SCALE: NONE
DATE: SEPTEMBER 2019
DRAWN BY: C.G.

LSC-5

NON PRESSURE LATERAL

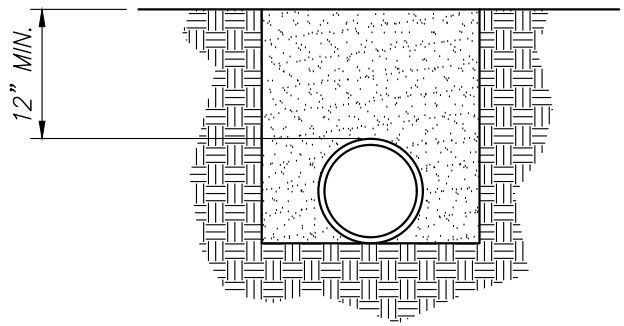

PRESSURE MAIN LINE

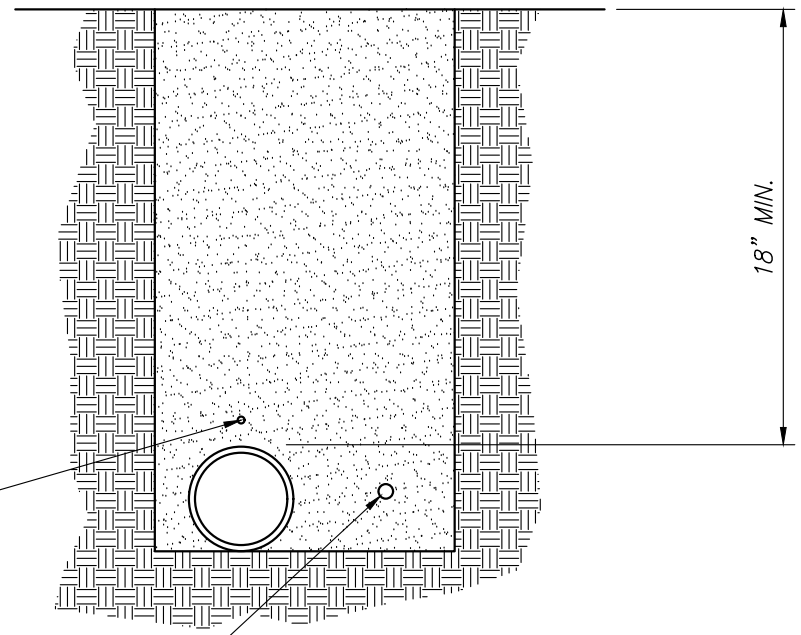

INSTALL #10 JACKETED COPPER TRACE WIRE IN MAINLINE TRENCH, LEAVE 8" LOOP EXPOSED IN EACH VALVE BOX. SOLDER ANY SPLICES IN TRACE WIRE.

CONTROL WIRE ADJACENT TO PRESSURE MAIN LINE. BUNDLE TAPE AT 10'-0" INTERVAL TO PIPE.

BUNDLE TAPE AT 4'-6" INTERVALS FOR MORE THAN ONE WIRE.

CITY OF LINCOLN
ENGINEERING DEPARTMENT

PIPE TRENCHING DETAIL

REVISIONS:	DATES:	APPROVED:
		CITY ENGINEER DATE

SCALE: NONE
DATE: SEPTEMBER 2019
DRAWN BY: C.G.

LSC-6

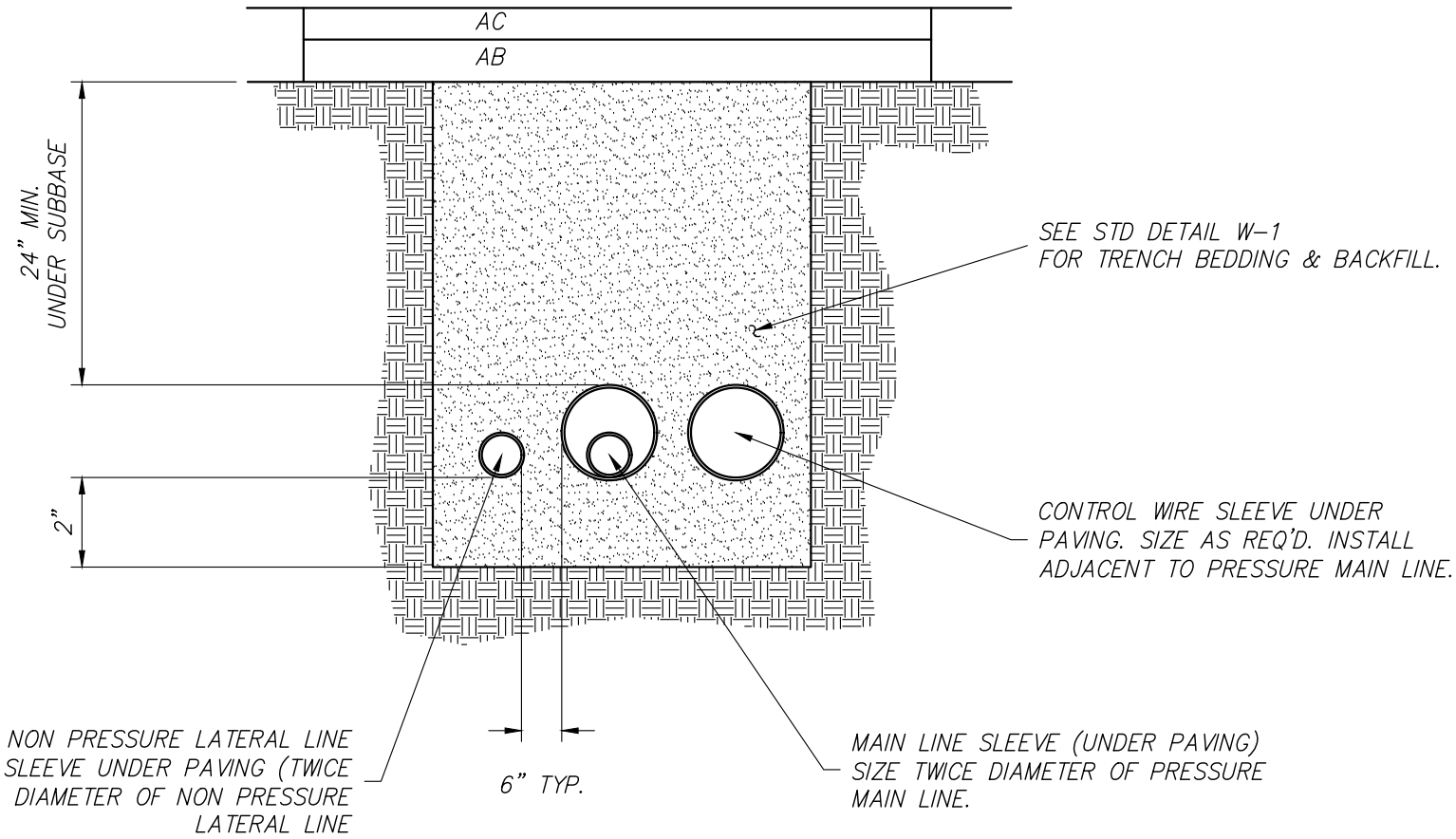

NOTES:

1. ALL SLEEVES TO BE SCH 40 PVC.
2. EXTEND ALL SLEEVES 12" BEYOND EDGE OF HARDSCAPING AT BOTH ENDS, CAP ENDS AND FLAG LOCATIONS.
3. TRENCHES LESS THAN 2 FT IN WIDTH WILL BE BACKFILLED WITH A 2-SAC SLURRY MIX.

CITY OF LINCOLN
ENGINEERING DEPARTMENT

LANDSCAPE CONDUIT UNDER PAVEMENT

REVISIONS:	DATES:	APPROVED:
		CITY ENGINEER DATE

SCALE: NONE
DATE: SEPTEMBER 2019
DRAWN BY: C.G.

LSC-7

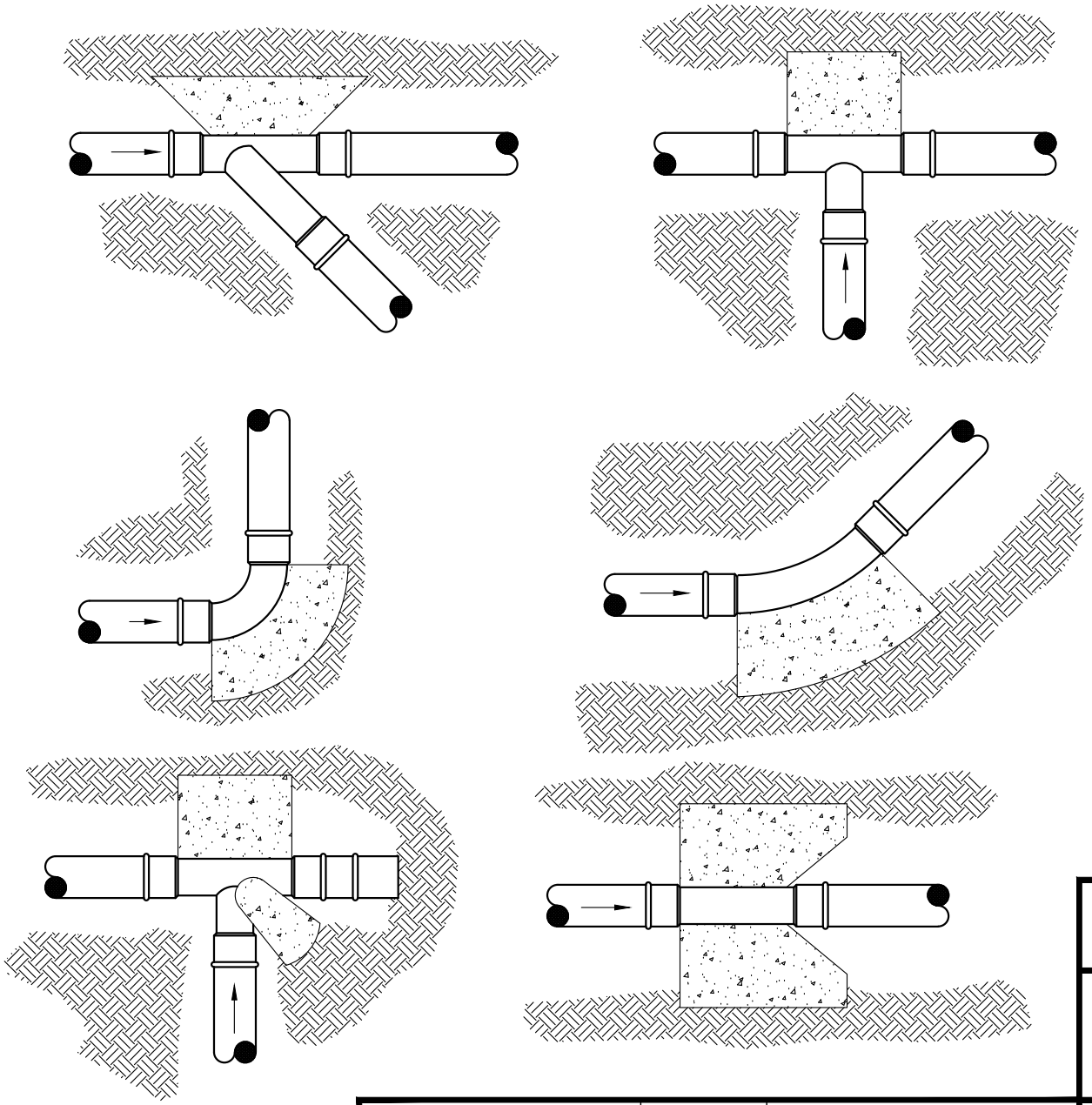

NOTES:

1. *DO NOT COVER JOINTS WITH CONCRETE.*
2. *SIZE THE THRUST BLOCKS AS SPECIFIED BY THE PIPE MANUFACTURER, AND STD DET W-6*

CITY OF LINCOLN
ENGINEERING DEPARTMENT

THRUST BLOCK DETAILS

REVISIONS:	DATES:	APPROVED:
		CITY ENGINEER DATE

SCALE: NONE
DATE: SEPTEMBER 2019
DRAWN BY: C.G.

LSC-8

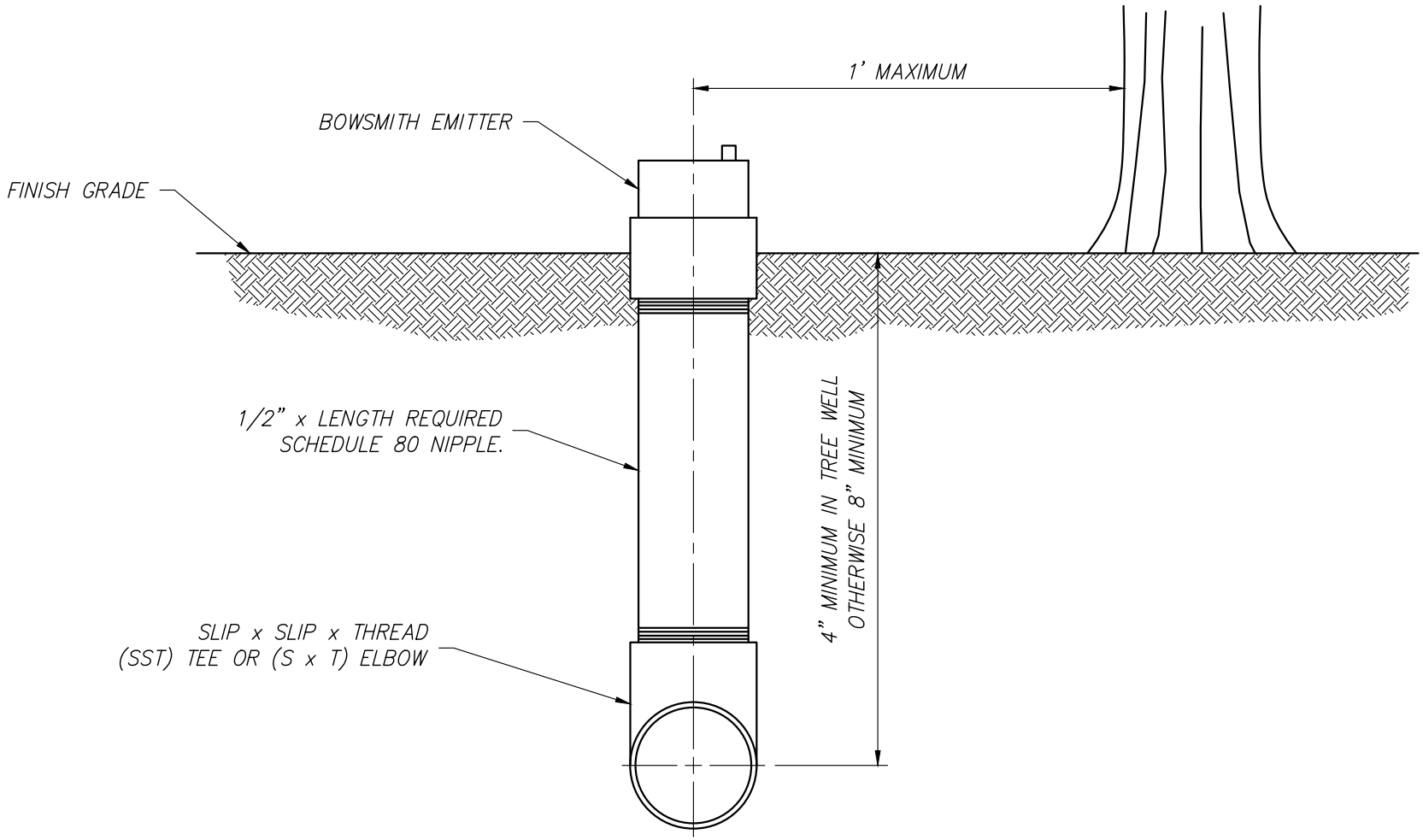

NOTES:

1. LOCATE EMITTER ON UP-HILL SIDE OF THE TREE OR SHRUB.
2. DO NOT TEE STRAIGHT UP OFF LATERAL. TEE HORIZONTAL THEN 90 DEGREES VERTICAL.

CITY OF LINCOLN
ENGINEERING DEPARTMENT

ABOVE GRADE EMITTER

REVISIONS:	DATES:	APPROVED:
		CITY ENGINEER DATE

SCALE: NONE
DATE: SEPTEMBER 2019
DRAWN BY: C.G.

LSC-9

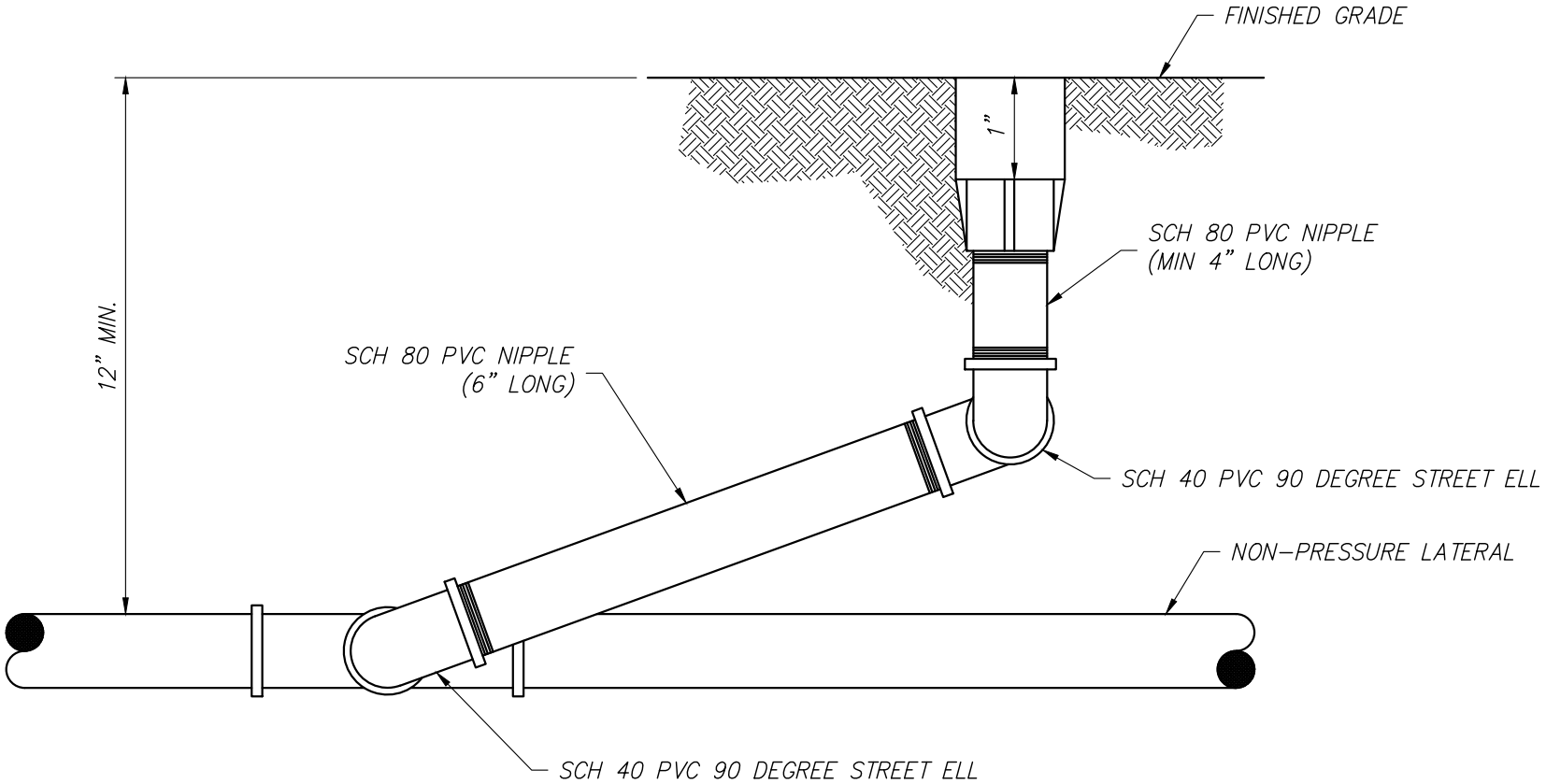

NOTES:

1. LOCATE HEAD 2" FROM WALKS, CURBS, HARDSCAPING, MOW STRIPS, AND HEADER BOARDS.
2. LOCATE STREAM SPRAY/BUBBLERS 6" FROM ALL STRUCTURES, AND SPRAY HEADS 12" FROM ALL STRUCTURES, BUT 6" FROM ALL STRUCTURES IN GROUND COVER AREAS.
3. USE TEFLON TAPE ON ALL THREADED FITTINGS EXCEPT BETWEEN MARLEX FITTINGS.

CITY OF LINCOLN
ENGINEERING DEPARTMENT

POP-UP SPRAY HEAD

REVISIONS:	DATES:	APPROVED:
		CITY ENGINEER DATE

SCALE: NONE
DATE: SEPTEMBER 2019
DRAWN BY: C.G.

LSC-10

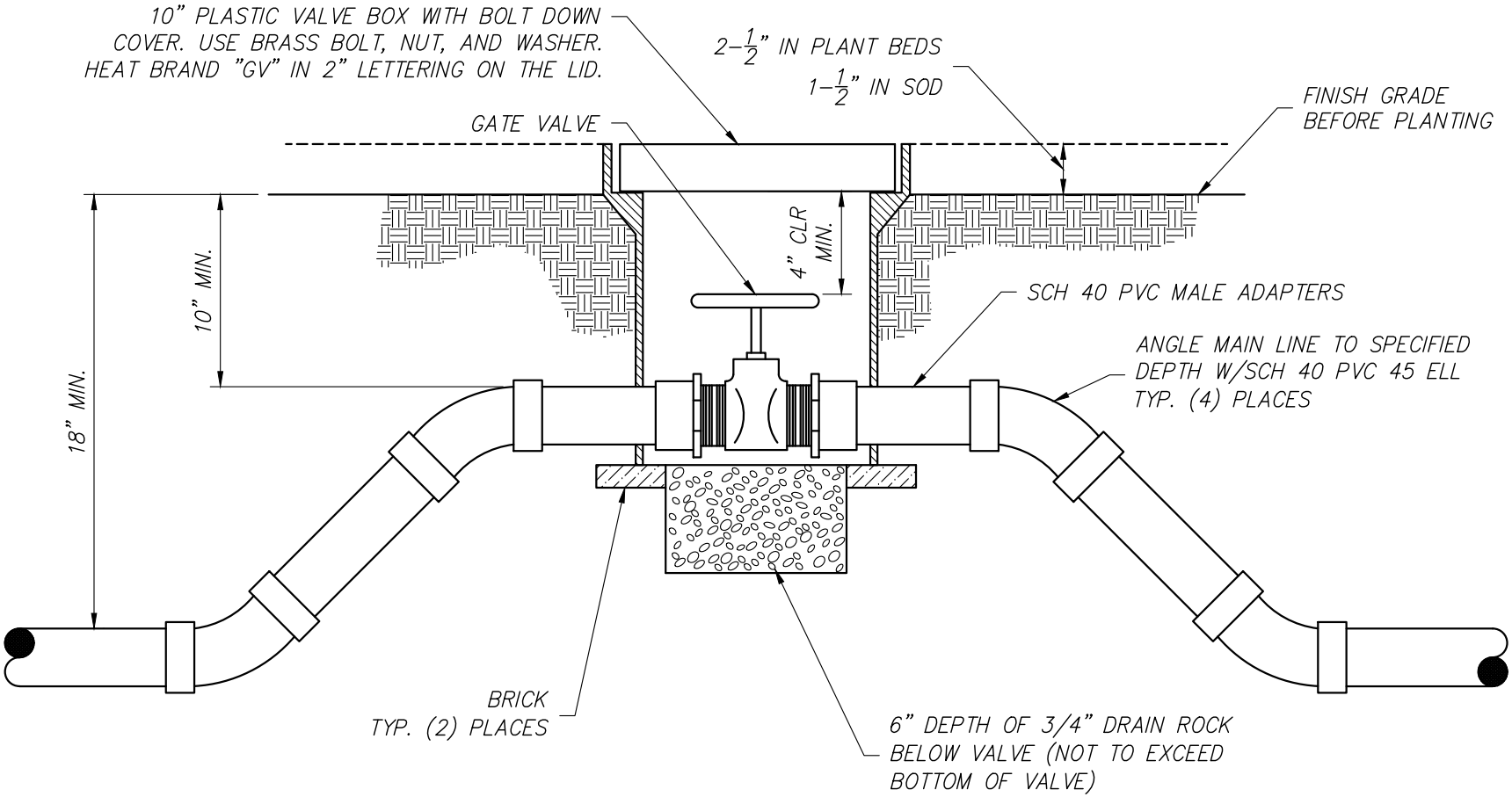

NOTES:

1. PLACE 3/4" DIA. ROCK PRIOR TO INSTALLATION OF VALVE BOX.
2. GATE VALVE AND FITTINGS SHALL BE LINE SIZE UNLESS NOTED OTHERWISE.
3. USE TEFLON TAPE ON ALL THREADED FITTINGS.

CITY OF LINCOLN
ENGINEERING DEPARTMENT

GATE VALVE - 3" & SMALLER

REVISIONS:	DATES:	APPROVED:
		CITY ENGINEER DATE

SCALE: NONE
DATE: SEPTEMBER 2019
DRAWN BY: C.G.

LSC-11

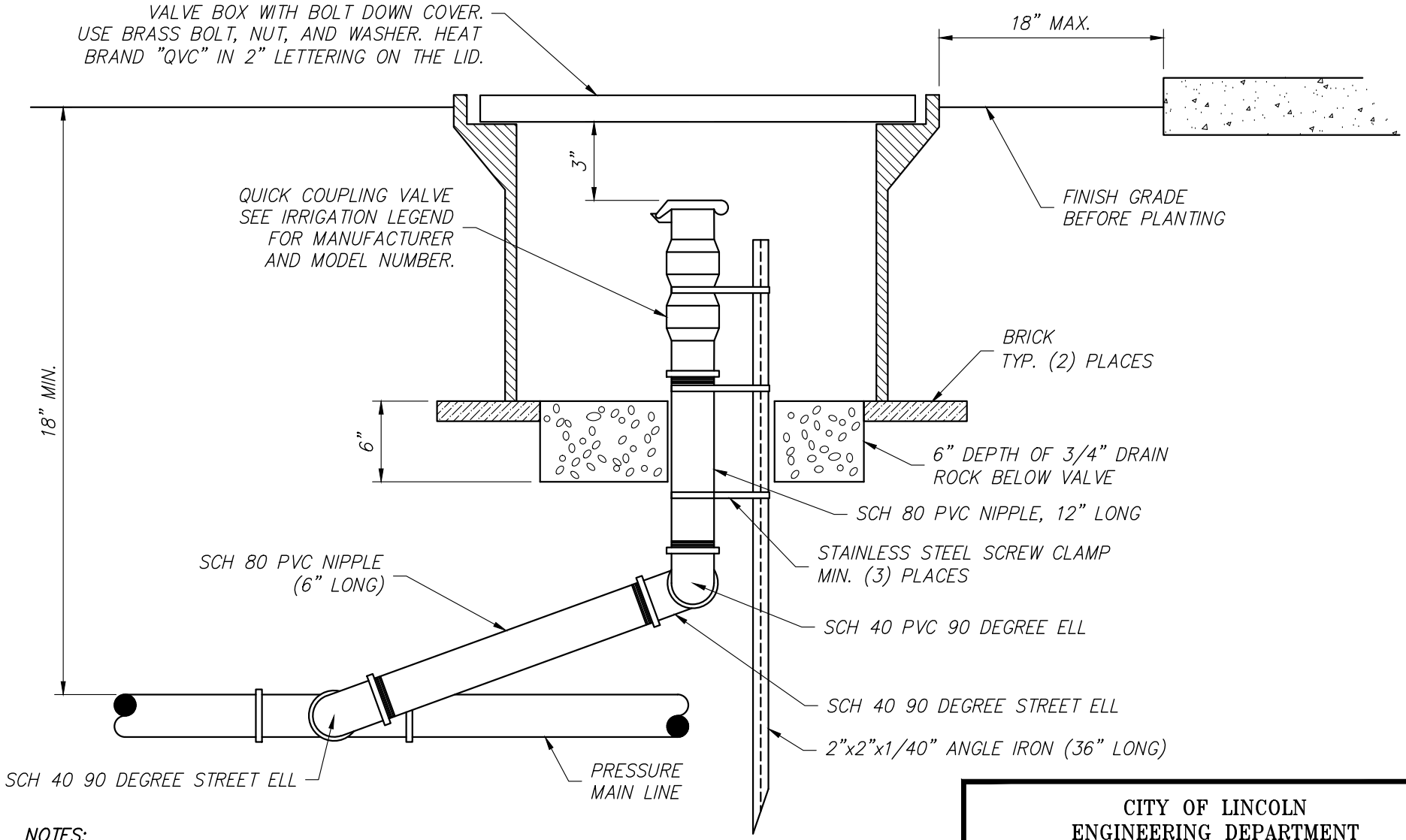

NOTES:

1. SEE 8-5(1) FOR VALVE BOX INSTALLATION DETAILS.
2. USE TEFLON TAPE ON ALL THREADED CONNECTIONS.

CITY OF LINCOLN
ENGINEERING DEPARTMENT

QUICK COUPLING VALVE DETAIL

REVISIONS:	DATES:	APPROVED:
		CITY ENGINEER DATE

SCALE: NONE
DATE: SEPTEMBER 2019
DRAWN BY: C.G.

LSC-12

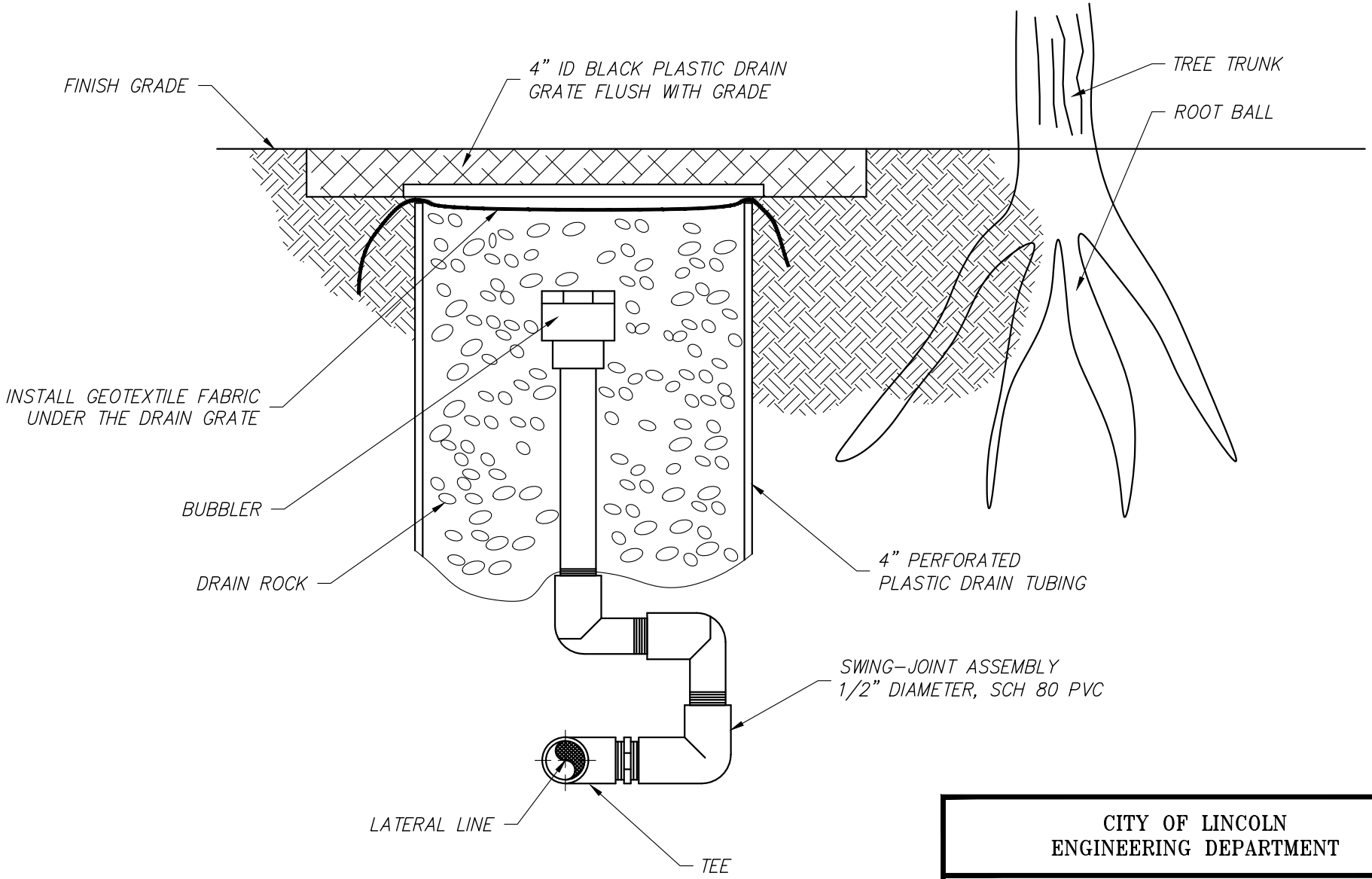

NOTE: ROOT BALL ADJACENT TO PERFORATED PIPE HOLES TO FACE ROOT BALL.

CITY OF LINCOLN
ENGINEERING DEPARTMENT

TREE BUBBLER

REVISIONS:	DATES:	APPROVED:
		CITY ENGINEER DATE

SCALE: NONE
DATE: SEPTEMBER 2019
DRAWN BY: C.G.

LSC-13

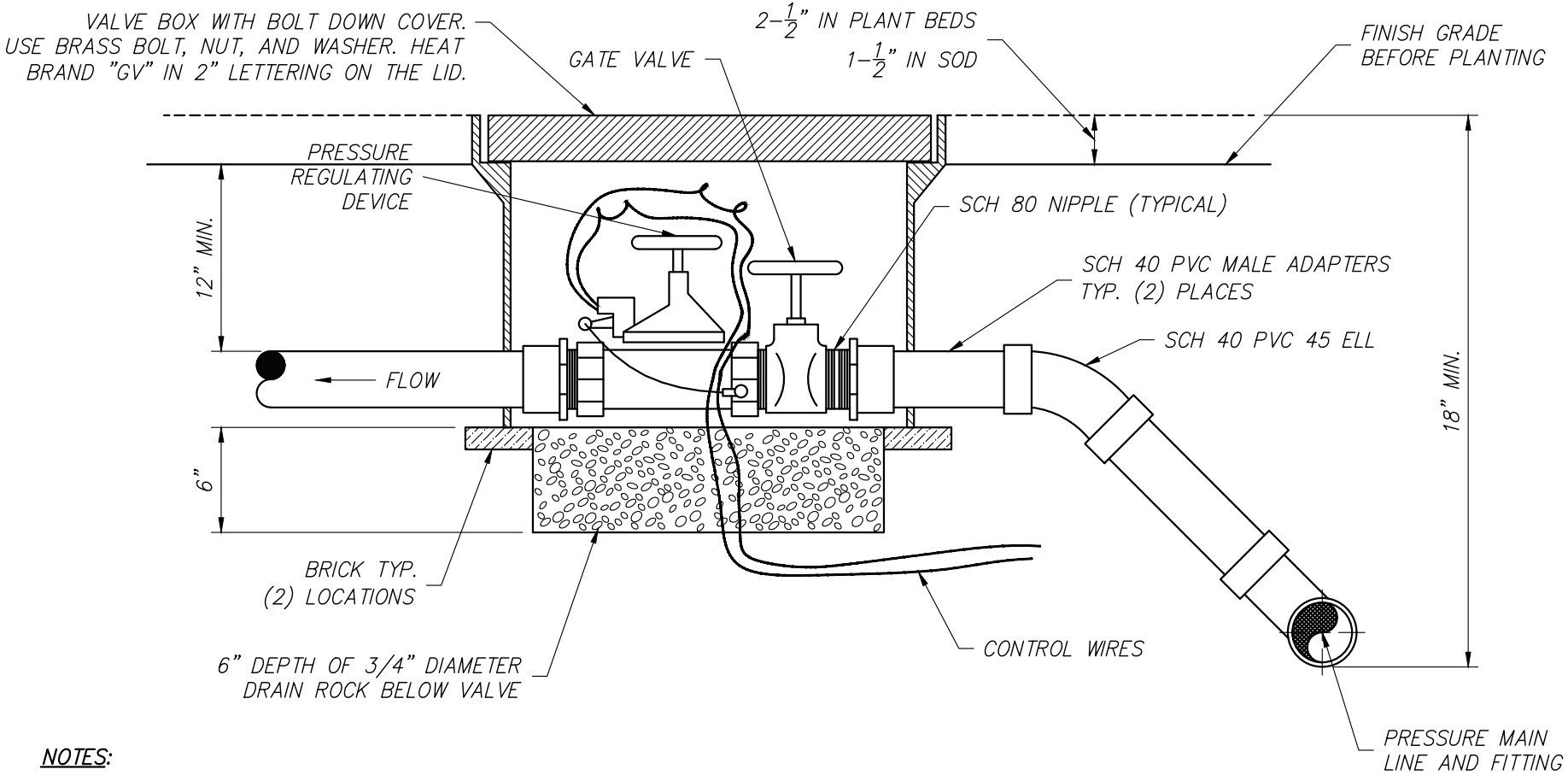

NOTES:

1. INSTALL CONTROL VALVES A MINIMUM OF 12" FROM STRUCTURES OR HARDSCAPE.
2. INSTALL VALVES IN PLANT BEDS WHEREVER POSSIBLE.
3. PLACE VALVE BOX AT RIGHT ANGLES TO STRUCTURES OR HARDSCAPE.
4. SEE 8-5 (I) FOR VALVE BOX INSTALLATION DETAILS.
5. USE TEFLON TAPE ON ALL MALE THREADS.

CITY OF LINCOLN
ENGINEERING DEPARTMENT

ELECTRIC CONTROL VALVE AND GATE VALVE

REVISIONS:	DATES:	APPROVED:
		CITY ENGINEER DATE

SCALE: NONE
DATE: SEPTEMBER 2019
DRAWN BY: C.G.

LSC-14

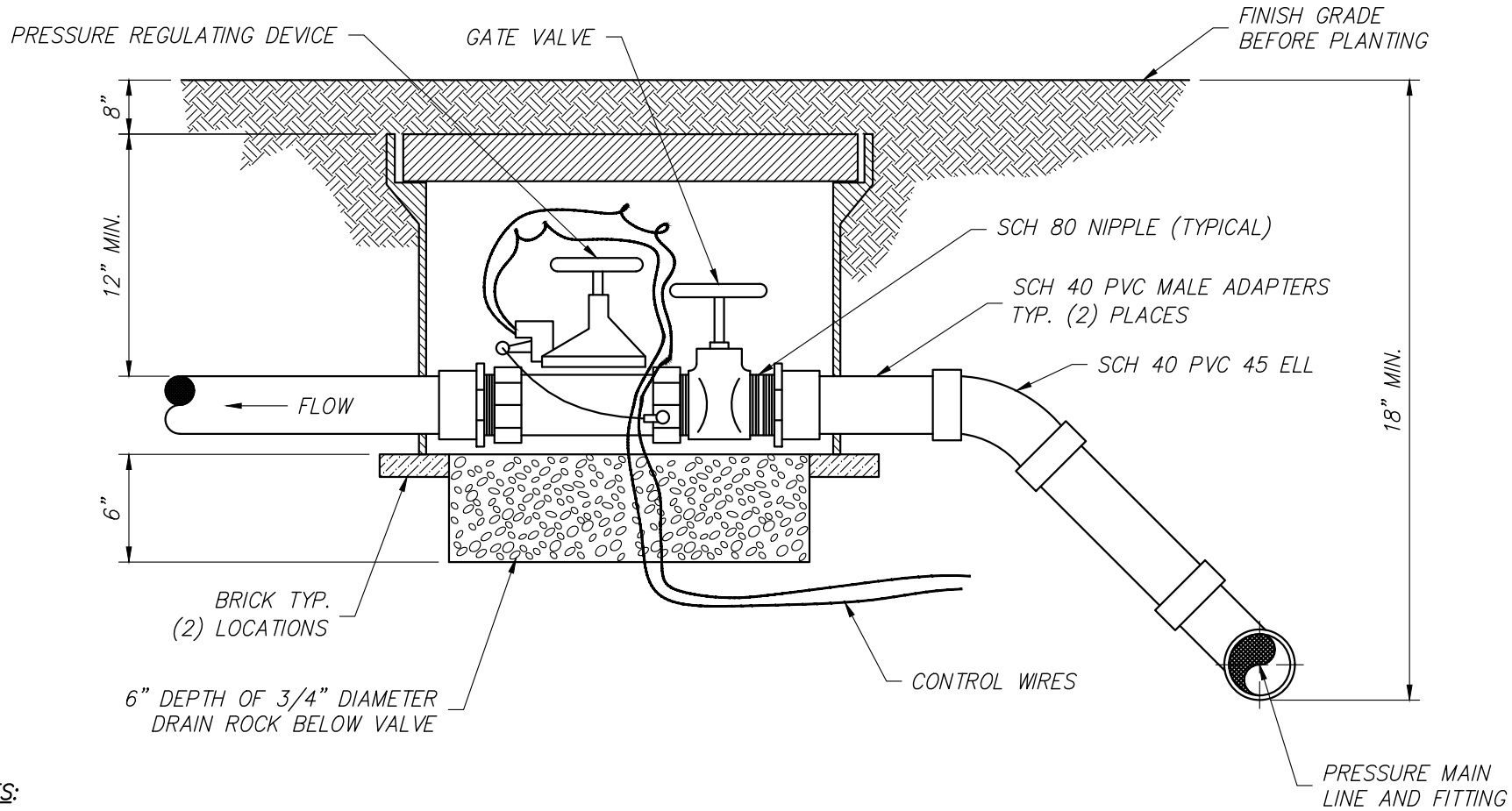

NOTES:

1. INSTALL CONTROL VALVES A MINIMUM OF 12" FROM STRUCTURES OR HARDSCAPE.
2. INSTALL VALVES IN PLANT BEDS WHEREVER POSSIBLE.
3. PLACE VALVE BOX AT RIGHT ANGLES TO STRUCTURES OR HARDSCAPE.
4. SEE 8-5 (I) FOR VALVE BOX INSTALLATION DETAILS
5. USE TEFLON TAPE ON ALL MALE THREADS.

CITY OF LINCOLN
ENGINEERING DEPARTMENT

BELOW GRADE ELECTRIC CONTROL AND GATE VALVE

REVISIONS:	DATES:	APPROVED:
		CITY ENGINEER DATE

SCALE: NONE
DATE: SEPTEMBER 2019
DRAWN BY: C.G.

LSC-15

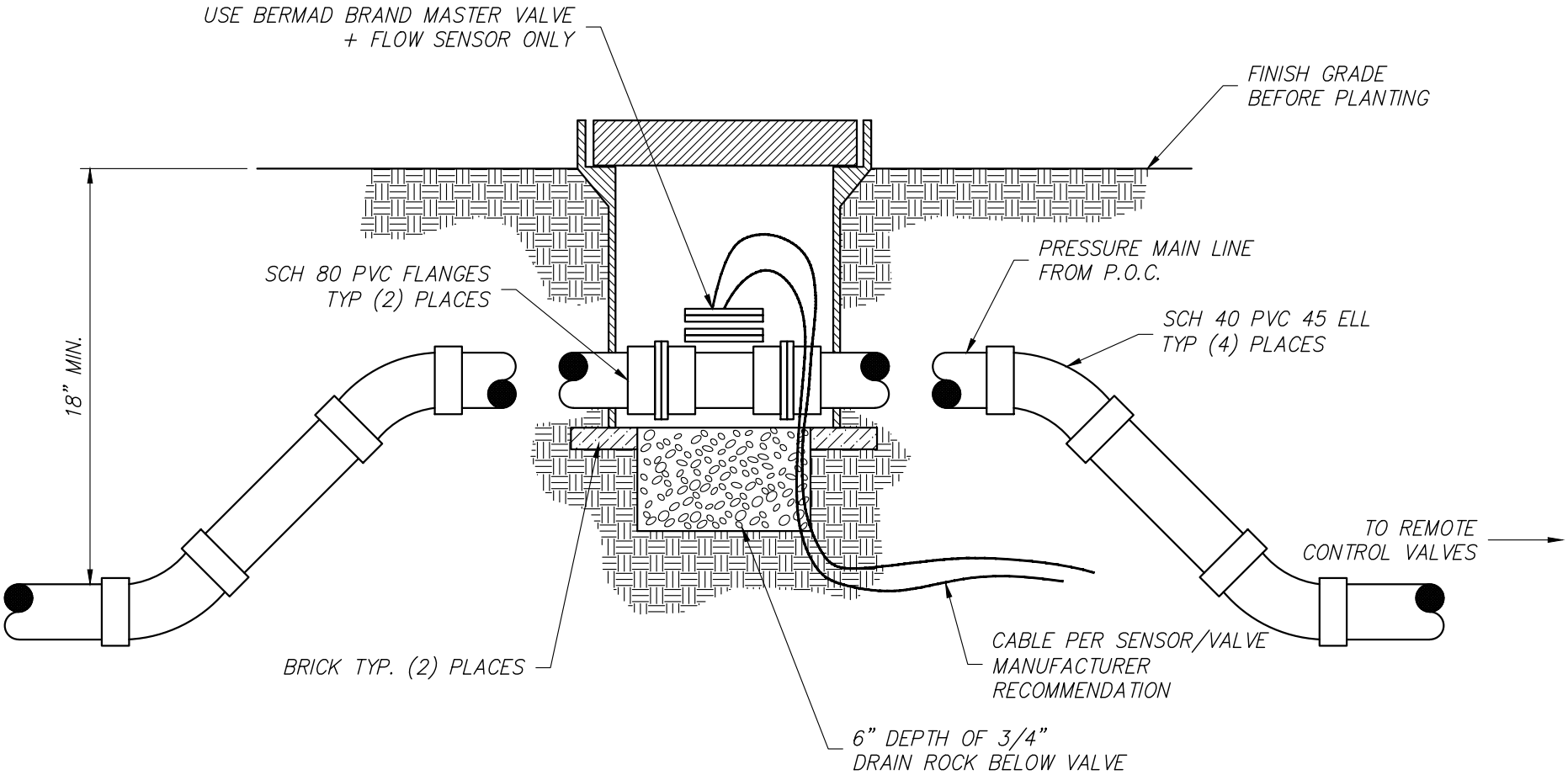

NOTES:

1. INSTALL FLOW SENSOR A MINIMUM OF 12" FROM STRUCTURES OR HARDSCAPING
2. INSTALL FLOW SENSOR IN PLANT BEDS WHEREVER POSSIBLE
3. PLACE VALVE BOX AT RIGHT ANGLE TO STRUCTURES OR HARDSCAPING
4. SENSOR CABLE SHALL BE BROUGHT BACK TO CONTROLLER IN 1" GRAY SCH 40 PVC CONDUIT

CITY OF LINCOLN
ENGINEERING DEPARTMENT

FLOW SENSOR DETAIL

REVISIONS:	DATES:	APPROVED:
		CITY ENGINEER DATE

SCALE: NONE
DATE: SEPTEMBER 2019
DRAWN BY: C.G.

LSC-16

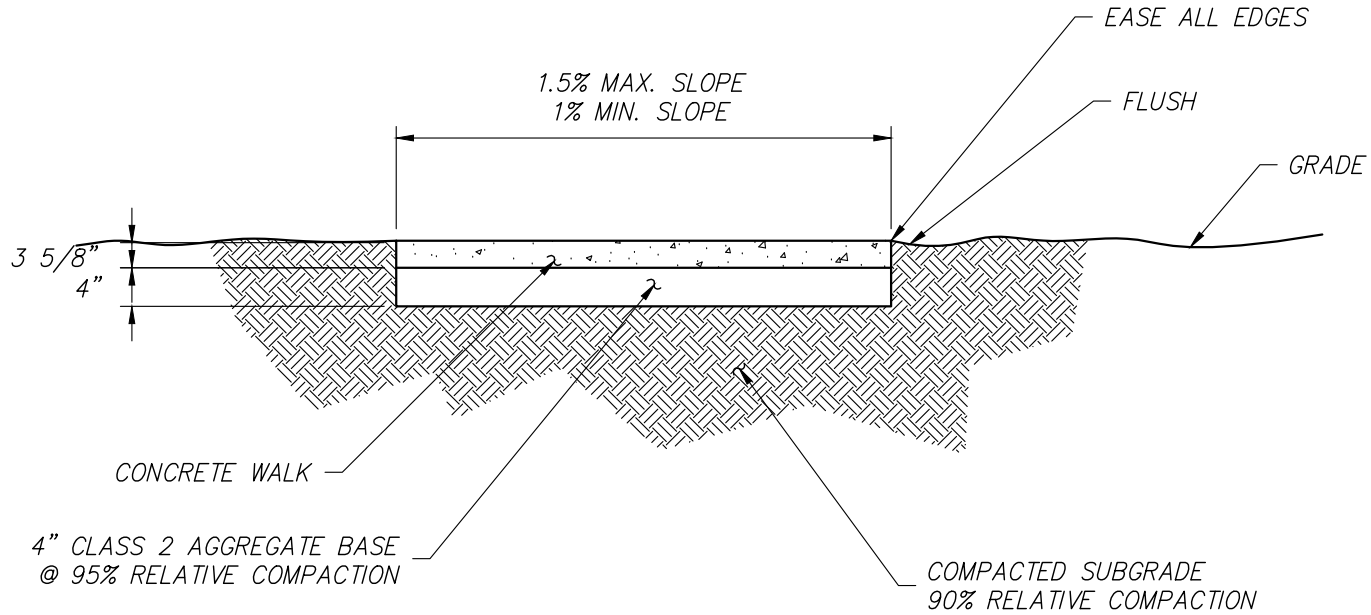

NOTES:

1. PROVIDE WEAKENED PLANE JOINTS 1" DEEP AT 10'-0" INTERVALS.
2. PROVIDE EXPANSION JOINT AT 20'-0" INTERVALS WHERE CONCRETE WALK JOINS ANOTHER.
3. CLASS "A" SIX SACK CONCRETE.
4. BROOM FINISHED UNLESS SPECIFIED OTHERWISE.

CITY OF LINCOLN
ENGINEERING DEPARTMENT

CONCRETE WALK

REVISIONS:	DATES:	APPROVED:
		CITY ENGINEER DATE

SCALE: NONE
DATE: SEPTEMBER 2019
DRAWN BY: C.G.

LSC-17

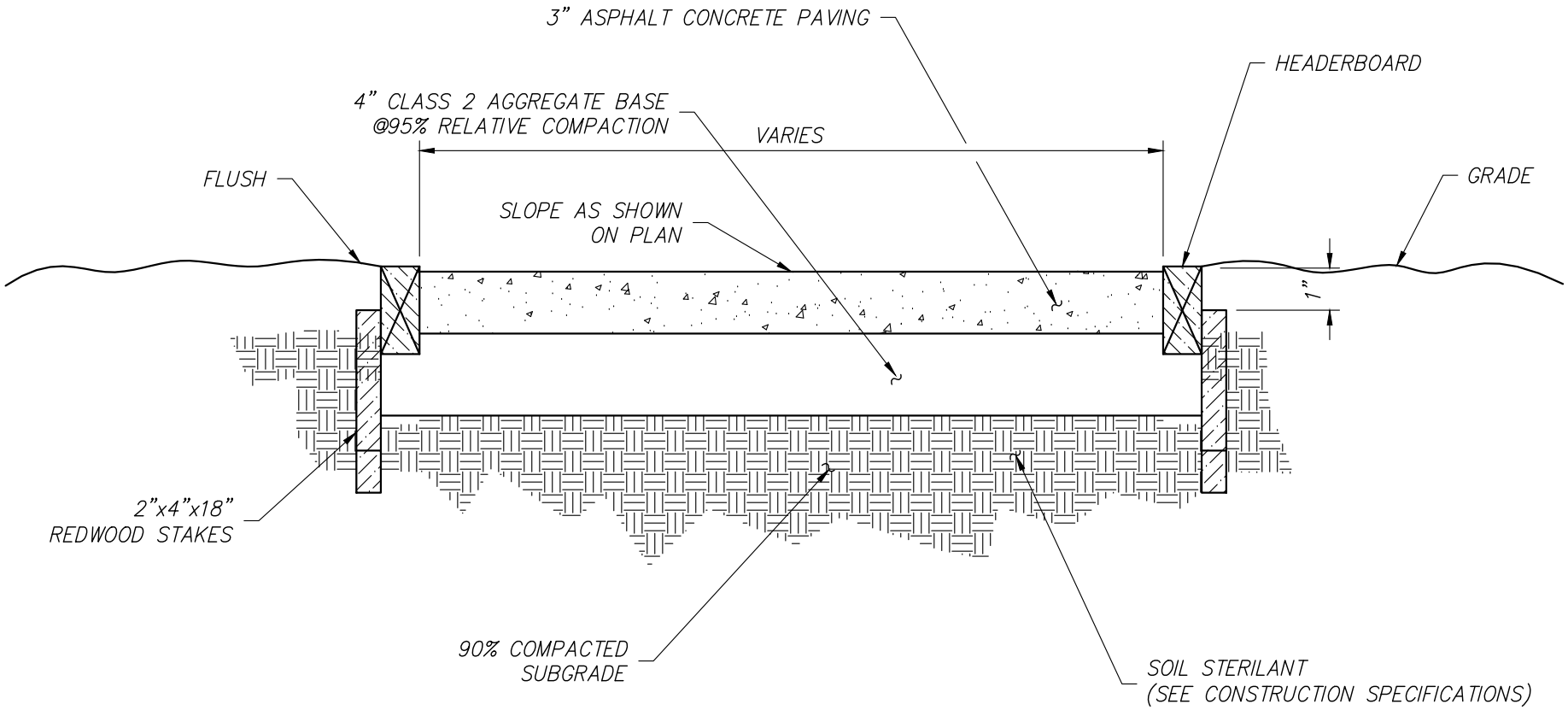

HEADER BOARD SHALL BE:

1. REDWOOD, ROUGH, CONSTRUCTION HEART GRADE, IN ACCORDANCE TO CALIFORNIA REDWOOD ASSOCIATION GRADING RULES.
2. DOUGLAS FIR, ROUGH, CONSTRUCTION GRADE, PRESSURE TREATED FOR UNDERGROUND USE.
3. ALL NAILS SHALL BE GALVANIZED – 16 PENNY.

CITY OF LINCOLN
ENGINEERING DEPARTMENT

ASPHALT CONCRETE WALK

REVISIONS:	DATES:	APPROVED:
		CITY ENGINEER DATE

SCALE: NONE
DATE: SEPTEMBER 2019
DRAWN BY: C.G.

LSC-18

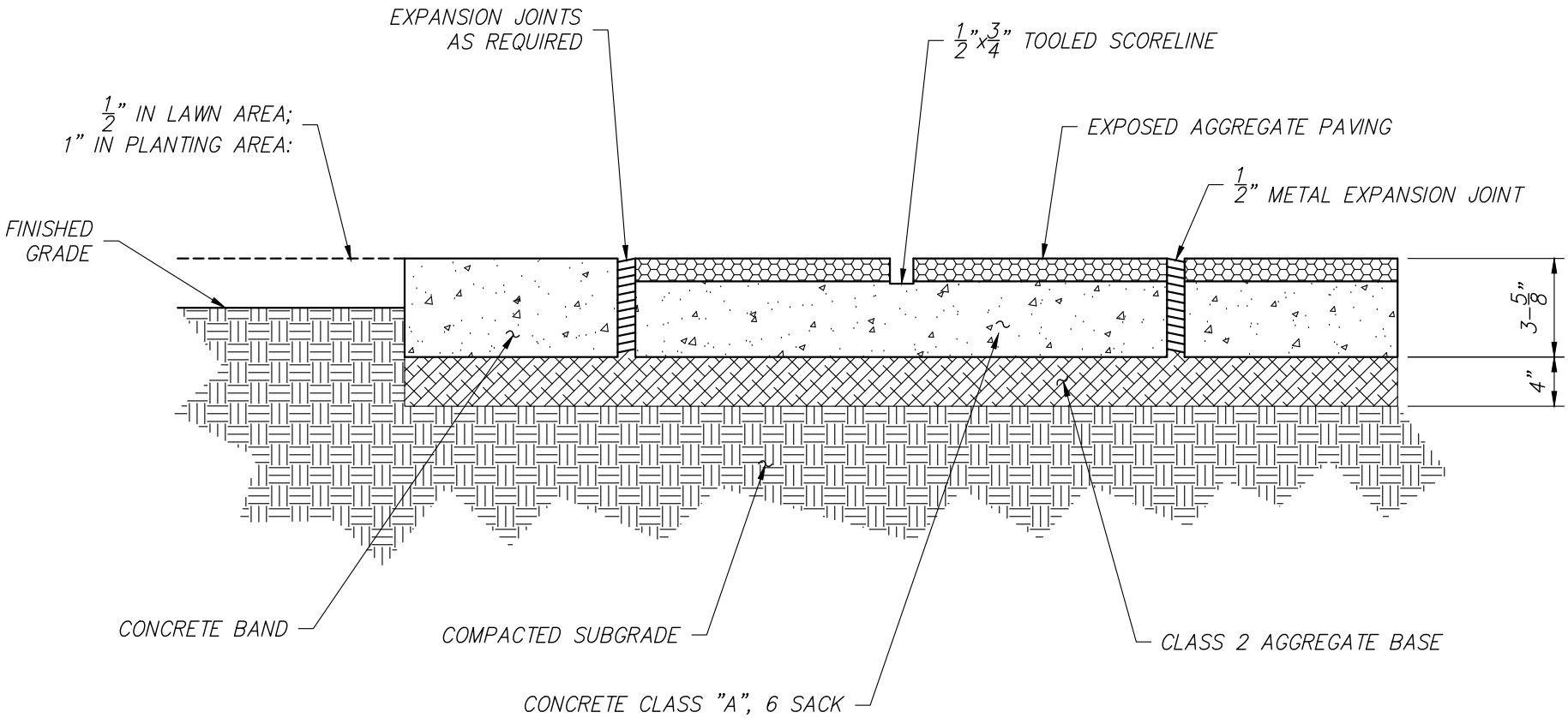

NOTES:

1. REFER TO APPROVED IMPROVEMENT PLANS FOR AGGREGATE SPECS.
2. REFER TO LAYOUT AND CONSTRUCTION PLANS AND APPROPRIATE DETAILS FOR LOCATION OF EXPANSION JOINTS AND SCORELINES.

CITY OF LINCOLN
ENGINEERING DEPARTMENT

EXPOSED AGGREGATE PAVING

REVISIONS:	DATES:	APPROVED:
		CITY ENGINEER DATE

SCALE: NONE
DATE: SEPTEMBER 2019
DRAWN BY: C.G.

LSC-19

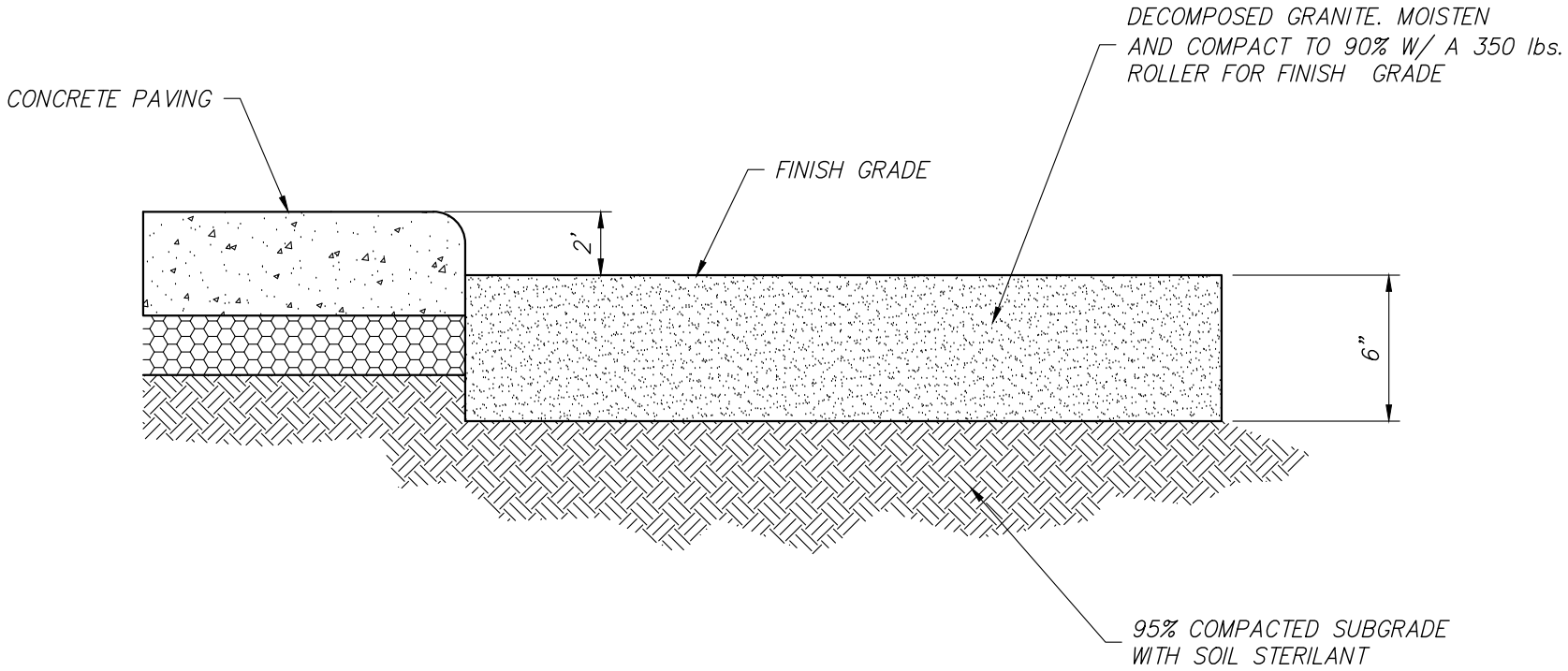

'SECTION'

CONTRACTOR TO SUBMIT SAMPLE OF LIGHT TAN DECOMPOSED GRANITE FOR APPROVAL BY CITY ENGINEER

CITY OF LINCOLN
ENGINEERING DEPARTMENT

DECOMPOSED GRANITE

REVISIONS:	DATES:	APPROVED:
		CITY ENGINEER DATE

SCALE: NONE
DATE: SEPTEMBER 2019
DRAWN BY: C.G.

LSC-20

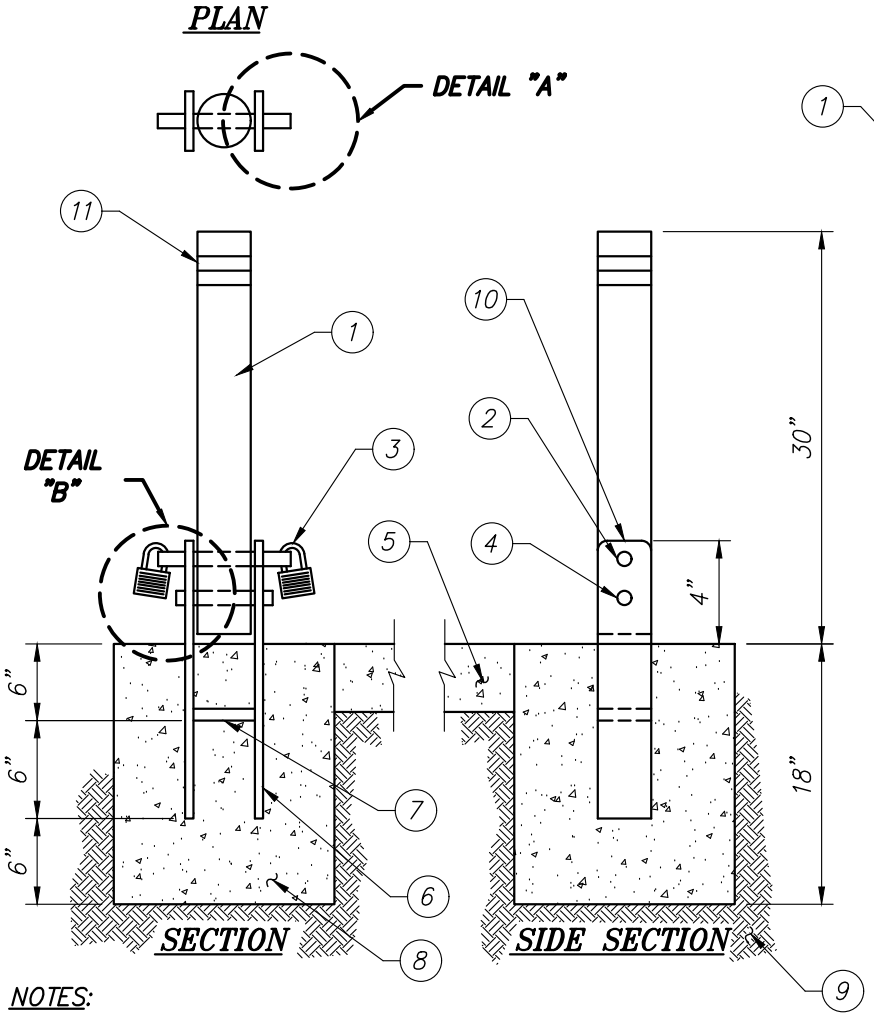

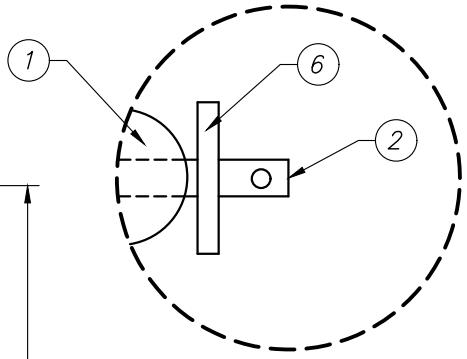

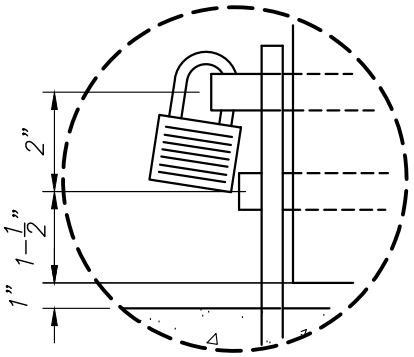

LEGEND:

1. 11 GAUGE, 2 3/4" O.D. ROUND STEEL POST WITH CAPPED TOP & 3/4" HOLES FOR SWIVEL ROD AND 9/16" HOLES FOR LOCKING PIN. EASE ALL EDGES OF STEEL POST.
2. 3/8" DIA x 6" LOCKING PIN WITH 9/16" HOLES 1/4" FROM EACH END OF PIN OR 3/4" DIA x 5" LOCKING PIN WITH WITH FLAT WASHER ON ONE END AND 9/16" HOLE 1/4" FROM END OF PIN.
3. PADLOCKS TO BE PROVIDED BY CONTRACTOR
4. 5/8" DIA STEEL SWIVEL ROD. WELD SWIVEL ROD TO SIDE PLATES – NO WASHERS.
5. CONCRETE PAVING / ASPHALT. HOLD CONCRETE 2" BELOW FINISHED GRADE. BLACK TOP REST.
6. 3/8" x 16" x 4" STEEL BASE PLATE WITH 1" RADIUS CORNERS. EASE ALL EDGES.
7. 3/8" STEEL BRACE. FILET WELD BOTH SIDES TO BASE PLATES.
8. 2" ROUND CONCRETE x 18" DEEP FOOTING.
9. COMPACTED SUBGRADE.
10. 1" RADIUS CORNERS, TYP.
11. 1" RED DIAMOND REFLECTIVE TAPE.

NOTES:

1. ALL PIPE SHALL BE BLACK STEEL PIPE.
2. ALL JOINTS SHALL BE WELDED IN ACCORDANCE W/ CA STATE STANDARD SPECIFICATIONS FOR WELDING STRUCTURAL STEEL.
3. ALL PARTS (EXCEPT PADLOCK) SHALL BE PAINTED W/ 2 COATS OF ZINC CHROMATE PRIMER AND 2 COATS OF EXTERIOR ENAMEL. COLOR: YELLOW PER CITY STANDARD.
4. BOLLARD SHALL BE INSTALLED SUCH THAT WHEN FOLDED IT LAYS FLAT.

CITY OF LINCOLN
ENGINEERING DEPARTMENT

COLLAPSIBLE BOLLARD

REVISIONS:	DATES:	APPROVED:
		CITY ENGINEER DATE

SCALE: NONE
DATE: SEPTEMBER 2019
DRAWN BY: C.G.

LSC-21

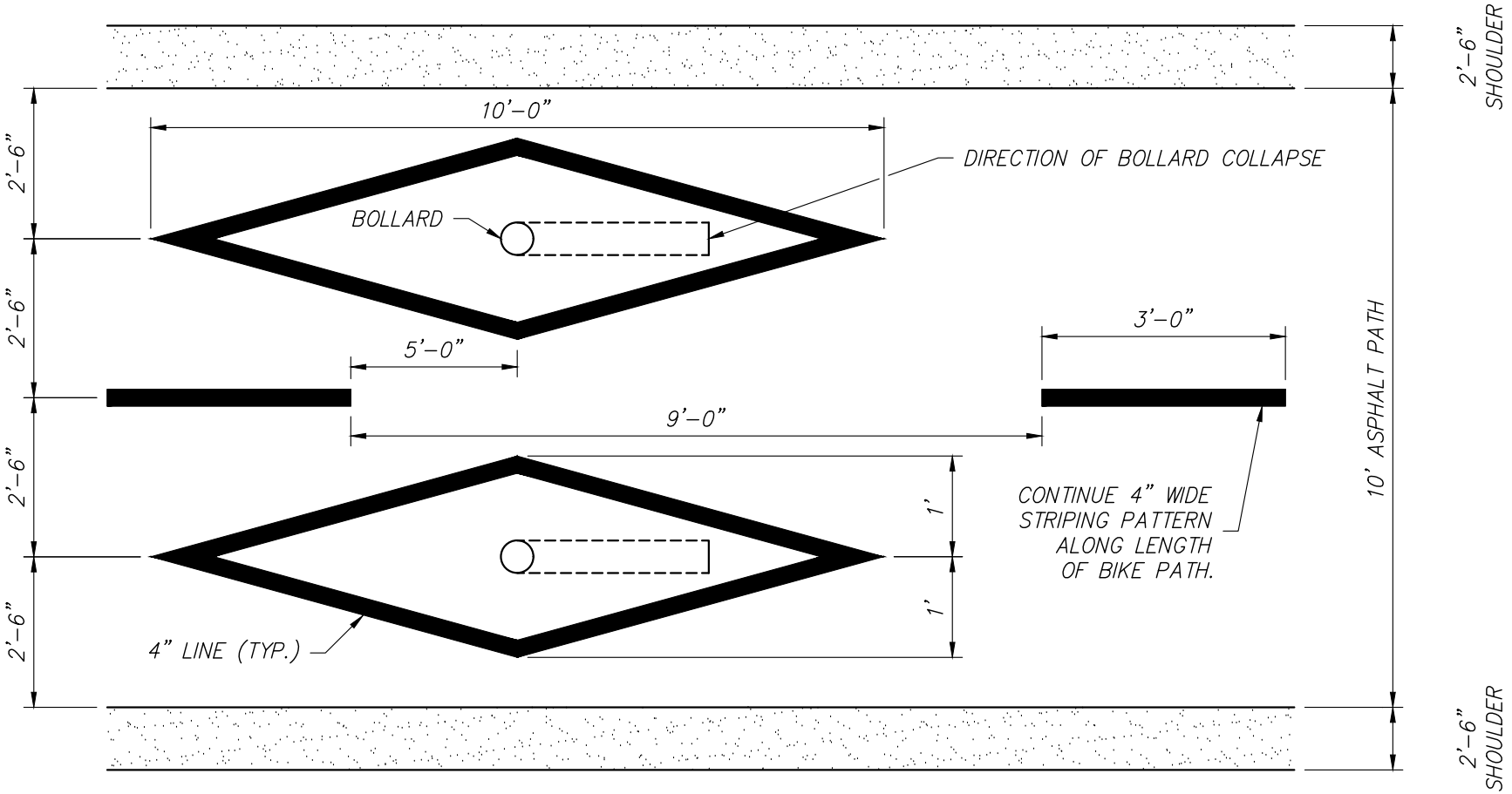

NOTES:

1. STRIPING SHALL CONFORM W/ CALTRANS STANDARD PLANS
2. STRIPING TO BE YELLOW.

CITY OF LINCOLN
ENGINEERING DEPARTMENT

BIKE PATH STRIPING/ BOLLARD INSTALLATION

REVISIONS:	DATES:	APPROVED:
		CITY ENGINEER DATE

SCALE: NONE
DATE: SEPTEMBER 2019
DRAWN BY: C.G.

LSC-22

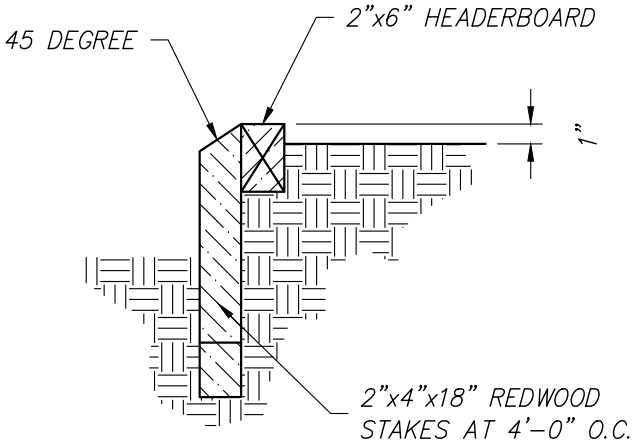

SECTION

TOP VIEW

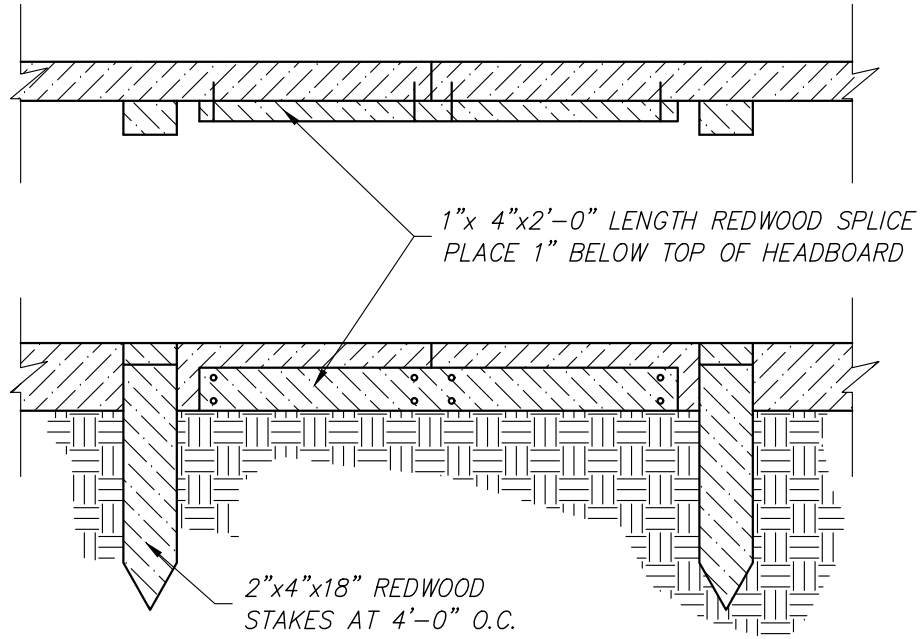

SPLICE DETAIL

NOTES:

1. USE TWO 1"x6" REDWOOD ON ALL CURVES (WHERE NECESSARY).
2. INSTALL ALL STAKES AND SPLICES ON PLANTING SIDE OF HEADER BOARD.
3. ALL NAILS SHALL BE GALVANIZED.
4. ALL LUMBER SHALL BE REDWOOD, ROUGH CONSTRUCTION HEART GRADE IN ACCORDANCE TO CALIFORNIA REDWOOD ASSOCIATION GRADING RULES.

CITY OF LINCOLN
ENGINEERING DEPARTMENT

REDWOOD HEADERBOARD

REVISIONS:	DATES:	APPROVED:
		CITY ENGINEER DATE

SCALE: NONE
DATE: SEPTEMBER 2019
DRAWN BY: C.G.

LSC-23

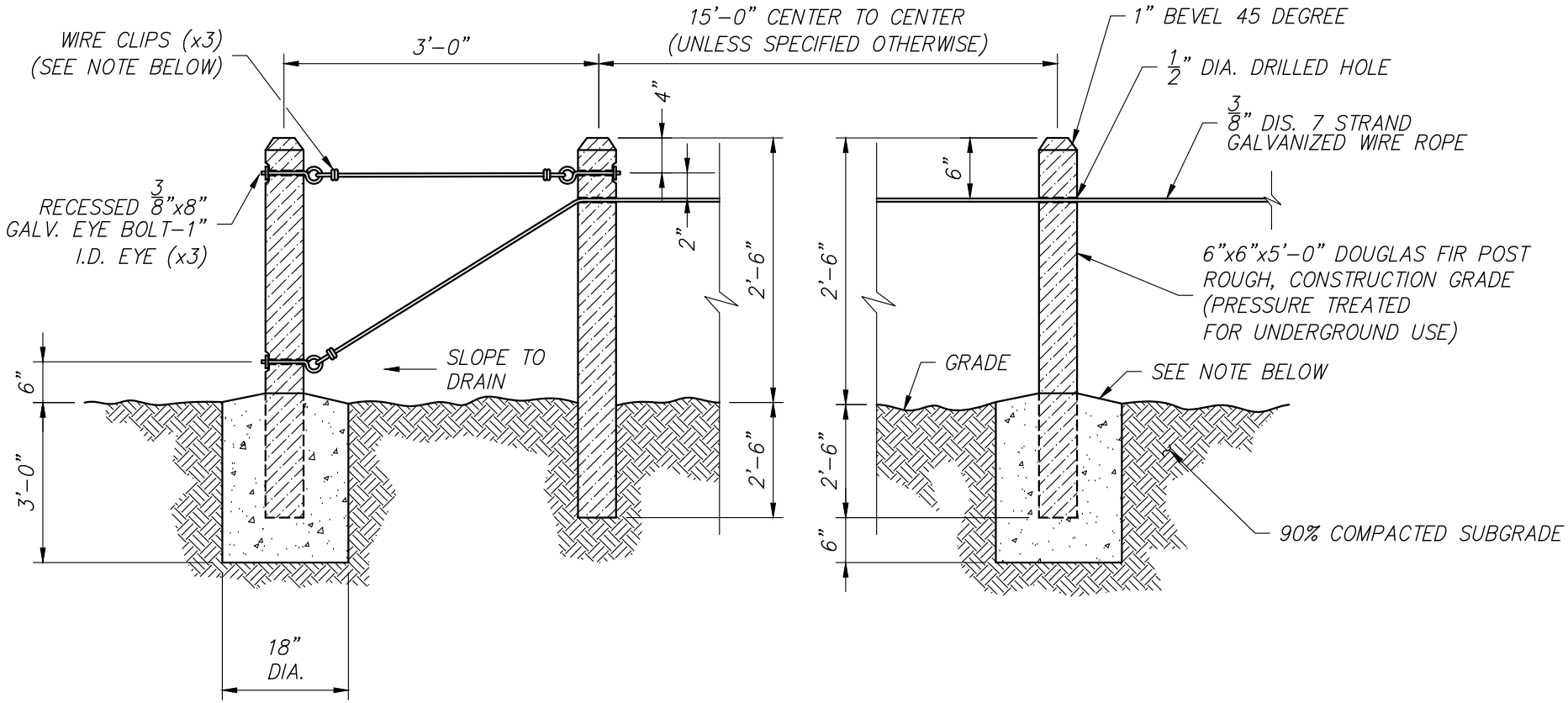

TERMINAL POST ANCHOR DETAIL

LINE POST DETAIL

NOTES:

1. *PROVIDE CONCRETE FOOTINGS AT ALL END POSTS, AT ALL BENDS AND AS SPECIFIED ON APPROVED PLANS.*

2. *USE 3/8"x 2" GALVANIZED WIRE ROPE CLIPS FOR CONNECTION AND SPLICES. ALL CLIPS SHALL BE PLACED WITH NUTS FACING DOWNWARD.*

CITY OF LINCOLN
ENGINEERING DEPARTMENT

POST & CABLE

REVISIONS:	DATES:	APPROVED:
		CITY ENGINEER DATE

SCALE: NONE
DATE: SEPTEMBER 2019
DRAWN BY: C.G.

LSC-24

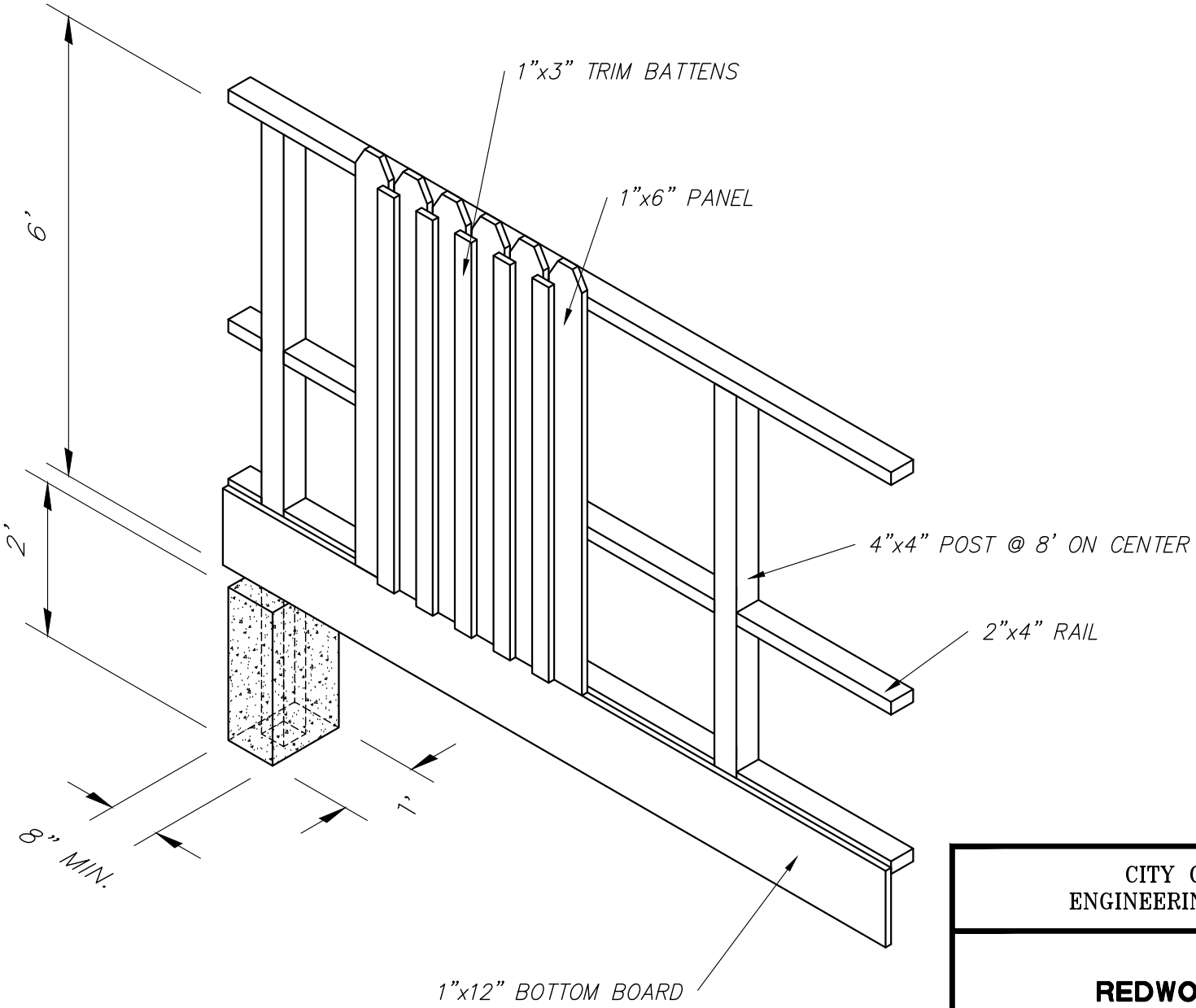

CITY OF LINCOLN
ENGINEERING DEPARTMENT

REDWOOD FENCE

REVISIONS:	DATES:	APPROVED:
		CITY ENGINEER DATE

SCALE: NONE
DATE: SEPTEMBER 2019
DRAWN BY: C.G.

LSC-25

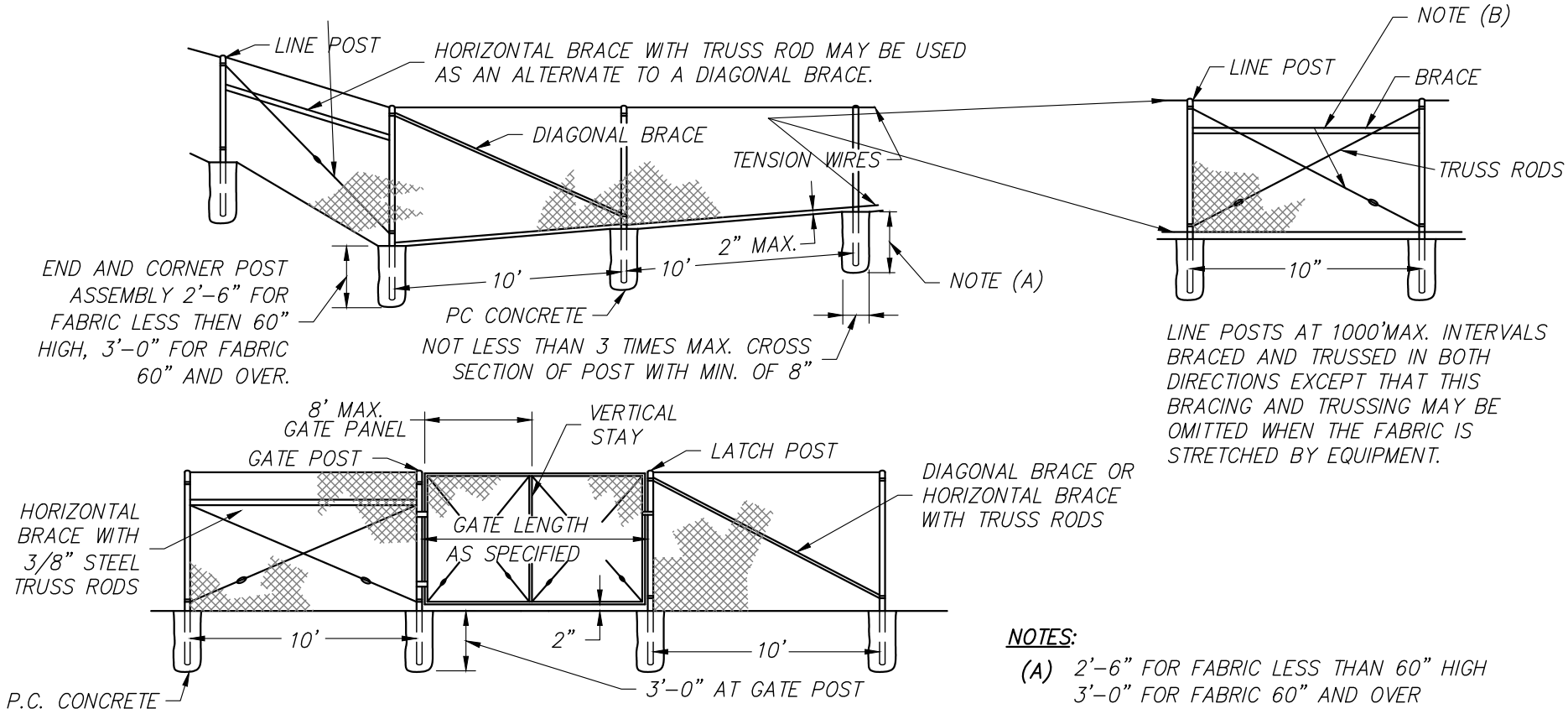

TYPE CL-4=48" FABRIC (11 GUAGE)
TYPE CL-6=72" FABRIC (9 GUAGE)

NOTES:

(A) 2'-6" FOR FABRIC LESS THAN 60" HIGH
3'-0" FOR FABRIC 60" AND OVER

(B) BRACE TO BE REMOVED AFTER ALL OTHER FENCE CONSTRUCTION IS COMPLETED UNLESS OTHERWISE DIRECTED BY THE ENGINEER.

NOTES:

1. THE ABOVE TABLE SHOWS EXAMPLES OF POST AND BRACE SECTIONS WHICH MAY COMPLY WITH THE SPECIFICATIONS.
2. SECTIONS SHOWN IN THE TABLES MUST ALSO COMPLY WITH THE STRENGTH REQUIREMENTS AND OTHER PROVISIONS OF THE SPECIFICATIONS.
3. OTHER SECTIONS WHICH COMPLY WITH THE STRENGTH REQUIREMENTS AND OTHER PROVISIONS OF THE SPECIFICATIONS MAY BE USED ON APPROVAL OF THE CITY ENGINEER.
4. OPTIONS EXERCISED SHALL BE UNIFORM ON ANY ONE PROJECT.
5. DIMENSIONS SHOWN ARE NOMINAL.
6. TYPICAL MEMBER DIMENSIONS AND GATE POST TABLES DETAIL (LSC-27A).

CITY OF LINCOLN
ENGINEERING DEPARTMENT

CHAIN LINK FENCE
DETAIL ONE

REVISIONS:	DATES:	APPROVED:
		CITY ENGINEER DATE

SCALE: NONE
DATE: SEPTEMBER 2019
DRAWN BY: C.G.

LSC-26

TYPICAL MEMBER DIMENSIONS

FENCH HEIGHT	LINE POSTS			END,LATCH & CORNER POSTS			BRACES			
	ROUND (I.D.)	H	ROLL FORMED	ROUND (I.D.)	ROLL FORMED		ROUND (I.D.)	H	ROLL FORMED	
					⊔	⊓ ⊓			⊔	⊓
LESS THEN 6'	1-1/2"	1-7/8"x1-5/8"	1-3/4"x1-3/4"	2"	3-1/2"x3-1/2"	2"x1-3/4"	1-1/4"	1-1/2"x1-5/16"	1-5/8"x1-1/4"	1-3/4"x1-1/4"
OVER 6'	2"	2-1/4"x2"	2"x1-3/4"	2"x2-1/2"	3-1/2"x3-1/2"	2"x1-3/4"	1-1/4"	1-1/2"x1-5/16"	1-5/8"x1-1/4"	1-3/4"x1-1/4"

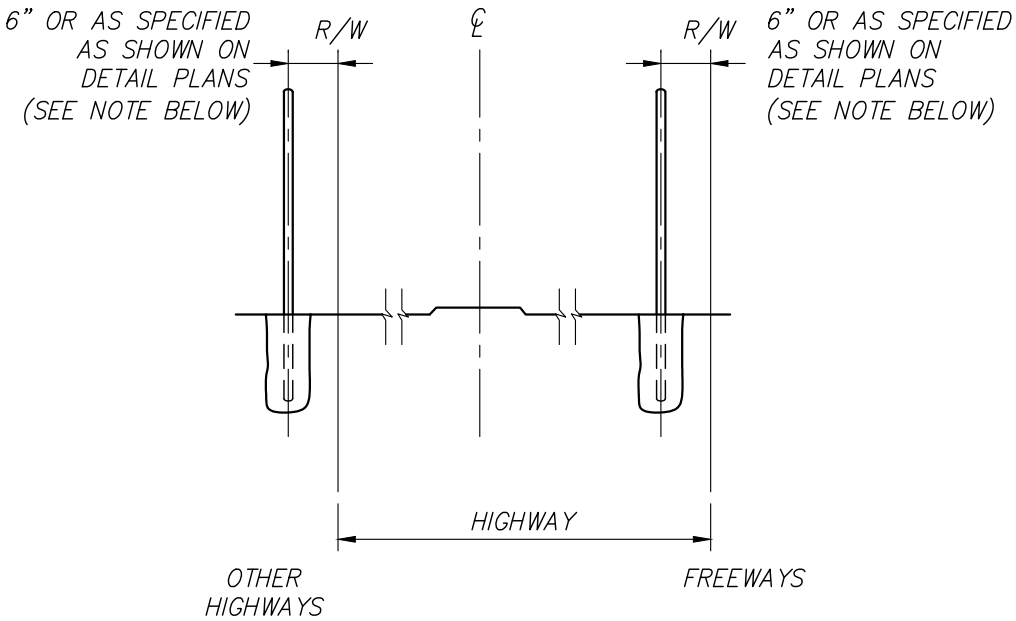

NOTE: OFFSET TO BE 2'-0" AT MONUMENT LOCATIONS, MEASURED AT RT. ANGLE TO R/W LINES. TAPER TO ACHIEVE OFFSET TO BE AT LEAST 20' LONG.

GATE POST

FENCE HEIGHT	GATE WIDTHS	NOMINAL I.D.	WEIGHT PER FOOT
6'-0" AND LESS	UP THRU 6'	2-1/2"	4.95
	OVER 6' THRU 12'	4"	10.79
	OVER 12' THRU 18'	5"	14.62
	OVER 18' TO 24' MAX.	6"	18.97
OVER 6'	UP THRU 6'	3"	7.58
	OVER 6' THRU 12'	5"	14.62
	OVER 12' THRU 18'	6"	18.97
	OVER 18' TO 24' MAX.	8"	28.55

NOTE: ABOVE POST DIMENSIONS AND WEIGHTS ARE MINIMUMS LARGER SIZES MAY BE USED ON APPROVAL OF ENGINEER.

CITY OF LINCOLN
ENGINEERING DEPARTMENT

CHAIN LINK FENCE DETAIL TWO

REVISIONS:	DATES:	APPROVED:
		CITY ENGINEER DATE

SCALE: NONE
DATE: SEPTEMBER 2019
DRAWN BY: C.G.

LSC-27

[THIS PAGE INTENTIONALLY LEFT BLANK]

SECTION 9

STREET LIGHTING, SIGNALS AND ELECTRICAL SYSTEMS (SL)

9-1 General SL-1
9-2 Traffic Signals SL-1
9-3 Maintaining Existing and Temporary Electrical Systems SL-1
9-4 Foundations SL-2
9-5 Standards, Steel Pedestals and Posts SL-2
9-6 Conduit Material SL-2
9-7 Conduit Installation SL-2
9-8 Pull Boxes SL-2
9-9 Conductors SL-3
9-10 Bonding and Grounding SL-3
9-11 Testing SL-4
9-12 Ground SL-4
9-13 Functional Testing SL-4
9-14 Emergency Vehicle Preemption Equipment SL-4
9-15 Vehicle Signal Faces SL-4
9-16 Signal Sections SL-5
9-17 Vehicle Detectors SL-5
9-18 Pedestrian Push Button Assemblies SL-6
9-19 Light Emitting Diode (LED) Luminaires SL-7
9-20 Removing Electrical Equipment SL-7
9-21 Battery Backup System SL-7
9-22 Street Lighting SL-8
9-23 Conduit Installation SL-8
9-24 Luminaires SL-8
9-25 Service SL-9
9-26 Pull Boxes SL-9
9-27 Conductors SL-9
9-28 Photoelectric Conduits SL-10
9-29 Conduit SL-10
9-30 Electrical Equipment and Work SL-10
9-31 Foundations SL-10
9-32 Poles SL-10
A. Galvanized Steel Poles SL-10
B. Aluminum Poles/Concrete Poles SL-10
9-33 Wiring SL-10
9-34 Fuses SL-11
9-35 Service SL-11
9-36 Painting SL-11
9-37 Cleanup SL-12
9-38 Acceptance Test SL-12
9-39 Street Lighting Details SL-13

PENDING FINAL REVIEW

[THIS PAGE INTENTIONALLY LEFT BLANK]

SECTION 9
STREET LIGHTING, SIGNALS AND ELECTRICAL SYSTEMS (SL)

9-1 **GENERAL** - All improvements within the City of Lincoln will be approved and permitted by the City, and will conform to the City of Lincoln Design Criteria & Procedures Manual. Street lighting, traffic signals and electrical systems will be installed in strict accord with the approved project improvement plans, these Public Facilities Improvement Standards, Caltrans Standard Plans and Standard Specifications, and as recommended by the material manufacturer.

Should conflicts arise between documents, the approved project improvement plans will govern over these Public Facilities Improvement Standards, these Public Facilities Improvement Standards will govern over the Caltrans Standard Specifications. In the event of conflict between applicable documents and/or plans, the most restrictive will prevail.

The manufacturer's guidelines for all materials to be used on the project will be present on the construction site always.

Developers/Contractors will comply with all applicable City, County, State, and Federal laws and regulations relating to construction of the improvements as required.

If the City Engineer determines that any work on private or public property constitutes a hazard to the health, safety, or welfare of the public; endangers property; adversely affects the safety, use or stability of adjacent property; an overhead or underground utility, or a public way, watercourse or drainage channel; or could adversely affect the air quality; or the water quality of any water bodies or water courses; the City Engineer may issue a stop work notice to the owner of the property upon which the condition is located, or other person or agent in control of such property. Upon receipt of such stop work notice, the recipient will, within the period specified therein, stop all work, obtain any necessary permits and conform to the requirements identified in the stop work notice. The City Engineer may require the submission of plans or other reports, detailed construction recommendations, studies, or other engineering data prior to and about any corrective or proposed work or activity.

Street trees shall be placed as follows: No street trees are allowed within 25 ft of street lights on arterial, collector or commercial streets. No street trees within 15 ft of street name, stop or yield signs at curb returns and intersections on residential streets. Distance shall be measured from center of trunk to center of sign post or street light pole. Refer to Section 8 of the City Improvement Standards for additional information.

All improvements within the City of Lincoln will be performed by a contractor licensed in accordance with the California Contractors State License Law, Business and Professions Code Section 7000 et seq.

All persons, firms, partnerships, or corporations doing business of any nature in the City of Lincoln will have a current Business License as stated in Chapter 5.04-License Tax, City of Lincoln Municipal Code. This includes developers, engineers, and contractors.

PENDING FINAL REVIEW

Refer to the City of Lincoln's Design Criteria & Procedures Manual for design information.

9-2 **TRAFFIC SIGNALS** - Sections 9-3 through section 9-20 apply to traffic signal installations.

9-3 **MAINTAINING EXISTING & TEMPORARY ELECTRICAL SYSTEMS** - Roadway closures requiring restrictions of turning movements and/or signal red flash operations at signalized intersections will not be allowed without the written consent of the City Engineer.

9-4 **FOUNDATIONS** - Placement (location) of all traffic signal foundations will be verified by the City Engineer prior to installation.

Signal pole anchor bolts will be aligned to ensure a maximum mast arm offset of 2-degrees from perpendicular to the roadway.

9-5 **STANDARDS, STEEL PEDESTAL AND POSTS** - Install signal heads with 4 or more sections on display using these criteria:

1. 4-section display will be SV-1-T or SV-2-T mounted and the pole will be 13-feet in height. A PVC cap will be provided as a pole cap.

2. 5-section display will be SV-1-T or SV-2-T mounted and the pole will be 14-feet in height. A PVC cap will be provided as a pole cap.

3. Field welding will not be permitted without the permission of the City Engineer. Only persons certified by the pole manufacturer will perform any welding on traffic signal or lighting poles in the City's right of way.

9-6 **CONDUIT MATERIAL** - All conduits will be gray PVC, schedule 40 (min.). All conduits will be at least 2-inches and no more than 3-inches in diameter.

9-7 **CONDUIT INSTALLATION** - All trenches in existing streets will be constructed in accordance with these standards:

All new conduits placed in the roadway, except for the conduit between the detector hand hole and the first pull box, will be buried at a depth of 30-inches below finish grade or 18-inches below finished sub grade.

Unless otherwise specified, all signal interconnect will be installed using 2-inch conduit with 2-foot radius, 90 degree sweeps into No. 6 pull boxes. The bell end of the sweep will be in the pull box.

After conductors, have been installed, the ends of the conduit will be sealed with a duct seal type of sealing compound.

The trench will be a maximum of 6-inches wide and 2-inches wider than the outside diameter of the conduit to be installed. There will be a minimum of 1-inch clearance between the conduit and the trench wall.

PENDING FINAL REVIEW

The trench will be backfilled with Class 2 aggregate base, or controlled density fill (see Section 3-9 for details).

9-8 **PULL BOXES** - Pull boxes will not be placed in a handicap ramp area. The bottom of pull boxes will be bedded in 6-inches of clean crushed rock. The pull box rim will be 1-inch above finish grade in unpaved areas.

Conduit termination in the pull box will be a minimum of 2-inches from the sides of the box, 2-inches above the crushed rock, and at least 8-inches below the bottom of the pull box cover. Conduit will enter and exit the pull box quadrants relative to the direction of the run.

Unless otherwise noted, all pull boxes will be sized to a minimum of No. 5.

Pull box covers will read "TRAFFIC SIGNAL" except pull boxes used solely for traffic signal interconnect which will read "SIGNAL INTERCONNECT".

All pull boxes to be abandoned will be removed and the hole backfilled and compacted with similar material as the surrounding material.

9-9 **CONDUCTORS** - Conductor installation in new conduits will be limited to 26% fill of the conduit maximum area. Conductors installed in existing conduits will be limited to 33% fill of the maximum area.

Equipment grounding conductor will be No. 8 jacketed copper.

Conductors will be identified and marked at each terminal point or as directed by the City Engineer. Conductor for each vehicle and pedestrian phase will be bundled together and banded with plastic tie-wrap labels in all pull boxes and controller cabinet.

Multiple circuit conductors are not permitted.

Signal interconnect cable will consist of six pairs, No. 20 stranded copper conductors. Each pair will be wrapped with an aluminum polyester shield. No splicing of signal interconnect cable is allowed.

Six feet of slack of signal interconnect cable will be provided at each pull box. Fifty feet of slack will be provided in the home run pull box.

Ends of spare conductors will be taped and water sealed with Scotch Kite or approved equal.

Field conductor wiring will not be doubled up on any single wire connector. For conductor wire sizes, larger than No. 10, connections will be spliced using “c” shaped compression connectors as shown in the Caltrans Standard Plans.

9-10 **BONDING AND GROUNDING** - Grounding jumper will be attached by 3/8-inch or larger galvanized bolt in the signal standard or controller pedestal and will be run to the conduit, ground rod or bonding wire in adjacent pull box. Grounding jumper will be visible after cap has been placed on foundation. All ground connections will be watertight.

PENDING FINAL REVIEW

Grounding electrodes will be of copper clad steel rod, not less than 5/8-inch in diameter and 8-feet in length.

A grounding electrode will be installed in all electrical services and controller foundations. They will be spaced a minimum of 6-feet apart.

The grounding electrode rod in the controller assembly will be paralleled with the grounding electrode rod in the service. This connection will consist of a continuous solid No. 6 jacketed conductor. The ground connection will be on the line side of the electrical entrance terminal block.

A continuous No. 6 jacketed copper conductor will connect the ground bus in the electrical service, the grounding electrode in the service, the grounding electrode in the controller, and the ground entrance lug in the controller cabinet.

The equipment-bonding conductor for all standards will be visible and accessible after completion of work.

9-11 **TESTING** - The contractor will contact the City Engineer at least five business days prior to installation of a tested controller assembly and/or electrical service.

9-12 **GROUND** - Before electrical power can be connected, the grounding electrode will be tested for earth ground resistance. The City Engineer will observe this ground resistance testing. The earth ground resistance will be a maximum of 5-ohms.

9-13 **FUNCTIONAL TESTING** - During interconnect cable installation, the Contractor will, in the presence of the City Engineer, perform a high resistance to ground test, DC resistance test and a dB attenuation loss test. The Contractor will supply factory specifications prior to the test. The Contractor will notify the Engineer at least 48-hours prior to interconnect cable installation.

Power interruption and/or damage caused by the public which causes a shutdown to the electrical system will not constitute a discontinuous functional test.

9-14 **EMERGENCY VEHICLE PREEMPTION EQUIPMENT** - The Contractor will supply emergency vehicle preemption equipment, including the required cabling from the optical detector to the discriminator in the controller cabinet assembly.

Where existing signals are being modified, and said signals are already equipped with emergency vehicle preemption equipment, the Contractor will perform any necessary remodel and reinstallation of said equipment as required by the plans or as directed by the City Engineer.

Preemption cables will be labeled in the following manner:

Phase 2 & 5 single gray band
Phase 4 & 7 double gray band
Phase 1 & 6 triple gray band
Phase 3 & 8 quadruple gray band

PENDING FINAL REVIEW

Labels will consist of banded colored tape visible at the preemption detector, signal standard hand hole, adjacent pull box and the controller cabinet. Cables in the Controller Cabinet will have tie wrap labels with appropriate phasing descriptions.

9-15 **VEHICLE SIGNAL FACES** - All signal faces will be aluminum. Mountings for MAT and MAS signal sections will be bronze metal. Signal faces will have 12-inch LED displays, unless otherwise specified.

9-16 **SIGNAL SECTIONS** - All signal sections will be 12-inch mold-cast aluminum.

All vehicle signal sections will include aluminum back plates with perforated louvers.

Pedestrian signals will be aluminum Type "A" with international symbols. Pedestrian head mounts will be clam shell type with bronze mounting hardware. Mounting will include one Allen head screw for opening and all wiring will be quick connect type (plug in).

Pedestrian heads will be mounted on the intersection side of the signal pole unless otherwise directed by the City Engineer.

Terminal compartments (TV & SV) and mast arm slip fitters (MAS & MAT) will be bronze.

Signal mast arm mounted, four (4) section displays will be type MAS-4C.

Extra support will be incorporated whenever the use of a SV-3-TA, SV-3-TB display or if any display on a side mount is larger than a 3-section 12-inch display.

The extra support method will consist of a 1-inch stand-off with 1-1/4-inch x 20 threaded hole. The stand-off will be banded to the signal standard, 3-inchs below the bottom of the top slip fitting of the display's 1-1/2-inch riser. A ¼-inch hole will be drilled in the center of the 1-1/2-inch riser to match the position of the thread hole on the stand-off. The riser will be attached to the standoff with a 1/4-inch x 20 bolt, which will include a lock washer and flat washer.

All signal display mounting assembly top members will be watertight. The watertight sealing method will be a ½-inch thick layer of clear silicone around the top jointing member of all displays. Additional sealant will be installed in the same manner on all plugs installed in the top of any signal display. Rubber washers used for water-sealing the top assembly will not be permitted on any display framework or MAT mounting.

All MAT mounted signal displays will have only one serrated washer installed between the lock nut and the display.

Seal all MAT and MAS mounts will be sealed with approved clear silicone around the tenon attachment area, including the through bolt and tenon openings.

The sealant will be 35-year rated. There will be no substitution for the silicone sealant.

A terminal compartment will be installed on the signal pole at the vehicle display position, when no display is to be installed on that side of pole. All signal display wiring from the signal mast arm will terminate at this location.

PENDING FINAL REVIEW

9-17 **VEHICLE DETECTORS** - The first detector at the limit line will be inductive loop detector Type "Q." All other vehicle detectors will be inductive loop detector Type "A."

Loop wire will be Type 1, RHW-USE, neoprene-jacketed, cross-linked polyethylene insulated, and No. 12 stranded copper.

Lead-in cable will be Type B copper. Tinned copper will not be permitted.

Vehicle detector hand holes will be Type ”B".

Exclusive right tum loops will be type "A" loops.

The City Engineer will verify all loop locations prior to saw cutting. The contractor will give 48-hours’ notice prior to loop verification.

Loop wires will be labeled in the following manner:

Lane 1 -	black
Lane 2 -	red
Lane 3 -	blue
Lane 4 -	white
Lane 5 -	yellow
Right turn lane -	orange

1. Labels will consist of banded colored tape visible in the pull boxes, where the loop wire is spliced to the detector lead-in cable.

2. Loop detectors will be clearly marked to reference their location in relation to the limit lines and lane. The loop closest to the crosswalk in the left most lane will be labeled as loop number 1-1. The second loop in the same lane will be labeled 1-2, and so on.

3. The start and end leads of a loop detector will be clearly marked by a means of plastic tie wrap labels.

During loop installation, the Contractor will, in the presence of the City Engineer, perform a high resistance test and an inductive reactance test. The contractor will notify the City Engineer at least 48-hours prior to loop installation.

All wires for each detector loop will terminate in the nearest pull box, not the hand hole.

Lead-in cables will not be spliced between the termination point (the pull box adjacent to loop detectors) and the controller cabinet terminals.

Adjacent loops on the same sensor unit channel will be wound in opposite directions. All loops will be wound in a manner such that any adjacent loop will be wound in the opposite direction. The loop at the limit line, closest to the center median (lane 1), will be wound in a clockwise direction. The next loop back in the same lane will be wound in a counter-clockwise direction and so on. The loop detector in lane 2 closest to the limit line, will be wound in a counterclockwise direction.

PENDING FINAL REVIEW

9-18 **PEDESTRIAN PUSH BUTTON ASSEMBLIES** - Pedestrian push buttons will be aluminum type with metal international symbol signs. Push buttons will meet all Americans with Disabilities Act (ADA) guidelines and be placed 42-inches above the grade of the closest edge of sidewalk. The push button will be mounted parallel to the crosswalk direction it serves. The assembly will also provide a two-tone audible confirmation in addition to the visual countdown confirmation. Refer to the Caltrans Division of Construction Permanent Pedestrian Facilities ADA Handbook.

9-19 **LIGHT EMITTING DIODE (LED) LUMINAIRES** - Unless otherwise noted, all luminaries at signalized intersections will be Light Emitting Diode (LED) Luminaires and will comply with Caltrans Standard Specification Section 86.

9-20 **REMOVING ELECTRICAL EQUIPMENT** - All existing traffic control devices, lighting devices, signs, and equipment to be removed and not reused in the work will be salvaged, unless otherwise specified or directed by the City Engineer. Salvageable equipment will remain the property of the City. Equipment determined to be unsalvageable by the City Engineer will become the property of the Contractor. The Contractor will deliver salvaged equipment to the City's Corporation Yard or other location determined by the City Engineer.

Damaged conduits deemed to not be reusable will be removed from existing pull boxes and ends plugged solid with grout. Existing conductors will be removed from said conduits prior to plugging. Contractor will dispose of said conductors.

Conduits abandoned for reuse will have all conductors removed, the conduit blown out, and installation of a No. 10 green locator wire prior to sealing and capping the conduit.

9-21 **BATTERY BACKUP SYSTEM** – Unless otherwise specified, all traffic signals will be equipped with a battery backup system and will conform to Caltrans Transportation Electrical Equipment Specifications (TEES) Chapter 4 – Battery Backup System, latest edition. The battery backup system will include an inverter/charger, power transfer relay, manually operated non-electric bypass switch, and all necessary hardware and interconnect wiring.

9-22 **STREET LIGHTING** - Sections 9-23 through section 9-38 apply to street lighting installations.

9-23 **CONDUIT INSTALLATION** - All trenching for street lighting conduits in existing streets will be constructed in accordance with these standards:

All new conduit placed in the roadway will be buried at a depth of 30-inches below finish grade or 18-inches below finished sub grade.

After conductors, have been installed, the ends of the conduit will be sealed with a duct seal type of sealing compound. The trench will be a maximum of 6-inches wide and 2-inches wider than the outside diameter of the conduit to be installed.

There will be a minimum of 1-inch clearance between the conduit and the trench wall.

PENDING FINAL REVIEW

The trench will be backfilled and compacted with Class 2 aggregate base, concrete slurry or Class B concrete.

9-24 **LUMINAIRES** - The type of street light and the appropriate wattage will be specified on the plans. The luminaires will be Light Emitting Diode (LED) type with internal ballasts.

Unless otherwise specified, luminaries will be installed per the tables below:

Street Classification	Type Street Light	Normal Mounting Height	LED Wattage [a]	Spacing (One side only)[b]
Minor Residential	B	14'	40	125
Primary Residential	B	14'	40	125
Collector	A	30'	60	[e]
Industrial/Commercial	A	30'	73	[e]
Minor Arterial	A	30'	60	[e]
Major Arterial	A	30'	60	[e]
Special Thoroughfare	A	30'	73	[e]

Street Classification	Avg. Maintained Foot Candles [c,d]	Avg.:Min ratio (Commercial)	Avg.:Min ratio (Residential)
Minor Residential	0.15		
Primary Residential	0.15		
Collector	0.26	4:1	5:1
Industrial/Commercial	0.26	4:1	
Minor Arterial	0.35	4:1	5:1
Major Arterial	0.56	4:1	
Special Thoroughfare	0.56	4:1	

a. Lamp wattage is for LED only. Design criteria must be submitted for all other lamps.
b. Spacing may be adjusted by ± 20% to accommodate driveways and intersections.
c. Lumens used to calculate the average maintained foot-candle will be based on a 0.8 maintenance factor of initial lumen value as rated by the lamp manufacturer.
d. Light distribution pattern will be Type III with house side of shield unless otherwise specified.
e. Light spacing shall be determined by photometric diagram.

9-25 **SERVICE** - All street light systems will have underground service provided. Service points will be provided within a utility easement immediately adjacent to or within the right-of-way and will be open and easily accessible to the street frontage. Types of service are as follows:

1. A direct underground service consists of one or two lights being served from a single service point. The service point may be in the form of a service pedestal provided by the developer.

2. Multiple service is three or more lights being served from a single service point installed by the developer. The service point will be a pull box. Multiple systems will have a service cabinet located adjacent to the service point between the service point and the light system.

9-26 **PULL BOXES** - All pull boxes, including the size, will be shown and identified on the plans. Pull boxes will be sized to a minimum of No. 5 or No. 6 unless approved by the City Engineer or his/her designee.

Pull boxes will be installed at the following locations:

PENDING FINAL REVIEW

1. Where more than two conduit runs intersect;
2. Where conduit runs are more than 250 feet long;
3. Where shown on the Standard Details;
4. At critical angle points;
5. Behind each light when No. 4. is used;
6. Locations ordered by the City Engineer.

9-27 **CONDUCTORS** - All conductors, including quantity and size, will be identified on the plans. Unless otherwise specified, conductors will be single conductor, solid, or stranded copper, sized in accordance with these Standards and the National Electric Code.

A. On a direct underground service, the minimum conductor will be between a No. 8. and No. 4 conductor.

B. On multiple services, the minimum conductor size from the service point to the service will be No. 8 AWG. The voltage drop along each circuit will not exceed 7% for 2 wire systems and 6% for 3-wire system of the nominal service voltage to the farthest luminaire. The nominal service voltage to be used is 115 volts. Calculations will be submitted substantiating the design criteria for every circuit. Calculations will also be submitted showing the total load in amperes of each circuit at the service cabinet.

Where only one photocell is required in a multiple service system, it will be connected to the service can with three No. 14 conductors.

9-28 **PHOTOELECTRIC CONTROLS** - A single photoelectric receptacle will be provided on the luminaire nearest to the service point for multiple services containing four or more lights. All other light systems will have a photocell in each luminaire. Photocells shall have a rated life of at least 20 years (or as approved by the City Engineer).

9-29 **CONDUIT** - All conduit runs will be shown and identified on the plans, including conduit size.

For a system designed using the 3-wire principle, only 2 circuits (one set of 3 wires) are allowed in any conduit. Further circuits based on 2-wire principle and 3-wire principle will not be mixed in any conduit. All circuits may, however, be mixed in same conduit from cabinet to first pull box.

The design may include more than two circuits in a conduit if the conductors for each circuit (2-wire) or set of conduits (3-wire) are identified by conductor insulation which is a solid color or a basic color with a permanent colored stripe. The identification stripe will be continuous over the entire length of the conductor.

9-30 **ELECTRICAL EQUIPMENT AND WORK** - Control and switching equipment and fusing of all circuits will meet the requirements of the National Electrical Code, the Basic Electrical Regulations, Title 24, Part 3, of the California Administrative Code, the rules of the National Fire Protection Agency, and the City of Lincoln.

PENDING FINAL REVIEW

9-31 **FOUNDATIONS** - Foundations for poles, posts, and pedestals will conform to Section 86–6.02 of the State Specifications except as herein modified. Standard bases will conform to the sizes show on the drawings or as detailed on the plans. All concrete will be Class "A".

9-32 **POLES** - All poles will be galvanized steel or concrete. The type of standard will be as shown on the plans or in the Special Provisions.

A. Galvanized Steel Poles - Type "A" street lights will use the "A" series poles as detailed on the drawings. Galvanizing will be as provided in Section 75-1.02B, "Galvanizing", of the State Standard Specifications. Galvanized Steel Poles will only be used in Industrial Streets and/or Special Thoroughfares as determined by the City Engineer and/or Community Development Director.

B. Concrete Poles - Concrete lighting poles will conform to the American Association of State Highway and Transportation Officials (AASHTO) "Standard Specifications for Structural Supports for Highway Signs, Luminaires, and Traffic Signals", and these Standards.

9-33 **WIRING** - Wiring for street lighting will conform to Section 86 of the State Standard Specifications, except as herein modified. The use of heat shrinkable insulating tubing is not allowed. Splice insulation on 600-volt conductor splices of solid or stranded conductor of No.14 to No. 6, the Contractor may use, at his option, an electrical spring connector of three-part construction. The three-part construction will consist of a zinc coated free expanding steel spring enclosed in a shell, with an outer jacket of polyvinyl chloride. The outer jacket will have a flared skirt, be flexible, and able to withstand 105-degree centigrade temperatures continuously. Each piece must have the spring connector sized in accordance with the manufacturer's recommendations for the number of conductors and gauges being spliced. Wire strip lengths will also be in accordance with the manufacturer's recommendations. The splice will be coated (by submersion) with a corrosive-resistant, solvent-resistant, sealing/bonding, flexible electrical coating, having at least 100-volt/mil electrical strength after the spring connector has been applied to the connection. Upon coating of the splice, the flared skirt end will be positioned in an upright alignment and maintained there until the electrical coating is dry. In addition to the requirements of Section 86-1.02N, "Fused Splice Connectors", of the State Standard Specifications, the standard midget ferrule type fuse will be further interpreted as being rated at 30-amps at 600-volts.

9-34 **FUSES** - Luminaires with up to 175-watt bulbs will have 6-amps fuses installed. All fuses will be the fast blowing type.

9-35 **SERVICE** - The service will conform to the provisions of Section 87 of the State Standard Specifications, except as herein modified. The service will be a three-wire No. 5 or as shown on the plans and drawings. It will contain main breakers, auxiliary breakers, test switch, and contactor in accordance with the drawings. The contractor will supply three No. 14 conductors from the service pedestal to the photoelectric unit. The location of service points will be as shown on the plans with the concurrence and approval of the serving utility.

All components within the service box will be clearly marked with the manufacturer's name and part number with a metallic or permanently marked engraved stencil for future

PENDING FINAL REVIEW

identification. All control and switching equipment and fusing of the circuits will meet the requirements of the National Electrical Code, the Electrical Safety Orders of the Industrial Accident Commission of the State of California, the rules of the National Fire Protection Agency, and the City of Lincoln.

9-36 **PAINTING** - Painting of electrical equipment and materials will conform to the provisions in Section 59, "Structural Steel Coatings", of the State Standard Specifications, with the following additions and modifications:

A. Paint material for electrical installations, unless otherwise specified, will conform to the provisions in Section 91, "Paint", of the State Standard Specifications. Color will be Pantone Color 363.

B. In lieu of the temperature and seasonal restrictions for painting as provided in Section 59, "Structural Steel Coatings", of the State Standard Specifications, paint may be applied to equipment and materials for electrical installations at any time approved by the City Engineer.

C. All ferrous surfaces to be pained will be cleaned as provided in Section 59, "Structural Steel Coatings", of the State Standard Specifications prior to applying the vinyl wash primer or prime coat. Blast cleaning of galvanized metal surfaced in good condition, as determined by the City Engineer, will not be permitted.

D. Existing equipment to be painted in the field will be washed with a stiff bristle brush using a solution of water containing 2-tablespoonfuls of heavy-duty detergent powder per gallon. After rinsing, all surfaces higher than 8-feet above ground level will be wire brushed with a coarse, cup shaped, power driven brush to remove all poorly bonded paint, rust, scale, corrosion, grease, or dirt. Any dust or residue remaining after wire brushing will also be removed prior to priming. All surfaces between the ground level and 8-feet in height will have all paint, rust, scale, corrosion, grease, and dirt removed to bare metal.

E. Immediately after cleaning, all bare metal in corrosive atmospheres, all galvanized surfaces, and all nonferrous metal surfaces will be coated with Pre-Treatment, Vinyl Wash Primer followed by two prime coats of Zinc Chromate Primer for metal in non-corrosive atmospheres. Pre-Treatment, Vinyl Wash Primer may be omitted on bare metal surfaces and the prime coats will be applied immediately after cleaning.

F. Equipment previously finished as specified will be given a spot-finishing coat on newly primed areas, followed by a finishing coat over the entire surface.

G. All paint coats may be applied either by hand brushing or by approved spraying machine in the hands of skilled operators. The work will be done in a neat and workmanlike manner. The City Engineer reserves the right to require the use of brushes for the application of paint should the work done by the paint spraying machine prove unsatisfactory or objectionable, as determined by the City Engineer.

9-37 **CLEANUP** - During the progress of the work, the Contractor will keep the entire job site in a clean and orderly condition. Spillage resulting from hauling operations along or across existing streets or roads will be removed immediately by the contractor.

PENDING FINAL REVIEW

9-38 **ACCEPTANCE TEST** - After completion of the installation of the street lights the contractor will test all streetlights in the presence of the City Engineer. The contractor will furnish all material and equipment for such testing. The street light system will be energized for a period of one hour per circuit. The test will identify light distribution patterns; acceptability of the ballasts, fixtures, and lamps for electrical and noise standards; to verify that all connections are electrically and mechanically sufficient; and other purposes as directed by the City Engineer.

PENDING FINAL REVIEW

STREET LIGHTING DETAILS

Street Light Pole and Symbols SL-1
Foundation Location Street Lights SL-2
Street Light Service Wiring Diagram SL-3
Service Cabinet and Meter Socket Front View SL-4
Service Cabinet and Meter Socket Side View and Notes SL-5

PENDING FINAL REVIEW

[THIS PAGE INTENTIONALLY LEFT BLANK]

	STREET LIGHT TYPE	NORMAL MOUNTING HEIGHT	LED WATTAGE[a]	SPACING (ONE SIDE ONLY)[b]	AVG MAINTAINED FC[c,d]	AVG: MIN RATIO (COMMERCIAL)	AVG: MIN RATIO (RESIDENTIAL)
MINOR RESIDENTIAL	B	14'	40	125	0.15		
PRIMARY RESIDENTIAL	B	14'	40	125	0.15		
COLLECTOR	A	30'	60	e	0.26	4:1	5:1
INDUSTRIAL/COMMERCIAL	A	30'	73	e	0.26	4:1	
MINOR ARTERIAL	A	30'	60	e	0.35	4:1	5:1
MAJOR ARTERIAL	A	30'	60	e	0.56	4:1	
SPECIAL THOROUGHFARE	A	30'	73	e	0.56	4:1	

a. LAMP WATTAGE IS FOR LED ONLY. DESIGN CRITERIA MUST BE SUBMITTED FOR ALL OTHER LAMPS
b. SPACING MAY BE ADJUSTED BY ±20% TO ACCOMMODATE DRIVEWAYS AND INTERSECTIONS.
c. LUMENS USED TO CALCULATE THE AVERAGE MAINTAINED FOOT-CANDLE SHALL BE BASED ON A 0.8 MAINTENANCE FACTOR OF INITIAL LUMEN VALUE AS RATED BY THE LAMP MANUFACTURER.
d. LIGHT DISTRIBUTION PATTERN SHALL BE TYPE III WITH HOUSE SIDE SHIELD UNLESS OTHERWISE SPECIFIED.
e. LIGHT SPACING SHALL BE DETERMINED BY PHOTOMETRIC DIAGRAM.

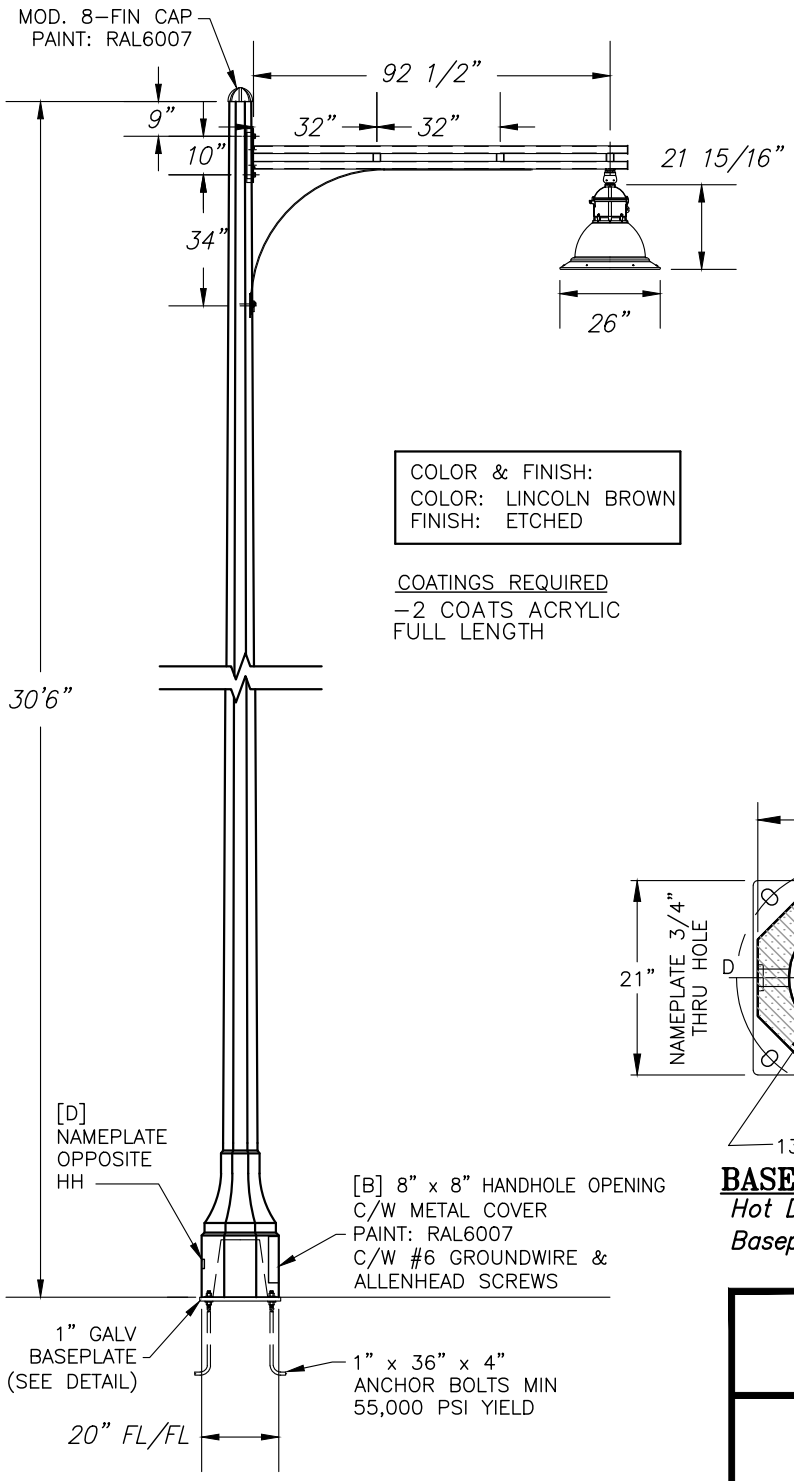

COLOR & FINISH:
COLOR: LINCOLN BROWN
FINISH: ETCHED

COATINGS REQUIRED
-2 COATS ACRYLIC
FULL LENGTH

LUMINAIRE SPECIFICATIONS

CATALOG NO.:	K829-P4FL-III-60(SSL) -8060-120:277V-KPL10
OPTICAL SYSTEM:	FLAT ARRAY, FLAT LENS
IES LTG. CLASS.:	TYPE III
WATTAGE:	60W SOLID STATE LIGHTING
SERIES:	8060
CCT/DIODE:	4000K/HE5
LINE VOLTAGE:	120:277V
PAINT:	RAL6007
OPTIONS:	KPL10 LEVELING DEVICE

ARM SPECIFICATIONS

CATALOG NO.:	SPECIAL KA55-S-8'
MATERIAL:	ALUMINUM
PAINT:	RAL6007

POLE SPECIFICATIONS:

CATALOG NO.:	KCT2-30.5-G-E43-FBP C/W FC
SECTION:	OCTAGONAL
COLOR:	LINCOLN BROWN
FINISH:	ETCHED
POLE TOP:	5 11/16" FL/FL
POLE BUTT:	20" FL/FL
POLE LENGTH:	30' 6"
APPROX. WGT.:	1820 LBS
MIN RACEWAY:	1 1/8" ø
ANCHOR BOLTS:	(4) 1" x 36"
MIN. YIELD STRENGTH:	55,000 psi
OPTIONS:	STANDARD LIFETIME WARRANTY STANDARD MIN. 8000PSI CONCRETE STRENGTH

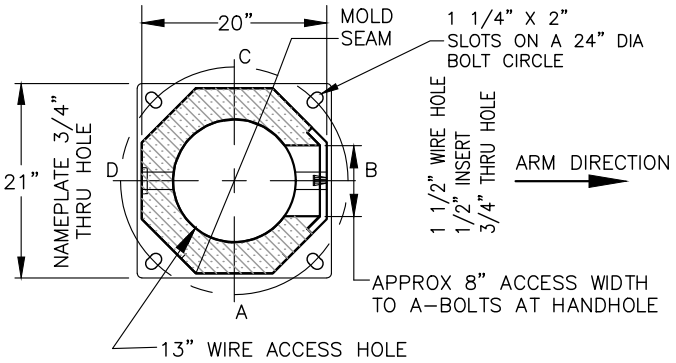

BASEPLATE DETAIL
Hot Dipped Galvanized
Baseplate 1" x 21" sq

CITY OF LINCOLN
ENGINEERING DEPARTMENT

TEAR DROP
STREET LIGHT

REVISIONS:	DATES:	APPROVED:
		CITY ENGINEER DATE

SCALE: NONE
DATE: SEPTEMBER 2019
DRAWN BY: C.G.

SL-1A

	STREET LIGHT TYPE	NORMAL MOUNTING HEIGHT	LED WATTAGE[a]	SPACING (ONE SIDE ONLY)[b]	AVG MAINTAINED FC[c,d]	AVG: MIN RATIO (COMMERCIAL)	AVG: MIN RATIO (RESIDENTIAL)
MINOR RESIDENTIAL	B	14'	40	125	0.15		
PRIMARY RESIDENTIAL	B	14'	40	125	0.15		
COLLECTOR	A	30'	60	e	0.26	4:1	5:1
INDUSTRIAL/COMMERCIAL	A	30'	73	e	0.26	4:1	
MINOR ARTERIAL	A	30'	60	e	0.35	4:1	5:1
MAJOR ARTERIAL	A	30'	60	e	0.56	4:1	
SPECIAL THOROUGHFARE	A	30'	73	e	0.56	4:1	

a. LAMP WATTAGE IS FOR LED ONLY. DESIGN CRITERIA MUST BE SUBMITTED FOR ALL OTHER LAMPS
b. SPACING MAY BE ADJUSTED BY ±20% TO ACCOMMODATE DRIVEWAYS AND INTERSECTIONS.
c. LUMENS USED TO CALCULATE THE AVERAGE MAINTAINED FOOT-CANDLE SHALL BE BASED ON A 0.8 MAINTENANCE FACTOR OF INITIAL LUMEN VALUE AS RATED BY THE LAMP MANUFACTURER.
d. LIGHT DISTRIBUTION PATTERN SHALL BE TYPE III WITH HOUSE SIDE SHIELD UNLESS OTHERWISE SPECIFIED.
e. LIGHT SPACING SHALL BE DETERMINED BY PHOTOMETRIC DIAGRAM.

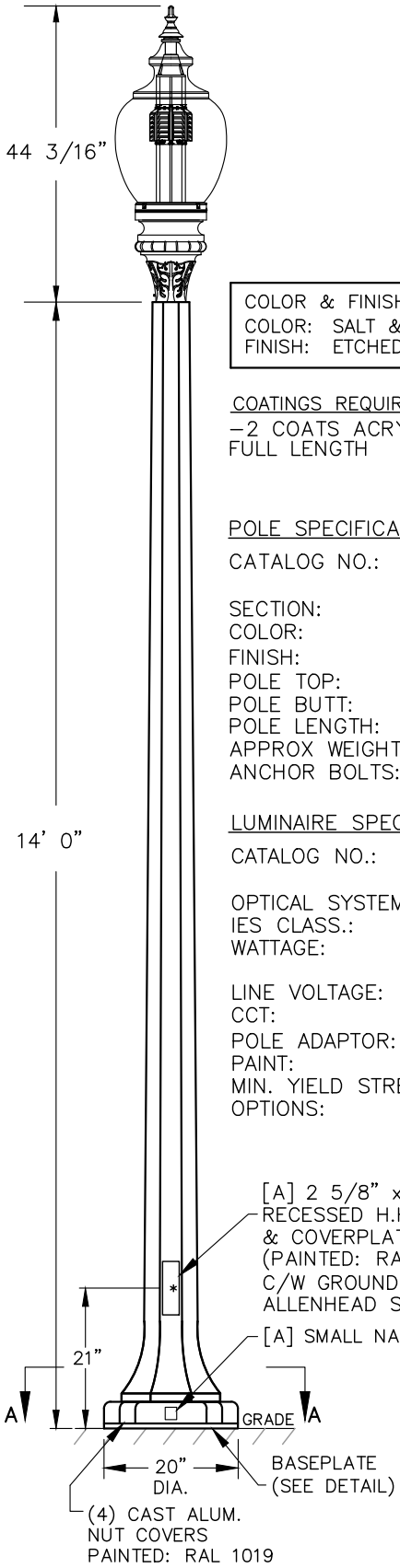

COLOR & FINISH:
COLOR: SALT & PEPPER
FINISH: ETCHED

COATINGS REQUIRED
-2 COATS ACRYLIC
FULL LENGTH

POLE SPECIFICATIONS

CATALOG NO.:	KS14-G-RBP-E30 C/W 140-35/35
SECTION:	OCTAGONAL
COLOR:	SALT & PEPPER
FINISH:	ETCHED
POLE TOP:	5 1/2" FLAT TO FLAT
POLE BUTT:	20" ø
POLE LENGTH:	14' 0"
APPROX WEIGHT:	840 lbs.
ANCHOR BOLTS:	3/4" x 27" (BY OTHERS)

LUMINAIRE SPECIFICATIONS

CATALOG NO.:	K118R-B2AR-III-40(SSL) -1042-120:277V-K13-4K
OPTICAL SYSTEM:	BAFFLED ARRAY ACRYLIC RIPPLED
IES CLASS.:	TYPE III
WATTAGE:	40W (1042 SERIES) SOLID STATE LIGHTING
LINE VOLTAGE:	120:277V
CCT:	4000K
POLE ADAPTOR:	K13
PAINT:	TEXTURED RAL 1019
MIN. YIELD STRENGTH:	55.000 psi
OPTIONS:	STANDARD LIFETIME WARRANTY STANDARD MIN. 8000PSI CONCRETE STRENGTH

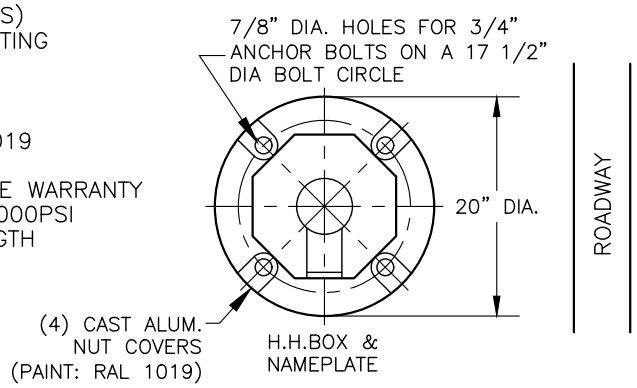

BASEPLATE DETAIL (SECTION A-A)
MAT'L: 3/4" THICK GALV. STL.

CITY OF LINCOLN
ENGINEERING DEPARTMENT

POST TOP STREET LIGHT

REVISIONS:	DATES:	APPROVED:
		CITY ENGINEER DATE

SCALE: NONE
DATE: SEPTEMBER 2019
DRAWN BY: C.G.

SL-1B

POLE TYPE	POLE DATA			
	A HEIGHT	Min OD		WALL THICKNESS
		BASE	TOP	
15	30'–0"	8"	3 11/16"	0.1196"

BASE PLATE DATA				CIDH PILE FOUNDATION	
C	BC = BOLT CIRCLE	THICKNESS	ANCHOR BOLT SIZE	Dia	DEPTH
1'–0"	1'–0"	1 1/2"	1" Á x 36" *	2'–6"	6'–0"

* FOR BARRIER RAIL BOLTS, SEE REVISED STANDARD PLAN RSP ES–6B.

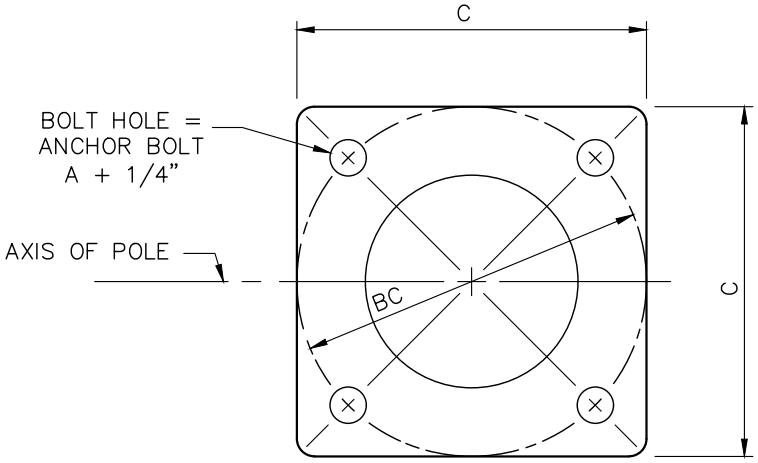

BASE PLATE
DETAIL A

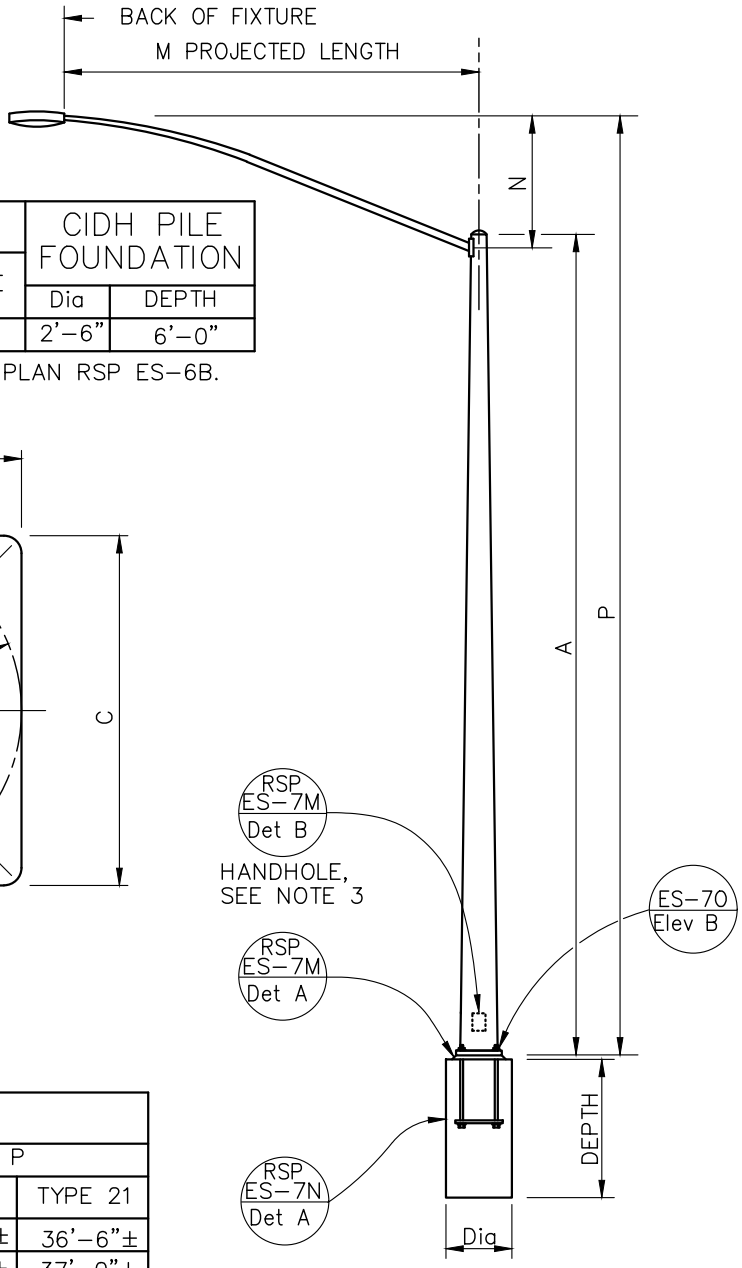

TYPE "15"
ELEVATION A

LUMINAIRE MAST ARM DATA					
M PROJECTED LENGTH	N RISE	Min OD AT POLE	NOMINAL THICKNESS	P	
				TYPE 15	TYPE 21
6'–0"	2'–0"±	31/4"	0.1196"	31'–6"±	36'–6"±
8'–0"	2'–6"±	31/2"		32'–0"±	37'–0"±
10'–0"	3'–3"±	37/8"		32'–9"±	37'–9"±
12'–0"	4'–3"±			33'–9"±	38'–9"±
15'–0"	4'–9"±	41/4"		34'–3"±	39'–3"±

NOTES:

1. ☐ INDICATES MAST ARM LENGTH TO BE USED UNLESS OTHERWISE NOTED ON THE PLANS.
2. FOR TYPE 15–SB, USE TYPE 15 STANDARD WITH TYPE 30 SLIP BASE PLATE DETAILS, SEE STANDARD PLAN ES–6F.
3. HANDHOLE SHALL BE LOCATED ON THE DOWNSTREAM SIDE OF TRAFFIC.
4. FOR ADDITIONAL NOTES AND DETAILS, SEE REVISED STANDARD PLANS RSP ES–7M AND RSP ES–7N.

CITY OF LINCOLN
ENGINEERING DEPARTMENT

CALTRANS "TYPE 15" STREET LIGHTS

REVISIONS:	DATES:	APPROVED:
		CITY ENGINEER DATE

SCALE: NONE
DATE: SEPTEMBER 2019
DRAWN BY: C.G.

SL-1C

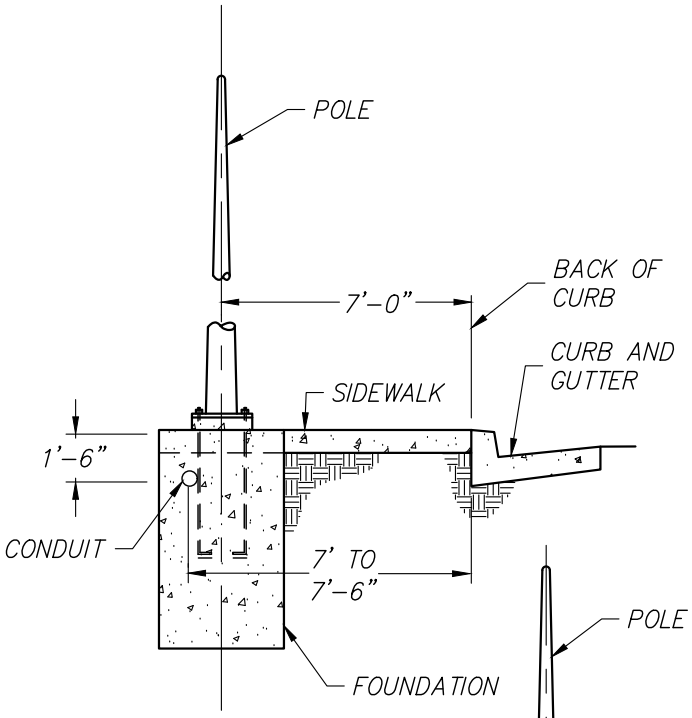

6' SIDEWALK

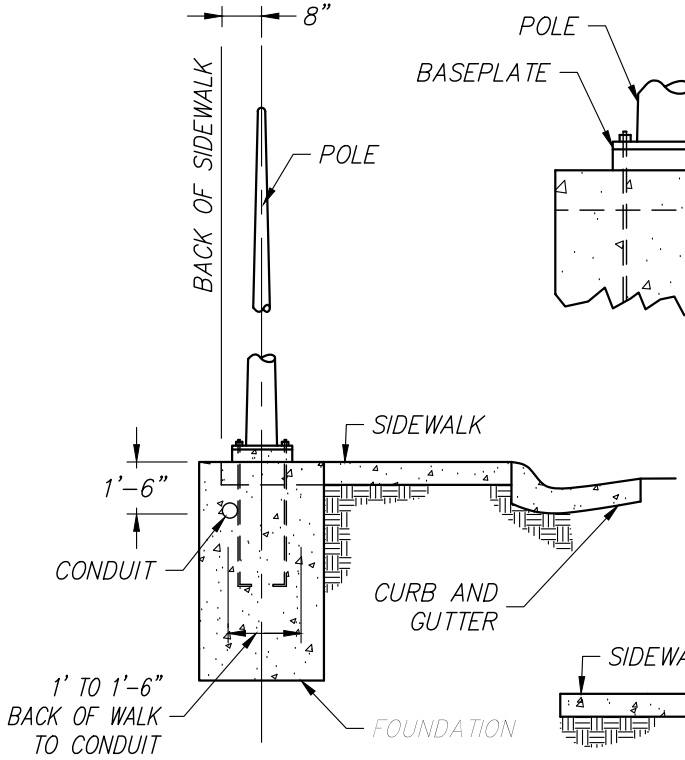

VARIABLE SIDEWALK WIDTH (OVER 6')

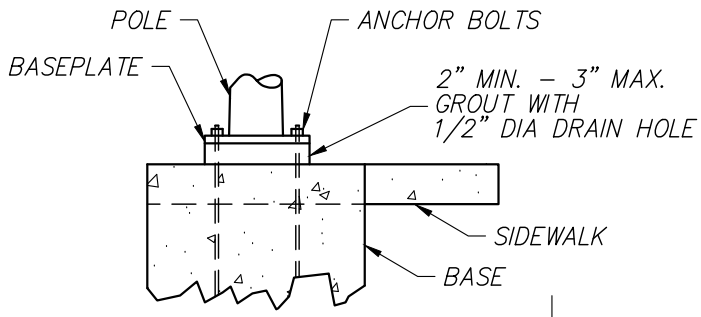

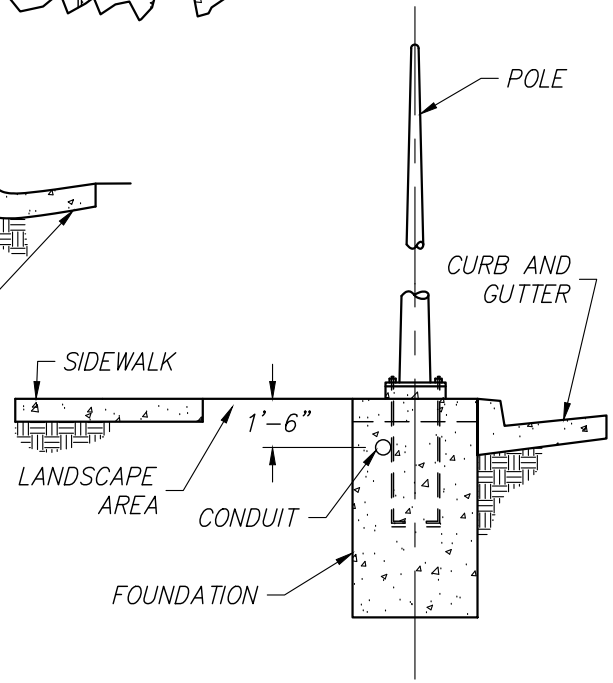

CURB SEPARATED FROM SIDEWALK

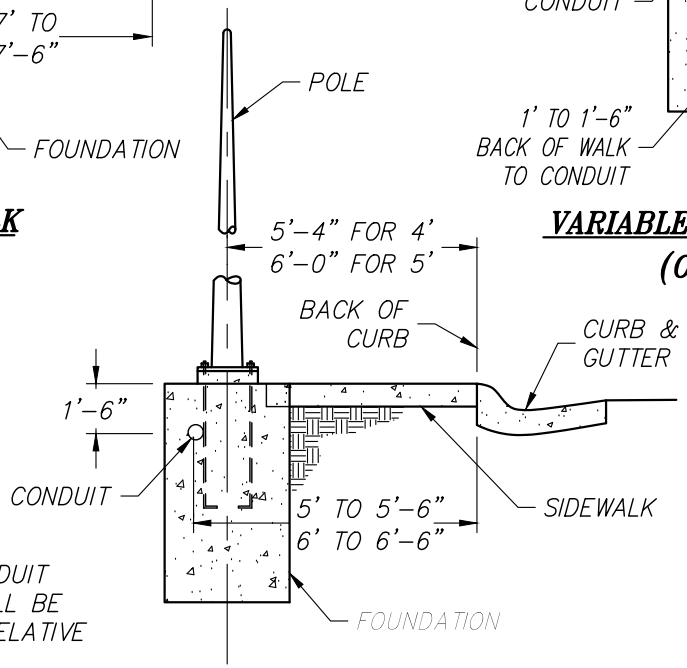

4' & 5' SIDEWALK

NOTES:

1. BEHIND SIDEWALK CONDUIT TRENCH BACKFILL SHALL BE COMPACTED TO 90% RELATIVE COMPACTION.
2. UNDER STREET CONDUIT TRENCH BACKFILL SHALL BE COMPACTED TO 95% RELATIVE COMPACTION.
3. FOUNDATION DIMENSIONS PER IMPROVEMENT PLAN.

REVISIONS:	DATES:	APPROVED:
		CITY ENGINEER DATE

CITY OF LINCOLN
ENGINEERING DEPARTMENT

FOUNDATION LOCATION STREET LIGHTS

SCALE: NONE
DATE: SEPTEMBER 2019
DRAWN BY: C.G.

SL-2

2-WIRE SYSTEM

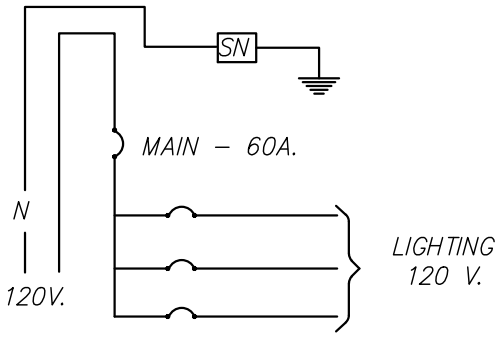

DIAGRAM – A
(UNMETERED)

USE ON MULTIPLE LIGHTING SYSTEMS WITH LESS THAN 4 LIGHTS ON EACH CIRCUIT. ALL LIGHTS SHALL HAVE PHOTO CELLS.

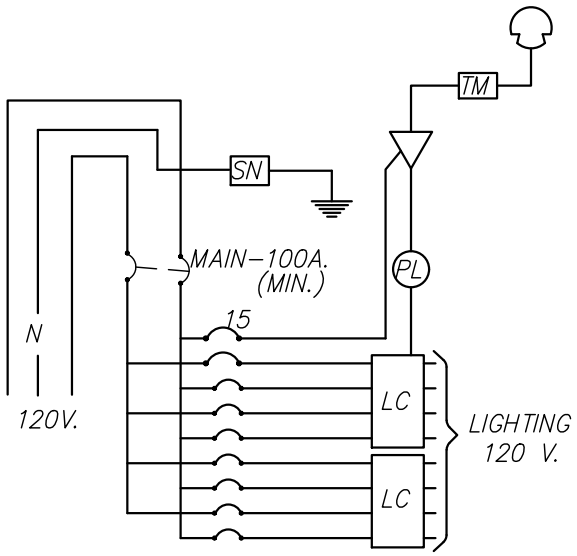

DIAGRAM – C

USE ON MULTIPLE LIGHTING SYSTEMS WITH FOUR OR MORE LIGHTS ON EACH CIRCUIT.

3-WIRE SYSTEM

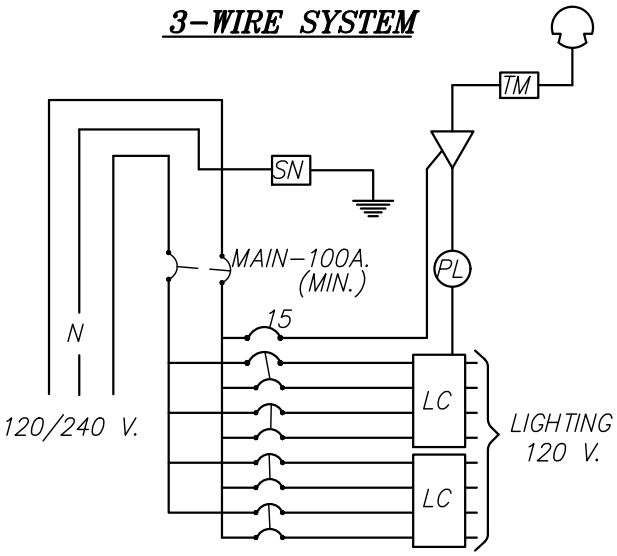

DIAGRAM – E

USE ON MULTIPLE LIGHTING SYSTEMS WITH FOUR OR MORE LIGHTS ON EACH CIRCUIT.

CITY OF LINCOLN
ENGINEERING DEPARTMENT

STREET LIGHT SERVICE WIRING DIAGRAM

REVISIONS:	DATES:	APPROVED:
		CITY ENGINEER DATE

SCALE: NONE
DATE: SEPTEMBER 2019
DRAWN BY: C.G.

SL-3

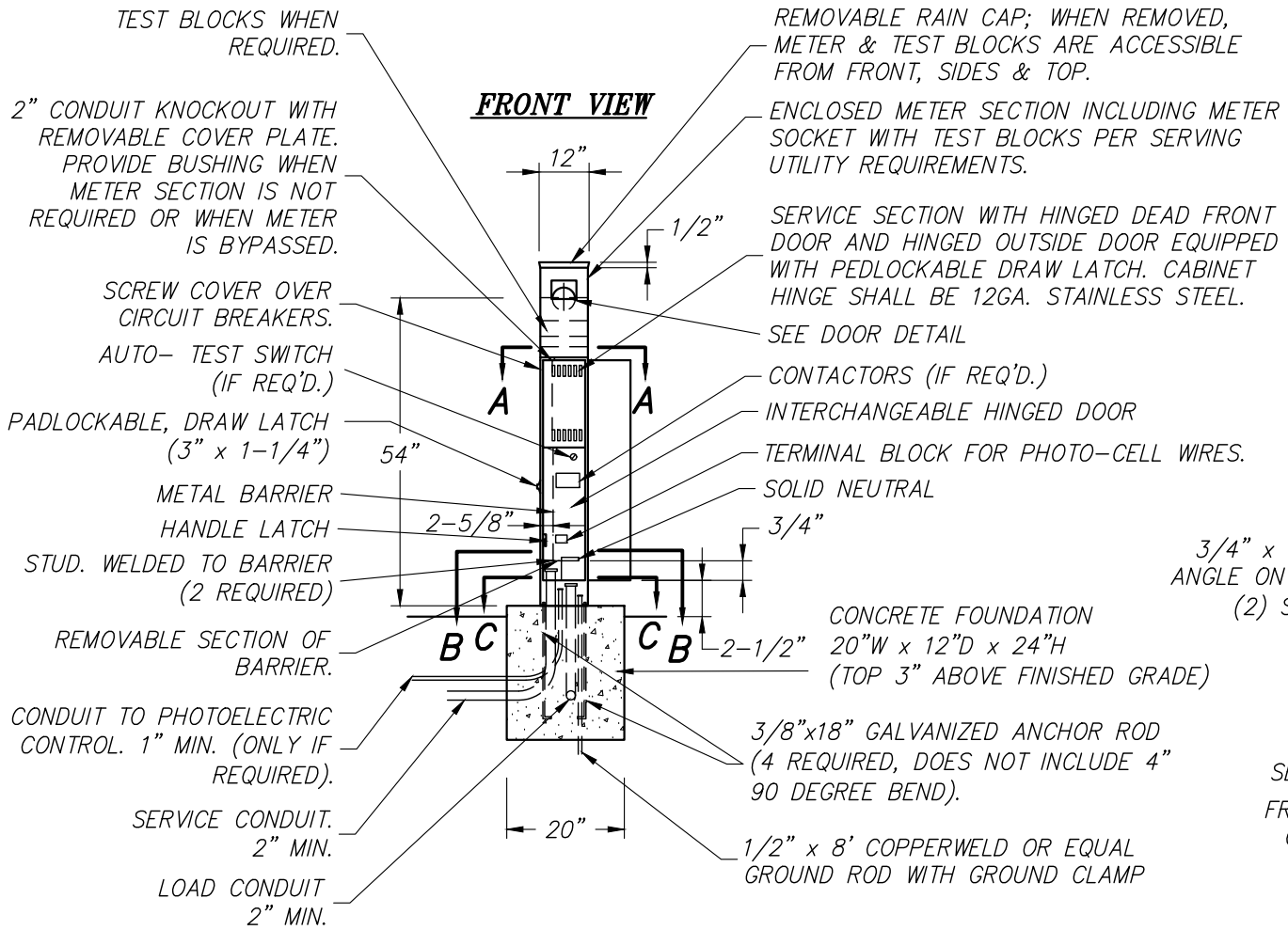

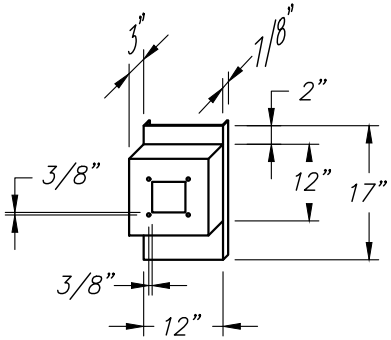

DOOR DETAIL

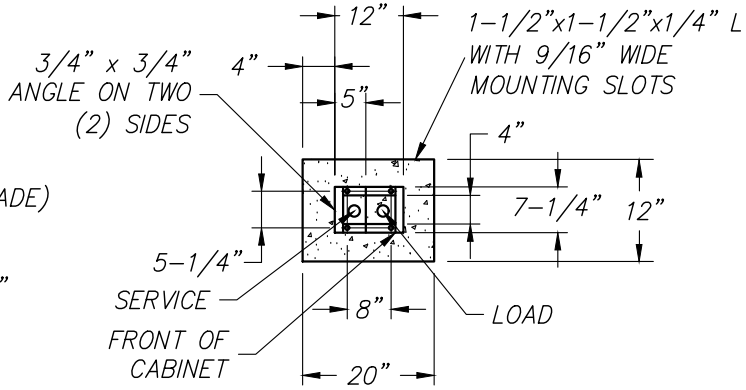

SECTION C-C

NOTE: GENERAL NOTES LISTED ON SL-5.

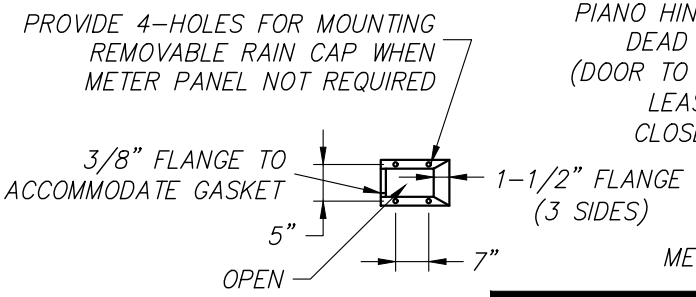

SECTION A-A

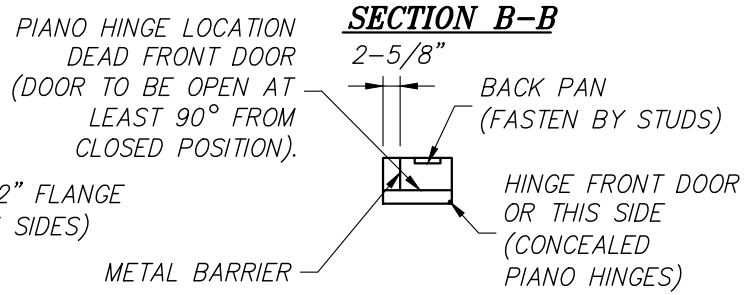

SECTION B-B

CITY OF LINCOLN
ENGINEERING DEPARTMENT

SERVICE CABINET & METER SOCKET FRONT VIEW

REVISIONS:	DATES:	APPROVED:
		CITY ENGINEER DATE

SCALE: NONE
DATE: SEPTEMBER 2019
DRAWN BY: C.G.

SL-4

SIDE VIEW

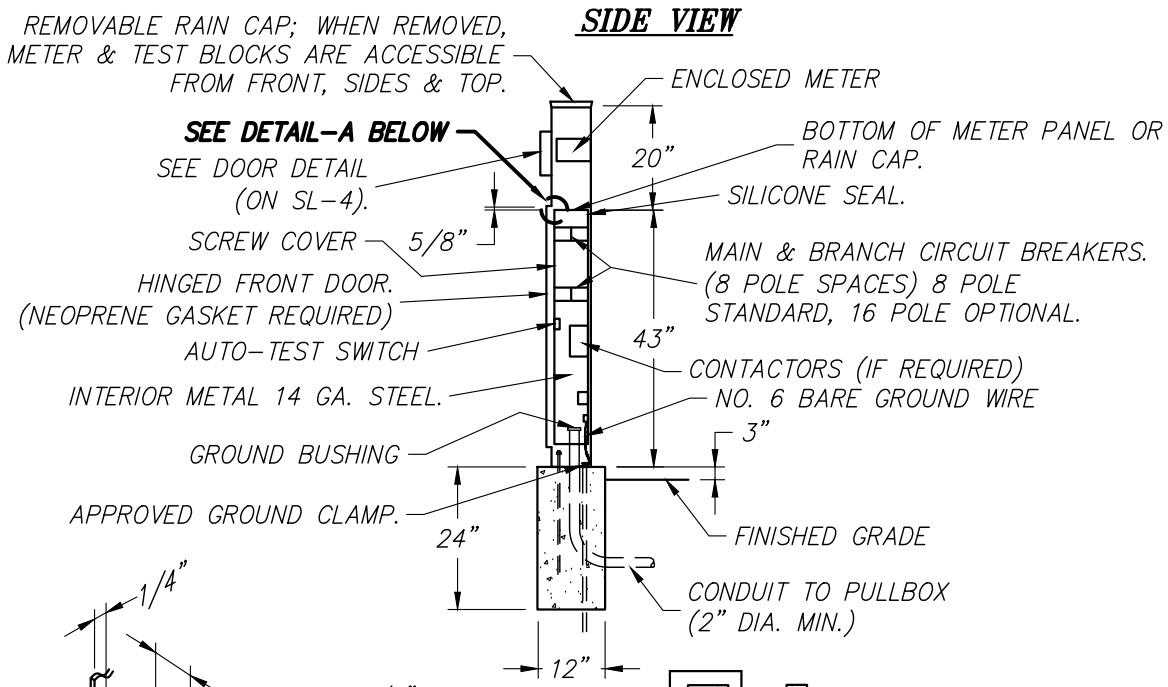

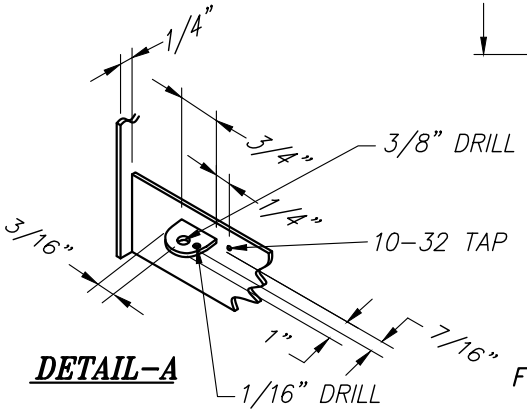

DETAIL-A

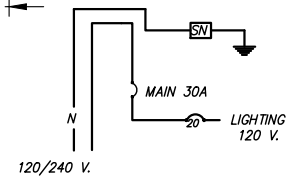

DIAGRAM - B
(UNMETERED)
FOR MAX. OF 3 STREET LIGHTS.

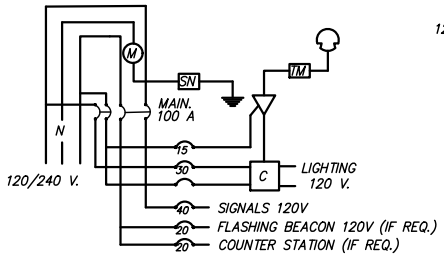

DIAGRAM - B
(METERED & UNMETERED)

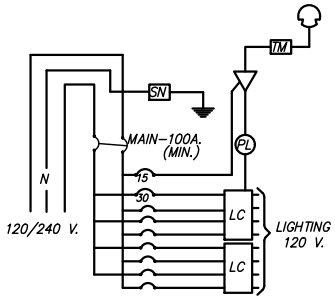

DIAGRAM - C
(STREET LIGHT)

WIRING DIAGRAM SYMBOLS

- (M) METER SECTION WITH MANUAL CIRCUIT CLOSING DEVICE
- [C] CONTACTOR (LIGHTING) - 30A
- [LC] ELECTRICALLY HELD CONTACTOR - 30 A
- PHOTOELECTRIC UNIT (BY OTHERS)
- ▽ AUTO-TEST SWITCH
- [SN] SOLID NEUTRAL BUS
- [TM] TERMINAL BLOCK FOR PHOTOCELL WIRES

GENERAL NOTES:

1. SERVICE PEDESTAL SHALL CONFORM TO THE PROVISIONS IN SECTIONS 96-2.11 "SERVICE" OF THE STATE OF CALIFORNIA.
2. SEE PLANS FOR CONDUIT AND WIRE SIZE.
3. PAINT SERVICE CAN AND METER SECTION.
4. SERVICE EQUIPMENT CABINET SHALL BE PRE-WIRED AND SHALL CONFORM TO N.E.M.A. CLASS 2 C STANDARDS.
5. ALL CONTROL WIRING SHALL BE AWG 14 PED TW 19 STRAND WIRE UNLESS OTHERWISE NOTED.
6. EACH SERVICE EQUIPMENT CABINET SHALL BE PROVIDED WITH "PHENOLIC" NAME PLATE ON THE DEAD FRONT PANEL FOR EACH BREAKER INSTALLED. ALL NAME PLATES TO BE SCREWED ON.
7. A PLASTIC COATED WIRING DIAGRAM SHALL BE PROVIDED AND ATTACHED TO THE INSIDE OF THE FRONT DOOR.
8. ALL SERVICE EQUIPMENT CABINETS SHALL BE NEMA 3-R.
9. FACTORY BUSSED (300 AMP) UNDERGROUND PULL SECTION WITH ALUMINUM BODIED LANDING LUGS WITH MULTIPLE SECONDARY LUGS FOR PRE WIRED METERED AND UNMETERED CIRCUITS.
10. ALL EQUIPMENT SUPPLIED SHALL BE A CURRENTLY MANUFACTURED ITEM.
11. DIAGRAM-B THE SERVICE EQUIPMENT CABINET SHALL BE SPLIT BUSSED TO PERMIT METERED AND UNMETERED BRANCH CIRCUITS.
12. DIAGRAM-C FOR SMALLER SERVICE WHEN SHOWN. THE UNUSED COMPONENTS WILL NOT BE REQUIRED.

CITY OF LINCOLN
ENGINEERING DEPARTMENT

SERVICE CABINET & METER SOCKET SIDE VIEW & NOTES

REVISIONS:	DATES:	APPROVED:
		CITY ENGINEER DATE

SCALE: NONE
DATE: SEPTEMBER 2019
DRAWN BY: C.G.

SL-5

TYPICAL VOLTAGE DROP CALCULATION FOR 2-WIRE SYSTEM

VOLTAGE DROP (COPPER CONDUCTOR) = $\frac{DxAxNx22}{\text{CIRCULAR MILS}}$

D = LENGTH OF SECTION, ON FEET.
A = LINE OPERATING AMPERES DRAWN BY ONE LIGHT.
N = NUMBER OF LIGHTS IN THE CIRCUIT BEYOND THE SECTION.

SIZE WIRE	AERA(CIRCULAR MILS)
14	4,110
12	6,530
10	10,380
8	16,510
6	26,250
4	41,740

LINE OPERATING AMPERES FOR HIGH PRESSURE SODIUM LUMINAIRES
100 WALTS....1.25 AMPS
150 WALTS....1.80 AMPS
250 WALTS....2.90 AMPS

EXAMPLE:

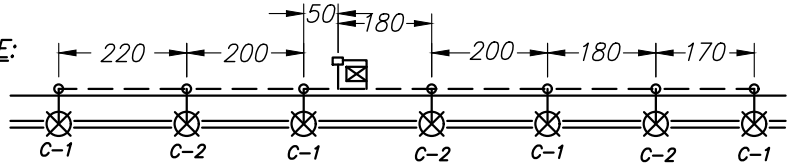

FIND TOTAL VOGTAGE DROP IN CIRCUIT #1 (115 VOLT SYSTEM)

SECTION .... $\frac{30(2.9x4)(22)}{16,510} = 0.46$

SECTION .... $\frac{360(2.9x2)(22)}{10,380} = 4.43$

SECTION .... $\frac{220(2.9x1)(22)}{10,380} = 1.35$

TOTAL VOLTAGE DROP = 6.24

LEGEND:

- 250w HIGH PRESSURE SODIUM LUMINAIRES
- C-1 CIRCUIT #1
- SERVICE CAN
- CONDUIT

NOTES:

1. DESIGN MUST BE BASED ON A TWO (2) WIRE SYSTEM, EVEN THOUGH THREE (3) WIRES (w/ A SINGLE COMMON WIRE) ARE ACTUALLY USED.
2. MAXIMUM VOLTAGE DROP ALLOWED = 8.05 VOLTS.
3. USE 56' R/W STANDARDS FOR R/W LESS THEA 56'.

WIRE SIZE FOR 2-WIRE MULTIPLE STREET LIGHTING SYSTEM

HIGH PRESS SODIUM LAMP WATTAGE	STREET CLASSIFY CATION	MC LIGHTS DIM SAME CIRCUIT	MAXIMUM DISTANCE 440	600	660	720	800	860	900	1000	1080	1100	1200	1320	1440	1500	1540	1600	1760	1800	2000	2100	2160	2400	2420	2640	2840	3000
250w	MAJOR ART. 96'	2			10																							
		3	10					6					6															
		4						6																				
150w	MAJOR IND. 84'	2	14		12																							
		3	12				10					8																
		4					8										6											
		5				8								6														
150w	MINOR ART. 74'	2			12					10				8														
		3						8											6									
		4									6																	
150w	MINOR IND. & COLLECT 96'	2			12					10							8											
		3							8														6					
		4								6																		
100w	RES. 56'	2		14						12						10												
		3						10											8				6					
		4							8															6				
		5											6															

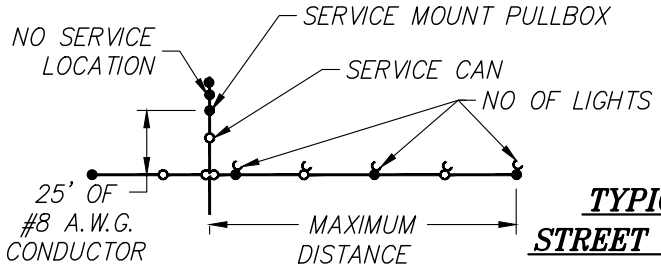

TYPICAL MULTIPLE STREET LIGHTING SYSTEM

CITY OF LINCOLN
ENGINEERING DEPARTMENT

STREET LIGHT WIRE SIZE CHART

REVISIONS:	DATES:	APPROVED:
		CITY ENGINEER DATE

SCALE: NONE
DATE: SEPTEMBER 2019
DRAWN BY: C.G.

SL-7

TYPICAL VOLTAGE DROP CALCULATION FOR 3-WIRE SYSTEM

$$\text{VOLTAGE DROP (COPPER CONDUCTOR)} = \frac{D \times A \times N \times 11}{\text{CIRCULAR MILS}}$$

D = LENGTH OF SECTION, ON FEET.
A = LINE OPERATING AMPERES DRAWN BY ONE LIGHT.
N = NUMBER OF LIGHTS IN THE CIRCUIT BEYOND THE SECTION.

SIZE WIRE	AERA(CIRCULAR MILS)
14	4,110
12	6,530
10	10,380
8	16,510
6	26,250
4	41,740

LINE OPERATING AMPERES FOR HIGH PRESSURE SODIUM LUMINAIRES
100 WALTS....1.25 AMPS
150 WALTS....1.80 AMPS
250 WALTS....2.90 AMPS

EXAMPLE:

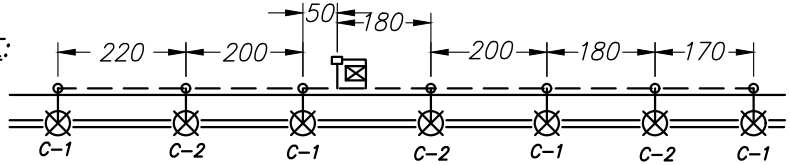

FIND TOTAL VOGTAGE DROP IN CIRCUIT #1 (115 VOLT SYSTEM)

SECTION A... $\frac{30(2.9 \times 4)(11)}{16,510} = 0.23$

SECTION B... $\frac{360(2.9 \times 2)(11)}{6,530} = 3.52$

SECTION C... $\frac{220(2.9 \times 1)(11)}{6,530} = 1.71$

TOTAL VOLTAGE DROP = 5.46

LEGEND:

- 250w HIGH PRESSURE SODIUM LUMINAIRES
- C-1 CONDUIT #1
- SERVICE CAN
- CONDUIT

NOTE: MAXIMUM VOLTAGE DROP ALLOWED 7.0 VOLTS

WIRE SIZE FOR 3-WIRE MULTIPLE STREET LIGHTING SYSTEM

H P S LAMP WATTAGE	STREET CLASSIFY CATION	LIGHTS SAME CIRCUIT x	MAXIMUM DISTANCE 660	880	1000	1100	1200	1320	1440	1540	1600	1760	1800	1920	1980	2160	2200	2400	2640	2700	2860	2880	3080	3120	3300	3520	3840	4000	4080	4400
250w	MAJOR ART. xx'	2	12																											
		3	12	10	8																									
		4	8					6																						
		5	8				6																							
150w	MAJOR IND. 84'	2	14																											
		3	12	10																										
		4	8												6															
		5	8							6																				
150w	MAJOR ART. 74'	2	14	12																										
		3	12		10				8																					
		4	10					8							6															
		5	8									6																		
150w	MINOR IND. & COLLECT xxxxx	2	14	12			10																							
		3	10						8																					
		4	8												6															
		5	6																											
100w	RES. 56'	2	14		12																									
		3	12						10																					
		4	10							8																				
		5	8															6												

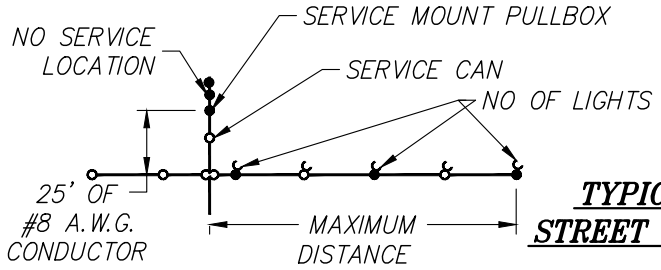

TYPICAL MULTIPLE STREET LIGHTING SYSTEM

CITY OF LINCOLN
ENGINEERING DEPARTMENT

STREET LIGHT WIRE SIZE CHART 2

REVISIONS:	DATES:	APPROVED:
		CITY ENGINEER DATE

SCALE: NONE
DATE: SEPTEMBER 2019
DRAWN BY: C.G.

SL-8

CONDUIT SIZING

CONDUIT SIZE	1"	1 1/2"	2"	2 1/2"	3"	3 1/2"
EQUIVALENT NUMBER OF #14 A.W.G. CONDUCTORS*	8	19	31	44	69	91

* 1-#12 CONDUCTOR = 1.2-#14 CONDUCTORS
1-#10 CONDUCTOR = 1.5-#14 CONDUCTORS
1-#8 CONDUCTOR = 2.3-#14 CONDUCTORS
1-#6 CONDUCTOR = 3-#14 CONDUCTORS
1-#4 CONDUCTOR = 4-#14 CONDUCTORS

CONDUIT BREAKER SIZING

CONDUCTOR SIZE A.W.S.	MAXIMUM CIRCUIT BREAKER AMPERAGE
#2	100
#4	80
#6	50
#8	40
#10	30

NOTE: THE BREAKER SIZE SHALL BE DETERMINED FROM THE SMALLEST CONDUCTOR IN THE CIRCUIT.

CITY OF LINCOLN
ENGINEERING DEPARTMENT

STREET LIGHT CONDUIT AND BREAKER SIZES

REVISIONS:	DATES:	APPROVED:
		CITY ENGINEER DATE

SCALE: NONE
DATE: SEPTEMBER 2019
DRAWN BY: C.G.

SL-9

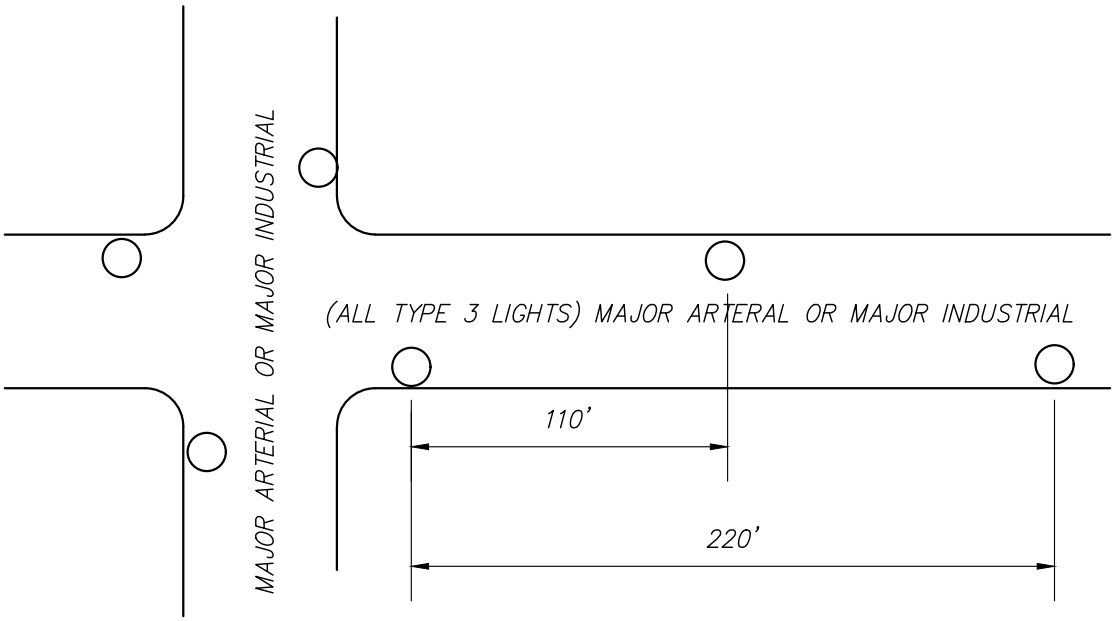

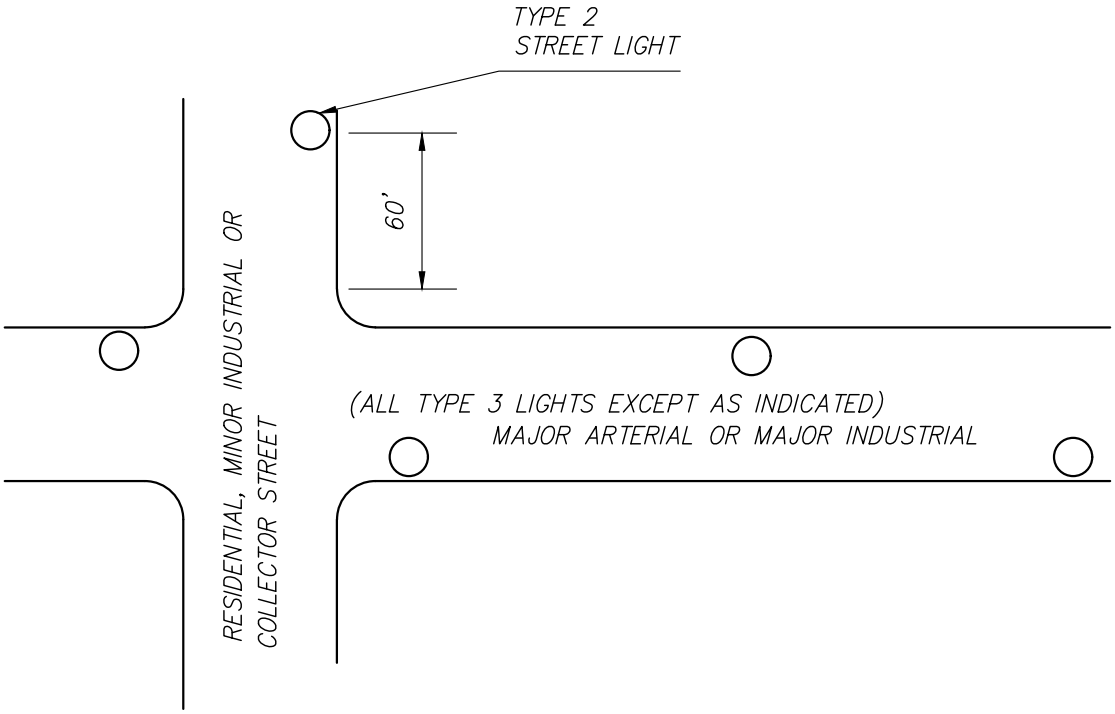

NOTES: ANY MODIFICATIONS REQUIRE APPROVAL OF CITY ENGINEER.

CITY OF LINCOLN
ENGINEERING DEPARTMENT

STREET LIGHT LOCATIONS AT MAJOR ARTERIALS & MAJOR INDUSTRIAL

REVISIONS:	DATES:	APPROVED:
		CITY ENGINEER DATE

SCALE: NONE
DATE: SEPTEMBER 2019
DRAWN BY: C.G.

SL-10

[THIS PAGE INTENTIONALLY LEFT BLANK]

SECTION 10

RECYCLED WATER SYSTEM (RW)

10-1 General RW-1
10-2 Connection to Existing Improvements RW-2
10-3 Construction Staking RW-3
10-4 Trench Work RW-3
A. Existing Pavement RW-3
B. Water in Trench RW-4
C. Unsuitable Trench Bottom RW-4
D. Open Trench RW-5
E. Steel Trench Plates RW-5
F. Temporary RW-5
G. Pipe Support RW-5
H. Trench Width RW-5
I. Excess Material RW-5
10-5 Pipe Bedding RW-5
10-6 Concrete Cradles, Arches & Encasements RW-6
10-7 Pipe Installation RW-6
A. Manufacturer's Recommendations RW-6
B. Pipe Cleanliness RW-6
C. Cathodic Protection RW-7
D. Placing Pipe RW-7
E. Joining Pipe RW-7
F. Covering Pipe RW-7
G. Pipe Restraints and Fittings RW-7
H. Tracing Wire RW-7
I. Pipe Protection Marking RW-8
J. Polyethylene Protection RW-8
K. Polyvinyl Chloride (PVC) Pressure Pipe Installation RW-8
L. Ductile Iron Pipe (DIP) RW-9
M. Transitions RW-9
N. Borings RW-9
10-8 Service Installations RW-10
A. Service Runs RW-11
B. Saddles RW-11
C. Warning Tape RW-11
D. Service Manifolds RW-11
E. Curb Marking RW-11
10-9 Service Abandonment RW-12
10-10 Appurtenances Installations RW-12
A. Underground Protection RW-12
B. Gate Valves RW-12
C. Waning Markings RW-12
D. Dead End Lines RW-12
E. Insulation RW-12
10-11 Pipe Backfill RW-13
A. Performance Based QA/QC (Non-Testable Materials) RW-13
B. Design Based QA/QV (Testable Materials) RW-13

C. Trench Backfill Material RW-14
D. Pipe Zone Backfill RW-14
E. Compaction Test Methods RW-15
F. Testing Frequencies RW-15
10-12 On-Site Recycled Water Facilities RW-15
A. Inspections RW-15
B. Coverage Test for On-Site Irrigation Systems RW-16
C. Controller Charts RW-16
D. Conversion from Potable System to Recycled Water Supply RW-16
E. Conversion from Recycled Water System to Potable Water Supply ..... Supply RW-17
F. On-Site Identification RW-17
G. Quick Coupling Valves RW-18
1. Recycled Water RW-18
2. Potable Water RW-18
H. Sprinklers RW-18
I. Warning Labels RW-18
J. Valve Boxes, Meter Boxes and Tags RW-19
1. Valve and Meter Boxes RW-19
2. Valve and Meter Tags RW-19
K. On-Site Recycled Water Piping RW-19
1. Minimum Requirements of Piping and Fittings RW-20
2. PVC Piping RW-20
L. On-Site Potable Water Piping RW-21
10-13 Testing Procedures RW-22
A. Pressure Test RW-22
B. Tying into the City System RW-23
C. Continuity Testing RW-23
D. Cross-Connection Testing RW-23
10-14 Repairing Installed Improvements RW-23
10-15 Punch List Process RW-24
10-16 Materials RW-24
A. Approved Equal RW-24
1. Product RW-24
2. Contact RW-24
3. Reference RW-24
B. Unapproved Materials RW-24
C. Recycled Water Main RW-24
1. PVC Pressure Pipe RW-24
2. Ductile Iron Pipe RW-25
D. Services RW-25
1. Copper Tubing RW-25
2. Brass Material RW-26
a. Brass Pipe RW-26
b. Brass Fitting RW-26
c. Brass Fittings for Copper Tubing RW-26
3. Corporation Stops RW-26
4. Curb Stops RW-27
5. Dielectric Tape RW-27
6. Service Saddles RW-27
E. Appurtenances RW-28
1. Air Release Valves RW-28
2. Blocking for Boxes RW-28
3. Blow Off RW-28

4. Fittings RW-29
5. Gaskets RW-29
6. Location Stakes RW-29
7. Mainline Valve Lockout RW-30
8. Manhole Frame and Cover RW-30
9. Meters RW-30
10. Meter Idlers RW-30
11. Meter Setters RW-30
12. Meter Spud Couplers RW-30
13. Nuts & Bolts RW-30
14. Nylon Bushings RW-31
15. Patching Material RW-31
16. Polyethylene Encasement RW-31
17. Pressure Regulators RW-31
18. Restraints RW-31
19. Riser Stock RW-32
20. Sampling Stations RW-32
21. Sap Seal RW-32
22. Service Boxes and Lids RW-32
23. Silicone RW-32
24. Telemetering Conduits RW-32
25. Traffic Boxes RW-33
26. Tracing Wires RW-33
27. Tracing Wire Connectors RW-33
28. Tracing Wire Mastic Tape Seal RW-33
29. Valves RW-33
30. Valve Boxes RW-34
31. Valve Covers RW-34
32. Water Pipe Marking Tape RW-34
33. Zinc Caps RW-34

10-17 Recycled Water System Details RW-35

SECTION 10

RECYCLED WATER SUPPLY SYSTEM (RW)

10-1 **GENERAL**- All improvements within the City of Lincoln will be approved and permitted by the City, and will conform to the City of Lincoln Design Criteria & Procedures Manual. All pipe, fittings, valves, and other appurtenances installed in the City's rights-of-way will be installed in strict accord with the approved project improvement plans, these Public Facilities Improvement Standards, certain parts of the latest editions of the Caltrans Standard Plans and Standard Specifications, and as recommended by the material manufacturer.

Should conflicts arise between documents, the approved project improvement plans will govern over these Public Facilities Improvement Standards, These Public Facilities Improvement Standards will govern over the Caltrans Standard Specifications. In the event of conflict between applicable documents and/or plans, the most restrictive will prevail.

The manufacturer's guidelines for all materials to be used on the project will be present on the construction site at all times.

Developers/Contractors will comply with all applicable City, County, State, and Federal laws and regulations relating to construction of the improvements as required.

If the City Engineer determines that any work on private or public property constitutes a hazard to the health, safety, or welfare of the public; endangers property; adversely affects the safety, us or stability of adjacent property; an overhead or underground utility, or a public way, watercourse or drainage channel; or could adversely affect the air quality; or the water quality of any water bodies or water courses; the City Engineer may issue a stop work notice to the owner of the property upon which the condition is located, or other person or agent in control of such property. Upon receipt of such stop work notice, the recipient will, within the period specified therein, stop all work, obtain any necessary permits and conform to the requirements identified in the stop work notice. The City Engineer may require the submission of plans or other reports, detailed construction recommendations, studies, or other engineering data prior to and in connection with any corrective or proposed work or activity.

All improvements within the City of Lincoln will be performed by a contractor licensed in accordance with the California Contractors State License Law, Business and Professions Code Section 7000 et seq.

All persons, firms, partnerships, or corporations doing business of any nature in the City of Lincoln will have a current Business License as stated in Chapter 5.04-License Tax, City of Lincoln Municipal Code. This includes developers, engineers, and contractors.

Refer to the City of Lincoln's Design Criteria & Procedures Manual for design information.

All projects will be in compliance with the State water quality requirements for erosion and sedimentation control at all times.

10-2 **CONNECTION TO EXISTING FACILITIES** - Connection to existing City recycled water facilities will be made only with written approval of the City Engineer.

A. City Engineer has the option of having City personnel make the required system tap. Should the City perform the tap, the cost for the work will be on a time and materials basis and reimbursable to the City.

The Contractor will be responsible for these tasks associated with the tap:

1. Coordinating the work requested with the Director of Public Works/City Engineer and Recycled Water Division. This will include discussions on provisions for materials and equipment required to complete the work and notification to affected residents.

2. Providing an approved traffic control plan and required traffic control, including signage.

3. Providing any necessary lighting.

4. Excavating the work area as directed by the City Engineer including providing any necessary sheeting/shoring, backfilling and compacting the excavation(s) in accordance with City standard detail W-1 upon completion of the tap.

5. Under no circumstances will anyone other than a representative of the City operate valves in a City operated system.

B. The Contractor will be responsible for these tasks associated with the

connection to an existing stub:

1. All connections will take place in the presence of the City Engineer.

2. Connections will be made only after the newly constructed recycled water system has successfully passed all required testing procedures as established in Section 10-13 of these Public Facilities Improvement Standards.

3. **Under no circumstances will anyone other than a representative of the City operate valves in a City operated system.**

4. Dewatering of both the new and existing recycled water mains will prevent foreign matter from entering the system.

5. All material used in the tie-in will be new material and clean of debris.

10-3 **CONSTRUCTION STAKING** - The water main will be staked prior to installation. Staking will provide the station and the offset to the main, as well as the cut to the nearest tenth of a foot, 0.1-foot. Stakes will be provided at a minimum of every 50-feet in tangent sections and every 25-feet in curved sections and every 10-feet in approved vertical curve sections. The City Engineer must be supplied with two sets of cut-sheets prior to construction without exception.

10-4 **TRENCH WORK** - Earthwork required to construct recycled water facilities will be performed to the lines and grades shown on the approved project improvement plans. At all times the trench and the work area surrounding the trench will be kept in a safe manner to adequately protect the public and the workers. The person designated as the project "competent person" will be onsite during all work activity. The specified trench width will be maintained to a height of one-foot over the top of the pipe for all trench wall geometry cross-sections including: vertical walls, steeped vertical walls, V-walls, and combined vertical-V-walls.

Prior to placing bedding, backfill materials, or pipes on the trench bottom subgrade surface, the trench bottom will be: relatively free of loose materials, have a relatively smooth appearance, have a relatively constant grade, and be firm and unyielding.

Refer to Detail RW-1 and Section 10-11 of these Public Facilities Improvement Standards for additional information on trench materials.

A. **Existing Pavement -** When the trench is in an existing surfaced area, the pavement will be sawed or scored and broken ahead of the trenching operations. The pavement will be cut accurately on neat and parallel lines.

Before the final asphalt concrete patch is placed, the edges of the asphalt concrete will be re-sawcut at least one-foot wider than the width of the trench ("T trench") to create smooth parallel edges. All cuts in Portland cement concrete pavements will be sawcut with approved equipment. Trench restorations will conform to Standard Detail H-25.

B. **Water in Trench -** When water is encountered in the trench, the geotechnical engineer will be contacted to provide input to the Engineer. The trench will be kept dry in a manner approved by the City Engineer until the placement of the approved bedding material, laying and jointing of the pipe, and placement of the shading material has been completed and approved. The City will consider, on a case-by-case basis, the use of conventional, in trench, sump dewatering methods provided that the trench is backfilled with washed, crushed rock or equivalent to at least a height of 3-feet higher than the local ground water table or perched water whichever is at a higher elevation. The crushed rock may require wrapping with a geotextile filter fabric depending upon the expected ground water flow velocities. Installation of ground water monitoring wells can be used to determine the elevation of the water table and/or perched ground water.

   The City requires a dewatering system be designed and implemented in all areas where trenches will be excavated and native backfill will be placed below the local ground water table and/or perched ground water. Installation of ground water monitoring wells can be used to determine the elevation of the water table and/or perched ground water. The dewatering system may include, but not be limited to: driven well point screens and vacuum extraction systems, drilled and installed screened wells with submersible pumps or vacuum extraction systems, or other dewatering methods. Use of in trench sumps will not be allowed as the sole dewatering method. The owner's/developer's geotechnical consultant should develop a dewatering work plan for review and approval by the City prior to implementation.

   The manner employed to dispose of water pumped from an excavation will be subject to the approval of the City Engineer and will conform to all water pollution constraints of the City and other agencies. Ground water pumped from the trench will be disposed of in a manner to not cause injury to public or private property, or to constitute a nuisance or menace to the public.

C. **Unsuitable Trench Bottom -** If the bottom of the trench is soft, yielding, or otherwise unsuitable as a foundation for the pipe in the opinion of the geotechnical engineer, or City Engineer, the unsuitable material will be removed to the depth necessary to provide a stable and satisfactory foundation. Three-quarter inch crushed rock will be placed in the trench to provide a stable foundation. The rock is in addition to the required pipe

bedding used in the pipe zone. All rock will be wrapped with geotextile fabric (see Section 3-6, Type “C” material).

D. Open Trench - The trench will be in a safe condition at all times. In roadway areas and locations accessible to the public, trenches will be excavated only as far in advance of pipe laying, as can be backfilled in the same day. In addition, the maximum total length of open trench will be no more than 300-feet ahead of the pipe laying operation, or 200-feet behind the pipe laying operation. A trench in an existing roadway that is not to be regraded is defined as "open” until backfilled to subgrade or the original ground line.

E. Steel Trench Plates - Steel trench plates will not be used over open trench areas without the approval of the City Engineer. All steel plates will be adequately restrained to eliminate shifting. All excavations covered by steel plates will be shored. Temporary asphalt plant mix ("cut-back") at least one-foot in width will be used for a transition on each edge of the plate. "Rough Road" or "Bump" signs will be installed 200-feet on each side before the steel plate. The sign will only be mounted to an operable, lighted barricade for a maximum of 24-hours. The sign will be mounted to a 4-inch x 4-inch post if the placement exceeds 24-hours.

F. Temporary Surfacing - A temporary asphalt plant mix "cut-back" surface not less than 2-inches in thickness will be placed immediately after the top backfill has been completed and compacted. This temporary surface will be maintained at a level surface until removal. The temporary surfacing material will be removed just prior to placing the permanent surface material.

G. Pipe Support - Bedding will provide uniform and continuous support along the barrel of the pipe. The minimum depth of bedding material will be provided under the bell. Blocking of the pipe is not permitted.

H. Trench Width - The trench bottom width to 6 inches above top of pipe will comply with Standard Detail RW-1 or as approved by the City Engineer.

I. Excess Material - Excess material and materials determined unsuitable for backfill by the City Engineer will be removed from the project site.

10-5 **PIPE BEDDING** - Pipe bedding will conform to Standard Detail RW-1 and the following:

A. Bedding will provide uniform and continuous support along the barrel of the pipe. The minimum depth of bedding material will be provided under the bell. Blocking of the pipe is not permitted.

B. Loose material will be removed from the trench bottom and replaced with imported material.

C. Bell holes will be excavated per manufacturer's recommendations. The minimum depth of bedding material will be provided under the bell. Care will be taken to ensure that the bell hole is no larger than necessary to accomplish proper joint assembly.

D. The City Engineer can require cut-off walls (Standard Detail SS-8) if a potential or existing groundwater problem exists and if the bedding and pipe backfill material require it.

10-6 **CONCRETE CRADLES. ARCHES & ENCASEMENTS** - Concrete cradles, arches and encasements will conform to Standard Detail SS-9, and the following:

A. The pipe will be placed in proper position on temporary supports consisting of concrete block or bricks. When necessary, the pipe will be rigidly anchored or weighted to prevent flotation when the concrete is placed.

B. Concrete for cradles, arches or encasements will be placed uniformly along the pipe. Concrete placed beneath the pipe will be sufficiently workable to fill the voids without excessive vibration. The concrete will be allowed to cure and remain undisturbed for a minimum of 24-hours prior to backfill and compaction of the trench.

C. Water will not be permitted to enter, seep or run onto the concrete while curing.

10-7 **PIPE INSTALLATION-** Recycled Water pipe will be installed in accordance with the following provisions:

A. Manufacturer's Recommendations – All installations will follow manufacturer's recommendations unless otherwise noted on the approved plans. The manufacturer's installation guide will be on the job site at all times.

B. Pipe Cleanliness - The Contractor will keep the pipe interior free from foreign materials and in a clean and sanitary condition until acceptance by the City. At times when pipe laying is not in progress, the open pipe end will be sealed with a tight cap or plug to prevent foreign matter from entering the pipe. Plywood, polyethylene film or cardboard is unacceptable. Provisions will apply to the lunch-hour as well as overnight.

C. **Cathodic Protection -** Cathodic protection will be installed as shown on the project plans. Cathodic test station locations will be marked with “CTS” in 2-inch letters in the curb.

D. **Placing Pipe -** Care will be taken when lowering pipe into the trench to protect the pipe from damage. Chains are not permitted. The pipe will be laid carefully to the lines and grades shown without grade breaks, unless designed with such, or to minimum depths shown on the approved plans. If field conditions exist such that the pipe may not be laid to the specified grade, the approved plans will require revisions prior to proceeding with construction.

E. **Joining Pipe -** Pipe sections will be correctly jointed to form a smooth flow line. Care will be taken in placing the pipe and making field joints.

F. **Covering Pipe -** Improvements installed without proper inspection will be exposed and inspected as required by the City Engineer.

G. **Pipe Restraints and Fittings -** Pipes will be mechanically restrained to the length specified in the approved plans, using materials specified herein. Thrust blocks and restraint will be used on all fittings 11.25 degrees and greater. (See Standard Details W-6 and W-6A). Fitting sections will be mechanical and/or flanged fittings with MEGALUG® (EBBA) or approved equal. PVC pipe and straight pipe sections may use grip rings/gaskets. All fittings and appurtenances will maintain a minimum of 18-feet of restrained pipe into the fitting from all directions or as required by the manufacturer’s manual and the approved project improvement plans.

H. **Tracing Wire -** A continuous No. 10 insulated tracing wire will be attached to mains, service lines and appurtenances per the Standard Details and the following:

1. Tracing wire will be continuous between main line valve boxes and fire hydrants.

2. Tracing wires through valve boxes will be placed outside of riser, but inside the box.

3. Tracing wire in manholes and vaults will be attached inside the facility within one foot of the rim.

4. Wire splices will be located above ground and inside of valve boxes and made per Standard Detail RW-3.

I. **Pipe Protection Marking -** A 12-inch wide, purple plastic non-detectable recycled water backfill tape marked "Recycled Water Main Below", will be placed in mainline trenches, 18-inches deep in non-road areas and 24-inches deep in road areas.

Separate from the backfill tape, all recycled water mains other than purple PVC will be installed with recycled water warning tape. The plastic warning tape will be prepared with black printing on a purple field, having the words "CAUTION: RECYCLED WATER LINE- DO NOT DRINK". The overall width of the tape will be 3-inches. The warning tape will be installed directly on top of the pipe, longitudinally and centered. The warning tape will be installed continuous for the entire length of the pipe and will be fastened to each pipe length by plastic tape banded around the pipe with fasteners no more than 5-feet apart. Taping attached to the sections of the pipe before laying in the trench will have flaps sufficient for continuous coverage. All risers between the main line and control valves will be installed with warning tape.

Mains in unpaved areas will be marked every 150-lineal foot with a purple composite utility marker having a decal stating: "Caution Recycled Water Pipeline". Appurtenances (valves, ARVs, test stations, etc.) and angle points will also be marked. Mains in landscaped areas will be delineated with a brass marker set in an 8-inch concrete cylinder. The brass marker will state "City of Lincoln Recycled Water Main".

J. **Polyethylene Protection -** All underground metal (ductile iron, valves, fittings, copper, brass, etc.) will be wrapped in 8-mil minimum thickness polyethylene encasement.

K. **Polyvinyl Chloride (PVC) Pressure Pipe Installation -** PVC will be installed in accordance with the AWWA Manual M23, AWWA C907, and the manufacturer's recommendations, except as otherwise provided herein:

1. PVC Pipe will have been manufactured within an 18-month period prior to installation. All pipe to be made in U.S.A.

2. Pipe and gaskets will be kept clean and protected against sunlight and heat damage.

3. Pipe showing signs of physical damage or excessive ultraviolet exposure will be rejected and will be immediately removed from the job site.

4. The pipe will be installed with the manufacturing label showing on the top.

5. The reference mark or stab line on the spigot end must be flush with the bell end and visible for inspection.

6. The beveled end of the pipe will be cut off before placement into a mechanical joint.

L. Ductile Iron Pipe (DIP) - DIP will be installed in accordance with the standards for "Installation of Ductile Iron Water Mains and Their Appurtenances" (ANSI/AWWA C600) and the manufacturer's recommendations, and as provided herein:

1. All DIP will be polyethylene encased in accordance with these Public Facilities Improvement Standards and the standard for "Polyethylene Encasement for Ductile-Iron Piping for Water and Other Liquids" (ANSI/AWWA C105/A21.5). Polyethylene encased pipe will be bedded and backfilled with Type A material 12-inches above the crown of pipe.

2. At the direction of the Director of Public Works/City Engineer, the Contractor will repair damages to the polyethylene encasement as described within ANSI/AWWA C-105/A21.5 or will replace all damaged polyethylene film sections.

3. DIP cuts will be coated with an acceptable bituminous material.

M. Transitions -Transitions between DIP and PVC will be made as follows:

1. A PVC pipe spigot may be inserted into a DIP bell by cutting off the PVC bevel on the spigot and leaving no more than a ½-inch taper

2. Transitions may be made by the use of a DIP repair sleeve.

N. Borings - Borings for installation of recycled water lines will be made as follows:

1. The equipment, method and sequence of operation and conductor pipe grades will be approved by the City Engineer. A minimum of 48-hours' notice will be given prior to the start of work, without exception.

2. Excavation for the boring operation will be the minimum necessary to satisfactorily complete the work. Bracing and shoring will be adequate to protect workers and any adjacent structure or roadbed.

3. The conductor will closely follow the boring operation. The bored hole will not be more than 0.10-foot larger in diameter than the outside diameter of

the conductor. Guide rails will be accurately set to line and grade to ensure installation of the conductor within allowable limits. The conductor diameter will be sufficient to allow adjustment of line and grade of the conducted pipe to meet allowable tolerances and to allow sand to be placed between the conductor and the conducted pipe.

The inside diameter of the conductor will be a minimum of 10-inches larger than the outside diameter of the conducted bell pipe or joint, as approved by the City Engineer. A minimum of 4-inches of clearance will be required between the conducted pipe and the casing, taking the skids into consideration.

4. Conducted pipe will be supported by a minimum of three sets of synthetic skids per stick of pipe, or as required by the City Engineer. Pipe sections will be joined outside of the conductor. The skids and casing entrance will be lubricated prior to sliding the conducted pipe into place. The height of the skids may be adjusted to meet specified grades.

5. The space between the conducted pipe and conductor will be completely filled with clean, dry silica sand, blown into place. The method of placing sand in the void will be approved by the City Engineer. Both ends of the casing will be plugged with non--shrink grout a minimum of 12-inches into the casing.

6. Whenever, in the opinion of the Developer's design or geotechnical engineer, the nature of the soil indicates the likelihood of ground loss which would result in a greater space between the outer surfaces of the conductor than allowed, the Contractor will take immediate steps to prevent such occurrences by installing a jacking head extending at least 18 inches from the leading edge of the conductor.

The jacking head will cover the upper two-thirds of the conductor and project not more than ½-inch beyond the conductor outer surface. Excavation will not be made in advance of the jacking head. Voids greater than allowable will be filled with sand, soil cement, grout, or as approved by the City Engineer. Where voids are suspected, the design or geotechnical engineer may direct the contractor to drill the conductor, to pressure inject grout to refusal and repair the drilled hole. Grouting pressure will not exceed 50-psi at the nozzle.

10-8 **<u>SERVICE INSTALLATION</u>** - Recycled Water services will be installed in accordance with manufacturer's recommendations, the Standard Details and with the following provisions:

A. **Service Runs -** Services will be continuous from the main line to the service box. Bends in copper tubing will be made in a manner that does not crimp or flatten the tubing.

B. **Saddles -** Taps, service saddles, tees, joints, and fittings attached to mains will be separated by a minimum of 24-inches. Service saddles will be wrapped in 8-mil minimum thickness polyethylene and backfilled with Type "A" backfill, or other approved material by the City Engineer. Service saddles will be installed with zinc caps on all bolts, per these Public Facilities Improvement Standards.

C. **Warning Tape -** Recycled water services will be installed with recycled water warning tape per Section 10-7 of these Standards.

D. **Service Manifolds -** Service manifolds will be constructed per the following criteria:

1. Where a service line is extended a distance greater than 40 feet, a construction jumper will be installed per Detail W-19 of the City of Lincoln Public Facilities Standards. The new service line and manifold will be tested in accordance with Section 10-13 of these Public Facilities Improvement Standards and AWWA C651.

   Where a service line is extended a distance less than 40-feet, the extension will be cleaned, swabbed with chlorine and flushed in the presence of the City Engineer. The new service line and manifold will be pressure tested in accordance with Section 10-13 of these Public Facilities Improvement Standards and AWWA C651.

   In both cases, the installation will be fully restrained by an approved restraint system, starting at the main and as required by the approved project improvement plans.

2. Services outside of paved sections will be ductile iron.

3. No recycled water will be drawn through a service prior to installation of the water meter.

E. **Telemetering -**Telemetering conduit will be installed in accordance with these Public Facilities Improvement Standards, the Uniform Electric Code and as required by the City Engineer.

F. **Curb Marking -** The curb in front of recycled water services will be stamped with a "RW" (2" in size).

10-9 **SERVICES ABANDONMENT** - All recycled water services requiring abandonment will be disconnected from the main line at the corporation stop unless otherwise approved by the City Engineer.

10-10 **APPURTENANCES INSTALLATION** - All appurtenances, including but not limited to blow-offs, sample stations, air release valves and meters will be installed in accordance with manufacturer's recommendations, these Public Facilities Improvement Standards and these provisions:

A. Underground Protection- All valves, fittings, DIP, copper and underground brass will be wrapped in an 8-mil minimum thickness polyethylene encasement. Damaged or scratched surfaces on epoxy coated valves and appurtenances will be repaired with an epoxy repair kit per manufacturer's recommendations and to the satisfaction of the inspector prior to wrapping, without exception.

"Sap Seal" caps will be placed on all buried nuts and bolts. Longer bolts (5 inches minimum) may be required to accommodate the caps. In situations where a longer bolt cannot be installed due to the configuration of the appurtenance, and with the City Engineer's approval, the bolt will be coated with an "anti-seize" product prior to installation. After the nut, has been tightened into place, the nut and bolt will be completely coated with an acceptable bituminous coating. Additionally, where sap seal caps cannot be used, all buried nuts and bolts will be coated with a bituminous coating. This includes exposed bolts found on a manufactured appurtenance (i.e., valve bonnets, etc.)

B. Gate Valves - Gate valves will be centered in a one-piece riser stock. On valves where the operating nut exceeds 36-inches in depth from final grade, an operator nut extension 24 inches minimum in length will be installed. (See Standard Detail RW-3)

C. Warning Markings - All appurtenances will be marked with warning tags, signs, and/or purple paint as indicated on the approved plans.

D. Dead End Lines - Dead end lines, permanent and temporary, will have a blow off constructed per Standard Detail RW-5 and RW-6.

E. Insulation - Insulating kits will be installed at transitions between dissimilar metal pipes per these Public Facilities Improvement Standards and as required by the City.

10-11 **PIPE BACKFILL QA/QC** - Pipe zone backfill will conform to Standard Details RW-1, RW-2, these Improvement Standards. Construction quality assurance and quality control (QA/QC) of all utility trench backfill will be performed by the owner's/developer's geotechnical engineering consultant. A performance-based QA/QC specification will be developed and used for placement and compaction of all non-testable trench backfill materials. A design based QA/QC specification will be used for placement and compaction of all testable trench backfill material.

A. Performance Based QA/QC (Non-Testable Materials) - Non-testable trench backfill materials generally consist of locally derived mixtures of cobbles with a sandy matrix and/or breccia (volcanic rock) with a sandy matrix. These non-testable backfill materials should have a maximum particle size of 6-inches (greatest dimension). Use of non-testable trench backfill materials will be approved by the City on a case-by-case basis.

A performance-based specification criteria will be used to evaluate the suitability of placed and compacted non-testable trench backfill materials. The property owner's/developer's geotechnical engineering consultant must prepare a work plan that describes a proposed site-specific performance-based specification for review and approval by the City prior to commencement of work. The work plan must include, but not be limited to:

1. Maximum loose lift (layer thickness) prior to compaction.

2. Moisture content range to be achieved prior to compaction.

3. Minimum number of passes and coverage of specified compaction equipment.

4. Specified compaction equipment to be used.

B. Design Based QA/QC (Testable Materials) - Testable trench backfill materials generally consist of on-site native earth materials and imported earth materials that can be classified as soils according to the American Society for Testing and Materials (ASTM) Unified Soils Classification System guideline procedures (ASTM D2487 and D2488). These soil materials can be easily tested to determine if they meet the project design based QA/QC specifications for percent relative compaction by the following ASTM test methods:

ASTM D1556, Standard test method for in place density and unit weight of soil and soil-rock mixtures by the Sand-Cone Method.

ASTM D2922, Standard test method for in place density and unit weight of oil and soil-rock mixtures by the Shallow Depth Nuclear Method.

ASTM D3017, Standard test method for in place water content of soil and soil-rock mixtures by the Shallow Depth Nuclear Method.

C. **Trench Backfill Material -** The City requires designed based construction QA/QC testing and observation services to be performed by the owner's/developer's geotechnical engineering consultant to document that trench backfills meet or exceed the minimum material properties and minimum relative percent compaction requirements of the City specifications. The trench backfill material types, and relative percent compaction for recycled water main are presented below.

1. **Type "A" Material:** 3/8 inch minus imported screened sand with a minimum sand equivalent of 50 per CTM 217. All gradations are to be approved by the City prior to construction.

2. **Type "B" Material:** Class 2 Aggregate Base Rock per Caltrans Standard Specifications.

3. **Type "D" Material:** Crushed rock or soil-rock mixture (native) not to exceed 3 inches. Up to a 6 inch minus material may be used with special considerations and conditions approved by the City and Geotechnical Engineer. The material will be completely free of wood, roots, or other deleterious materials. Material not to be used within 24-inches of top of pipe without City Engineer's approval. Compaction will be by vibratory equipment or other approved devices. The City may require that the material be screened. A layer of geotextile fabric will be placed between the pipes and intermediate backfill zone. Material will only be used with geotechnical engineer's recommendation and with approval of the City Engineer.

D. **Pipe Zone Backfill -** Extreme care will be taken when consolidating the backfill around the pipe zone. For pipe 12-inches in diameter and smaller, no more than one-half of the pipe will be covered prior to shovel slicing (forcing rock backfill into the lower quadrants of the pipe) For pipe greater than 12-inches in diameter, no more than 6-inches will be covered prior to shovel slicing. Sufficient care will be taken to prevent movement of the pipe during shovel slicing. Shovel slicing will be witnessed by the City Engineer prior to shading the pipe. Proposed bedding, hunching and initial backfill (pipe backfill) materials will be approved by soils engineer and submitted to the Engineer with sieve analysis and sand equivalent test results. California Test

Methods will include 216, 217, 301, and 302. Compaction equipment will not make direct contact with the pipe.

E. Compaction Test Methods- The percent relative compaction of all testable trench backfill soil will be determined by a combination of the following ASTM test methods:

ASTM D1557, Modified Proctor Compaction Curve.
ASTM D1556, In-place Soil Density By The Sand Cone Replacement Method.
ASTM D2216, Soil Moisture Content by the Convection Oven Method.
ASTM D2922, In-place Soil Density by Nuclear Method.
ASTM D3017, In-place Soil Moisture Content by Nuclear Method.
ASTM D4643, Soil Moisture Content by the Microwave Oven Method.
ASTM D4959, Soil Moisture Content by the Direct Heating Method.

F. Testing Frequencies - All field testable trench backfill materials, that are classified according to the Unified Soils Classification System using ASTM D2487 and D2488 procedures as CL, ML, SC, SM, GC, GM, GP and GW by ASTM tests D422 (Particle Size Gradation) and D4318 (Atterberg Plasticity Indices), should be tested for percent relative compaction using a minimum frequency of one compaction test per maximum 12-inch-thick loose lift (layer) per 250-linear-feet of trench length or material change, whichever condition requires the greatest number of tests. Generally, minimum requirements include 12-inch loose lifts; moisture conditioned to at or above optimum moisture and compacted with 8 to 10 passes by a sheepsfoot wheel mounted on a Cat 225 or equivalent. In special circumstances, the City may require other compaction equipment combined with thinner lifts.

All field testable trench backfill materials, that are classified according to the Unified Soils Classification System using ASTM D2487 and D2488 procedures as Cl, CH, Land MH by ASTM tests D422 (Particle Size Gradation) and D4318 (Atterberg Plasticity Indices), should be tested for percent relative compaction using a minimum frequency of one compaction test per maximum 12-inch-thick loose lift (layer) per 100-linear-feet of trench length or material change, which ever condition requires the greatest number of tests.

10-12 <u>ON-SITE RECYCLED WATER FACILITIES</u> - Private, on-site recycled water systems will conform to additional specifications below:

A. Inspections - If the on-site system is installed prior to plan approval and/or inspection, any and all portions of the systems will be exposed, inspected and corrected as directed by the City Engineer. Failure to comply will result in

termination of service. Plan changes or field modifications will be reviewed and approved by the City Engineer prior to installation.

B. **Coverage Test for On-Site Irrigation Systems -** The Owner/Developer will be responsible for controlling overspray and runoff on new systems or systems requiring conversion. To ensure that overspray or runoff is in accordance with the Department of Health Services regulations, inspection by the City Engineer is required. City Engineer is to be contacted for a coverage inspection test upon completion of the landscaping improvements involving use of recycled water.

   The Owner/Developer or representative will attend the coverage test and will have someone attend capable of making minor adjustments to the sprinkling system. All modifications and costs are the responsibility of the Owner/Developer.

   The Owner/Developer will be notified in writing of modifications to the system which could not be made during the coverage test. Such modifications will be made in a timely manner. Failure to make timely modifications will result in termination of service.

C. **Controller Charts -** Controller charts will be prepared by the Owner/Developer, approved by the City Engineer and then placed in the controllers prior to start of service. Failure to provide controller charts, or removal of charts from the controller will result in termination of service. Controller charts will be prepared as set forth herein:

   1. Provide one controller chart for each automatic controller, showing the area covered by the controller. The chart will be the maximum size the controller door will physically allow.

   2. The chart will be a reduced size drawing of the actual as-built system. The line weights and lettering on the original controller chart drawing will be drawn so that the reduced chart is clearly legible.

   3. The chart will be a black line print, with a different color used to show the area of coverage provided by the controller.

   4. When completed and approved, the charts will be hermetically sealed between two pieces of plastic, each plastic piece being a minimum of 10 mils thick.

D. **Conversion from a Potable System to Recycled Water Supply -** The facilities to be converted will be investigated in detail, including review of any

record drawings, preparation of required reports, findings and determinations by the City Engineer of measures necessary to bring the system into full compliance with these Public Facilities Improvement Standards. The Owner/Developer will pay all costs associated with converting the system.

E. **Conversion from a Recycled Water System to Potable Water Supply -** If it becomes necessary to convert from a recycled water system to a potable water system, it will be the responsibility of the Owner/Developer to pay all costs associated with the conversion, including but not limited to the following items:

1. Isolation of the recycled water supply - Service will be removed and plugged at the main, or abandoned in a manner approved by the City Engineer.

2. Installation of approved backflow devices on all meter connections.

3. Removal of recycled water quick couplers and replacement with approved potable water quick couplers.

4. Notification to all personnel involved.

5. Removal of all above ground warning labels.

6. Installation of potable water lines, as necessary. Potable water connection fees will be paid prior to installation. Any previously paid recycled water connection fees will not be credited toward potable water connection fees.

7. Any other provisions necessary to meet City Water System Design and the Public Facilities Improvement Standards at the direction of the City Engineer.

F. **On-Site Pipe Identification -** All buried on-site recycled water piping will be purple colored (Pantone 522) PVC with stenciling identifying it as recycled water in accordance with the AWWA manual, "Guidelines for the Distribution for Non-Potable Water". The pipe will be installed with the manufacturing label on top. Markings will be as specified in Section 10-7 of these Public Facilities Improvement Standards, and as modified:

1. Alternate pipe with warning tape, as specified below, will be accepted as an alternative to stenciled purple colored PVC pipe only on a project-by-project basis, with prior written approval from the City Engineer.

2. The plastic warning tape will be prepared with black printing on a purple field, having the words "CAUTION: RECYCLED WATER LINE - DO NOT DRINK/ AVISA - AGUA IMPURA - NO TOMAR". The overall width of the tape will be 3-inches. The warning tape will be installed directly on top of the pipe, longitudinally and centered. The warning tape will be installed continuous for the entire length of the pipe and will be fastened to each pipe length with plastic tape banded around the pipe with fasteners no more than 5-feet apart. Taping attached to the sections of the pipe before laying in the trench will have flaps sufficient for continuous coverage. All risers between the main line and control valves will be installed with warning tape.

G. **Quick Coupling Valves -** Quick coupling valves will conform to the following:

1. **Recycled Water-** Quick coupling valves used for recycled water systems will be constructed of brass with purple rubber or vinyl cover and will have a ½-inch or 1- inch inlet.

   a. The cover will have a warning label, permanently stamped or molded into the cover, stating:

      - RECYCLED WATER
      - DO NOT DRINK/ AVISA - AGUA IMPURA - NO TOMAR

2. **Potable Water -** Quick coupling valves used in potable water systems will have a cover made of brass, metal or yellow rubber or vinyl. Quick coupling valves intended for recycled water use will not be used on potable water systems.

H. **Sprinklers -** All sprinklers used for on-site recycled water systems will have exposed surface colored purple. The exposed surface will be colored purple through the use of dyed plastic. The exposed surface will also to display either a molded or hot stamped warning, stating "DO NOT DRINK/ AVISA - AGUA IMPURA - NO TOMAR" along with an international warning symbol cautioning against drinking the water emitted through the sprinkler or an identification tag conforming to these Public Facilities Improvement Standards.

   Sprinkler risers and swing joints will be identified with purple adhesive 3- inch x 3-inch labels. Each label will state "RECYCLED WATER - DO NOT DRINK/ AVISA - AGUA IMPURA- NO TOMAR.

I. **Warning Labels -** Controller panels, wash down or blow-off hydrants on water trucks and temporary construction services may require installation of

warning labels, as directed by Director of Public Works/City Engineer. The labels will notify that the system contains recycled water that in unsafe for drinking purposes. Warning labels and signs will be developed and supplied in accordance with Title 22.

J. Valve Boxes, Meter Boxes and Tags

1. **Valve and Meter Boxes -** Valve boxes will meet the following requirements:

   a. All gate valves, manual control valves, electrical control valves, pressure relief valve for on-site recycled water systems will be installed below grade in a purple valve box with a lid identifying use of recycled water.

   b. Electrical and manual control valve boxes, and meter boxes will have a warning label permanently stamped or molded into the lid with rivets or bolts. Warning labels will be constructed of a purple weatherproof material with the warning permanently stamped or molded into the label. The warning will contain the following information:

   - RECYCLED WATER
   - DO NOT DRINK/ AVISA - AGUA IMPURA - NO TOMAR

2. **Valve and Meter Tags -** All recycled water sprinkler control valves and meters will be tagged with identification tags conforming to the following:

   a. Tags will be weatherproof plastic, 3-inch x 4-inch, purple background with permanent black lettering, stating “WARNING – RECYCLED WATER - DO NOT DRINK" imprinted on one side and "AVISA - AGUA IMPURA - NO TOMAR" on the other side.

   b. One tag will be attached to each valve as follows:

   - Attach to valve stem directly or with plastic tie wrap, or;
   - Attach to solenoid wire directly or with plastic tie wrap, or;
   - Attach to valve cover with existing valve cover bolt.

K. On-Site Recycled Water Piping - All on-site recycled water piping will be installed in accordance with the Uniform Plumbing Code and all other local governing codes, rules and regulations. All piping will be continuously and permanently marked with the manufacturer’s name or trademark, nominal size and schedule or class indicating the pressure rating.

1. **Minimum Requirements of Piping and Fittings -** The minimum class or schedule of piping and fitting will be as follows:

   a. Cast-iron fittings for ACP: ANSI 21.10 and AWWA C110

   b. Galvanized steel: Schedule 40, mild steel screwed pipe

   c. Galvanized malleable iron fittings: ANSI B-16.3.1

   d. Hard drawn copper Type K: ANSI H-26.1 and ASTM B 88

   e. Wrought copper or bronze solder fittings: ANSI B.16.22

   f. All PVC constant pressure pipe will be as follows:

   - Schedule 40 for lines 4-inches in diameter and smaller
   - C900 Class 200 or schedule 80 for lines 6-inches through 12-inches in diameter.
   - C905 Class 165 for lines larger than 12-inches.

   g. PVC intermittent pressure lateral line piping: Schedule 40 or Class 200

   h. PVC fittings: PVC Schedule 40 solvent weld and factory manufactured or Schedule 40 with rubber-ring joint. PVC schedule 80 solvent weld and factory manufactured or schedule 80 with rubber ring joint.

   - Tubing for drip irrigation systems: Manufactured from virgin polyethylene conforming to ASTM D 1248, Type Ii, Class C.
   - Ductile-iron fusion bonded epoxy coated: Class 350 AWWA C116

2. **PVC Piping -** PVC pipe and fittings will conform to the following:

   a. PVC plastic pipe and fittings will be installed below grade.

   b. All PVC pipe will be made from NSF-approved Type I, Grade I compound conforming to ASTM D1784.

   c. All PVC Schedule 40 and Schedule 80 pipe will be manufactured conforming to ASTM D1785 and D2466 and will meet requirements set forth in Federal Specifications PS-21.

d. All PVC Class 200 solvent weld and Ring-tight pipe will be manufactured conforming to ASTM D 2241 and meet requirements set forth in Federal Specification PS-22 with Standard Dimension Ration (S.D.R.) for pressure rated pipe. Pipe will be extruded from approved Class 12454-PVC with resin specifications conforming to ASTMD 1784 and rubber rings conforming to ASTM D169.

e. All PVC C900 and C905 will be manufactured conforming to ASTM D2241. Pipe will be extruded from approved Class 12454 PVC with resin specifications conforming to ASTM D1784 and rubber rings conforming to ASTM F477.

f. All pipe will be homogenous throughout, free from visible cracks, holes or foreign materials. The pipe will be free from blister, dents, wrinkles, ripples, die and heat marks. All piping will be manufactured per NSF specifications.

g. All PVC plastic pipe fittings will be rigid PVC virgin Type I, minimum schedule 40 with working pressure no lower than that of the pipe. Sockets will be tapered to conform to the outside diameter of the pipe, as recommended by the pipe manufacturer. All schedule 40 fittings will conform to ASTM D2466. All schedule 80 fittings will conform to ASTM D2464 and D2467.

h. All fittings will be injection molded of an approved PVC fitting compound featuring high tensile strength, high chemical resistance and high strength. The compound must meet the requirement described in ASTM D1784 and D2466, cell classification 13454B. Where threads are required for plastic fittings, they will also be injection molded. All tees and ells will be side gated.

- PVC solvent cement will conform to ASTM D2564.

L. On-site Potable Water Piping - All potable water piping installed within the same project as the on-site recycled water piping will be installed in accordance with the Uniform Plumbing Code and all other local governing codes, rules and regulations, and will also conform to the following provisions:

1. The pipe will be continuously and permanently marked with the manufacturer's name or trademark, nominal size and schedule or class indicating the pressure rating.

2. All potable water piping will have a blue plastic tape identifying it as a potable water line. Potable water warning tape will be a minimum of 3 inches wide and will run continuously for the entire length of each line. The tape will be attached to the top of the pipe with nylon tie-wrap banded around the warning tape and the pipe every five feet on center. Warning tape for the potable water piping will be blue in color with the words "CAUTION: POTABLE WATER LINE" imprinted in minimum 1 inch high black letter. Imprinting will be continuous and permanent.

10-13 **TESTING PROCEDURES -** Testing of the recycled water system may proceed only after joint utility crossings are completed, the sewer mains and services have passed pressure test and TV inspection, and sub grade elevations have been met. Testing prior to sub grade placement may be subject to additional pressure tests at the discretion of the City Engineer.

Tests and procedures for recycled water systems to be accepted and maintained by the City will consist of items A through D below:

A. Pressure Test in accordance with AWWA standards (C605 for PVC, C600 for DIP) and the following:

1. Contractor will verify with the City Engineer that all system valves are open prior to testing.

2. The use of test plates will be approved by the City Engineer on a case-by-case basis.

3. The City Engineer will be present during the duration of the test.

4. Tests shall be performed only after the pipeline has been properly filled, flushed, and purged of air. No more than 0.5% of the line volume in additional water will be required to raise the test pressure from 0 to 150-psi.

5. The hydrostatic test pressure shall not be less than 1.25 the maximum anticipated sustained working pressure at the highest point along the test section unless the pressure exceeds the design pressure limit for any pipe, thrust restraint, valve, fitting, or other appurtenance of the test section. In no case shall the test pressure exceed the design pressure limit for any pipe, thrust restraint, valve, fitting, or other appurtenance of the test section.

6. The test gauge will be liquid filled and capable of testing up to 300-psi.

7. No detectable leakage is allowed.

8. A mandatory 72-hour notice is required prior to any testing procedures.

B. Tying into the City System - The recycled water system may be tied into the City system upon completing and passing all the testing procedures. Tie-ins will be conducted as specified in Section 10-2 of these Public Facilities Improvement Standards. After the tie-in has been made, the Contractor will flush the segment tied-in, to the approval of the City Engineer.

C. Continuity Testing – Contractor will test continuity of the tracing wire with standard locating equipment in the presence of the City Engineer or his/her designated representative. Discontinuity in the tracing wire will be repaired. It is recommended that the Contractor perform continuity testing after subgrade is made, but before asphalt is placed. Final continuity testing will take place after asphalt is placed and all valve boxes are raised

D. Cross-Connection Testing - Testing for cross-connections will be in accordance with the Uniform Plumbing Code, prior to use.

1. Private System (On-Site) - Tests and procedures of recycled water systems for private use and maintenance will conform to the following as described above.

   Pressure Testing - On-site testing will be the same procedure as off-site test except the test pressure will be 100- psi.

10-14 <u>REPAIRING INSTALLED IMPROVEMENTS-</u> All PVC and DIP recycled water mains will be repaired by the following procedures:

A. Damaged or failed pipe sections will be removed and replaced with new pipe in the presence of the City Engineer. Replacement can be accomplished by the use of City approved ductile iron mechanical joint repair sleeves. Pipe restraints and thrust blocks will be required on all bends.

B. After the repair has been completed, the excavation will be backfilled and compacted to grade as specified. The repairs will then be re-tested per these Public Facilities Improvement Standards.

C. At the direction of the City Engineer, the Contractor will repair damage to the polyethylene encasement as described within ANSI/AWWA C105/A21.5 or will replace all damaged polyethylene film sections.

10-15 **PUNCH LIST PROCESS -** When the Contractor feels all improvements are substantially complete, a punch list of final outstanding items may be requested.

10-16 **MATERIALS**

A. Approved Equal - The words "approved equal" will mean any material deemed by the City to be acceptable for use within the City's recycled water system as compared to products of specified manufacturers. Specifications for all materials (submittals) to be used on the project will be submitted to the City prior to start of construction. The submittal will include a letter with:

1. **Product -** A description of the product and the appropriate materials specification section number, including description of use.

2. **Contact -** The name and telephone number of the contact person for the proposed product.

3. **Reference -** A list of other agencies who are using the proposed product (Including names and telephone numbers).

   Address the letter to the City Engineer. City staff may request a sample of the product for review. The Contractor will submit all material for review 35-days prior to contract award. All submittals will include documentation verifying contract award date. Contractors will allow 2 to 4 weeks review time by the City.

B. Unapproved Materials - Materials not approved for use on the project will be removed from the site within 24-hours if requested by the Director of Public Works/City Engineer.

C. Recycled Water Main - Unless noted on the approved plans, all recycled water mains will be either Polyvinyl Chloride Pressure Pipe (PVC) or Ductile Iron Pipe (DIP).

1. **PVC Pressure Pipe -** PVC Pressure Pipe will be manufactured to a minimum Class 200 rating and will conform to the "Standard for Polyvinyl Chloride (PVC) Pressure Pipe, 6-inches through 12-inches, for Water" (AWWA C900), and will also include the following:

   a. PVC Pressure Pipe will be purple in color with stenciling identifying it as recycled water in accordance with AWWA manual "Guidelines for the Distribution of Non-Potable Water" and will have been manufactured within 18 months of installation. The pipe will be manufacturer date coded, and the City is to be provided the

manufacturer's coding for translation. Sun damaged pipe may be rejected at the City Engineer's discretion. Markings on the PVC pipe will be placed continuously on two sides of the pipe and will include:

- "CAUTION: RECYCLED WATER - DO NOT DRINK/ AVISA - AGUA IMPURA - NO TOMAR"
- The pressure rating of the pipe, in pounds per square inch (psi).
- The ASTM designation

b. Rubber rings will conform to the "Standard Specifications for Elastomeric Seals (Gaskets) for Joining Plastic Pipe" (ASTM F477).

c. Approved PVC Pressure Pipe manufacturers include: Certain Teed Certa Lok, Diamond Plastics Corporation, JM Eagle, Vinyl Tech, or approved equals. (All pipes will be made in USA)

2. **Ductile Iron Pipe -** DIP will be Class 350 and manufactured to conform to the standards ANSI/AWWA C150/21.50 thickness design of ductile-iron pipe and to "Ductile Iron Pipe Centrifugal Cast in Metal Molds or Sand-Lined Molds for Water and Other Liquids" (ANSI/AWWA C151/A21.51) and will be made in USA and will also include the following:

a. DIP shall be cement mortar lined in accordance with the standard for "Cement Mortar Lining for Ductile Iron Pipe and Fittings for Water" (ANSI/AWWA C-104/A21.4).

b. Approved DIP manufacturers include: Pacific States, Tyler, US Pipe, or approved equals. (All pipe will be made in USA)

D. Services

1. **Copper Tubing -** Copper tubing will be seamless, annealed copper tube and will conform to ASTM B88 "Standard Specification for Seamless Copper Water Tube" and will be Type K Copper will be grade UNS-C122200. For 1-inch diameter, use Type K Rolled Soft Copper. For diameters ranging from 1.25-inch to 2-inches, use Type K Soft 20-foot Sticks. Approved tubing includes: Cambridge-Lee, Mueller Streamline, or approved equal.

2. **Brass Material**

a. **Brass pipe -** Brass pipe will conform to ASTM B43. Listings of approved pipes include: Cambridge-Lee, and Federal WW-351, or approved equal.

b. **Brass fittings -** Brass fittings will conform to ANSI Standard B16.15, B16.24, B2.1, and T-94-1 and be a minimum of Class 125. A listing of approved manufacturers includes: Lee Brass, Merritt Brass, or approved equal.

c. **Brass fittings for Copper Tubing -** A listing of approved manufacturers for brass fittings for copper tube includes: Jones, Mueller or approved equal. Parts reference numbers are shown below: (see Standard Detail RW-7).

1. Jones (1-inch through 2-inch):

Jones Super Grip CTS X CTS	E-2609SG
Jones Super Grip CTS X MIP	E-2605SG
Jones Super Grip CTS C FIP	E-2607SG
Comp. x Comp. (2" only)	E-2609SG

2. Mueller (1-inch through 2-inch):

H-15403N	CTS x CTS
H-15451N	CTS x FIP
H-15428N	CTS x MIP

3. **Corporation Stops**

Corporation stops will be male, iron pipe thread by compression, insulated and full throat ball valve design. A corporation stop will be installed at the water main for all service laterals two inches and smaller. Approved manufacturers of corporation stops include: Mueller, Jones, Ford, or approved equal. Part reference numbers are as shown below: (refer to Standard Detail W-3).

1. Mueller: Part #B-25008N (CC X CTS)
Part #B-25028N (IP X CTS)
Part #B-35028N (MIP X CTS)

2. Jones: Part #E1991 (MIPXCTS SG)
Part #E1993 (MIPxFIP)
Part #E1935SG (MIP X 110CTS)
Part #E1937SG

3. Ford: Part #FB 1700 (for ARV's and Blowoffs)

4. Curb Stops

a. Approved curb stop manufacturers include: Jones, Mueller, or approved equal. Part reference numbers are shown below: (refer to Standard Detail W-4):

1. Jones: Part #J1921WSG (110 CTS X FIP w/ lockwing)
2. Mueller: Part #B-25166N (Flared X FIP w/ lockwing)

5. Dielectric Tape - Approved manufacturers for dielectric tape include Polyken #932 Hi-Tack joint wrap tape or approved equivalent flexible dielectric tape.

6. Service Saddles

a. PVC Pressure Pipe Service Saddles manufacturers include: Jones, Mueller, or approved equal. Part reference numbers are as indicated below.

1. Jones: 4-inch through 12-inch saddles with 1-inch through 2-inch tap, Part #J-996

2. Mueller:

Saddle Size	Part #
4-inch	H13490
6-inch	H13491
8-inch	H13492
10-inch	H13493
12-inch	H13494

b. DIP Service Saddles manufacturers include: Jones, Mueller, or approved equal. Part reference numbers are as indicated below:

1. Jones (4-inch through 12-inch saddles with 1-inch through 2-inch taps): Part # J-979

2. Mueller 1-inch through 2-inch taps:

Saddle Size	Part #
4-inch	BR2B0474IP_ _ _*
6-inch	BR2B0684IP_ _ _*
8-inch	BR2B0899IP_ _ _*
10-inch	BR2B1104IP_ _ _*
12-inch	BR2B1314IP_ _ _*

* The last three numbers denote tap sizes
(0.75”=075, 1”=100, 1.50”=150, 2”=200)

E. Appurtenances

1. **Air Release Valves -** Air release valves will be fusion bonded epoxy coated (per AWWA C116), vacuum break type. A listing of approved manufacturers includes: Crispin, Val-Matic, or approved equal. Part reference numbers are as shown below:

Crispin	Part #	Val-Matic	Part #
1-inch	UL10	1-inch	201C-M
2-inch	UL20	2-inch	201C-M
3-inch	UL31	3-inch	201C-M
4-inch	UL41	4-inch	201C-M
6-inch	UL61	6-inch	206C-M
8-inch	UL81	8-inch	206C-M

2. **Blocking for Boxes -** A listing of approved materials includes: Concrete Stone 9-inch x 1-inch x 16-inch, Slump Block 3-inch x 3-inch x 16-inch, standard concrete brick, or approved equal.

3. **Blow Off -** Approved manufacturers and products include: Kupferle, Eclipse #78 (2-inch) or approved equal.

4. **Fittings**

   a. **Fittings for PVC Pipe** - Unless otherwise specified or shown on the approved plans, all fittings to be used with PVC Pressure Pipe will conform to the standard for "Ductile Iron Compact Fittings for Water and Other Liquids" (ANSI/AWWA C153/A21.53). Approved fitting manufacturers include Tyler and US Pipe. (All fittings will be USA made).

      1. All ductile iron fittings will be coated with an 8 mil nominal thickness fusion bonded epoxy conforming to the requirements of ANSI/AWWA C550 and C116/A21.16

2. All fittings will be wrapped in accordance with these Improvement Standards.

3. The Contractor may use a ductile iron mechanical joint flange adapter designed for AWWA C900 pipe with connecting PVC Pressure Pipe to flanged fittings or flanged valves. Pipe ends must be cut smooth and square with no bevel. The joint will be restrained to the PVC pipe using an approved restraint method, such as the Romac 600 Series Pipe Restraining System.

b. **Fittings For Ductile Iron Pipe -** Unless otherwise specified or shown on the approved plans, all fittings to be used with DIP will employ either mechanical joints or restrained joints conforming to the standard for "Ductile-Iron Compact Fittings for Water and Other Liquids" (ANSI/AWWA C153/A21.53 and AWWA C110). Approved fitting manufacturers include Tyler and US Pipe. (All fittings to be USA made)

1. All ductile iron fittings will be coated with an 8 mil nominal thickness fusion bonded epoxy conforming to the requirements of ANSI/AWWA C550 and C116/A21.16

2. All fittings will be wrapped in accordance with these Improvement Standards.

5. **Gaskets -** Gaskets will conform to the following specifications:

a. **Flange Gaskets -** Flange gaskets will be neoprene rubber, red rubber, US Pipe Flange Tyte, or approved equal.

b. **Push On Gaskets -** Per manufacturer's specifications and City approval.

c. **MJ Gaskets -** Per manufacturer's specifications and City approval.

d. **Insulting Flange Gaskets -** Insulating flange gaskets will be USSO Standard B.16.21 insulation flange kits, Type E Full Face Gasket with two-side insulation as manufactured by Calpico, or approved equal.

6. **Location Stakes -** A list of approved off-site location stakes include: Carsonite CRM3 072 in purple with anchor barb kit or approved equal with caution stickers attached and organization identification decal stating: CITY OF LINCOLN – CALL BEFORE DIGGING (916) 434-2450. Caution stickers will state: CAUTION RECYCLED WATER PIPELINE.

7. **Mainline Valve Lockout -** A list of approved manufacturers and part reference numbers include: SW Services PC800, DC600, or approved equal.

8. **Manhole Frame and Cover -** A listing of approved manufacturer and part reference number includes: South Bay Foundry (SBF-1920 RV-W), or approved equal.

9. **Meters -** All meters are to be purchased by the Builder/Developer from City and installed by the City DPW at (916) 434-2450. Meters to be auto read with touch pad. Meters to be Census Technology SR II.

10. **Meter Idlers -** A listing of approved meter idler manufacturers includes: Ford or approved equal. Part reference numbers are shown below:

Ford	Part #
1-inch	IDLER-4P
1.5-inch	IDLER-6-NL

11. **Meter Setters -** A listing of approved meter setter manufacturers includes: Mueller or approved equal. Part reference numbers are shown below:

Mueller	Part #
3/4-inch to 1-inch	B-24118-2
1.5-inch to 2-inch	B-2423-99000

12. **Meter Spud Couplers -** A listing of approved meter spud couplers manufacturers includes: Ford, Jones, Mueller, or approved equal. Part reference numbers are shown below:

Ford	Part #	Mueller	Part #
1.5-inch to 2-inch	CF31-XX-NL	1-inch	H-1421N

13. **Nuts and Bolts**

    a. **Flange Bolts and Nuts -** Flange bolts and nuts-flange bolts and nuts shall conform to a minimum ASTM#A307 or as approved by City Engineer. Bolts less than ¾-inches in diameter shall be a minimum Grade B (heavy hex) or as approved by City Engineer. Bolts ¾-inches and larger in diameter shall be a minimum Grade A (standard hex) or as approved by City Engineer.

b. **Meter Bolts -** Meter bolts are to be stainless steel, Grade 316 with brass nuts.

c. **Tee Bolts -** Steel bolts are to be 3/4-inch high strength, low alloy steel with a heavy nut, conforming to AWWA Standard C111-90.

14. **Nylon Bushings -** Nylon bushings will be 76-76R, 2 1/2-inch NST x 2-inch Pipe.

15. **Patching Material -** A listing of approved manufacturers and part reference numbers for patching of DIP includes: Cop-Coat Carboline Company (Bitumastic No. 50, Coal Tar), or approved equal.

16. **Polyethylene Encasement -** Polyethylene film for encasement will have a minimum thickness of 8-mils. The minus tolerance on thickness will not exceed ten percent of the nominal thickness. The encasement of pipe with polyethylene will be in either type 1 or sheet form.

    Polyethylene film will be manufactured from a Type 1, Class C raw polyethylene material conforming to "Polyethylene Encasement for Ductile-Iron Piping for Water and Other Liquids" (ANSI/AWWA C105/A21.5). Approved manufacturers include: Fee Spec's-LP378D Northtown, Fulton Enterprise Inc., Global Polymer Tech, Unisource, or approved equal.

17. **Pressure Regulators-** A listing of approved all brass pressure regulator systems include: Watts (1-inch through 2-inch, UB5-series), Wilkens (1-inch through 2-inch 600 series and 2.5-inch through 3-inch 500YSBR), or approved equal.

18. **Restraints**
    a. **PVC -** Approved restraint systems for PVC Pressure Pipe includes: Certain Teed Certa Lok (for straight runs only), EBAA Iron 2000PV, Romac Grip Rings, or approved equal.

    b. **DIP - Approved restraint systems for DIP includes:** Field Lok Gaskets by US Pipe (3-inches through 24-inches diameter only), Mega Lug 1100 Series, TR Flex or approved equal.

19. **Riser stock -** Riser stock will be 6-inch diameter Schedule 40 PVC inside meter boxes. Riser stock will be 8-inch diameter PVC C900 for all main line valves.

20. **Sampling Stations -** Sampling stations will be purchased through City Public Services at (916) 434-2450.

21. **Sap Seal -** A listing of approved products includes: Sap Seal Products Heavy Hex with Grease, or approved equal.

22. **Service Boxes and Lids -** All box lids are to be permanently marked with the appropriate label (i.e., Recycled Water, CPT, etc.). A list of approved box manufacturers includes: Christy or approved equal. Part reference numbers are shown below: (Traffic lids will be approved by the Director of Public Works/City Engineer)

Size	Christy Park Number
1-in	Box-B30, FL30, Cover-FL-30-T
1-inch (double service)	Box-B2436, Cover-FL2436
1 1/2-in to 2-in	Box-B40, Cover-B40-61J, Cover-B40T
3-in to 4-in	Box-B48, Cover-B48-62J, Cover-B48T2
6-in to 10-in	Box-B48, R-17924 PIT, Cover-R-17-52H
Note: All covers will have a 1.75-inch probe hole offset at the upper 1/3 portion of the lid. Double services boxes have two probe holes in diagonal quadrant of the lid.	

23. **Silicone -** Silicone will be clear, 100% silicone with a 25-year life, or approved equal.

24. **Telemetering Conduit -** Telemetering conduit will be minimum ½-inch diameter Schedule 40 PVC or polyethylene ("Inter-Duct") pipe. Both will have a nylon pull string.

25. **Traffic Boxes -** A list of approved traffic box manufacturers include: Brooks, Christy, or approved equal. Parts reference numbers are shown below:

Brooks	Part #
17 x 30 Box-Full Traffic Concrete	#6-T
24 x 36 Full Traffic Concrete	100FHH30-PG4
30 x 48 Full Traffic Concrete	200FHH36-PG4

Christy
V-64 Box
V-64 Box x 6-inch Extension
V-64 Cover Traffic Load
G05 Box with Lid
B40 Box

26. **Tracing Wire -**Tracing wire will be 10-gauge minimum UF rated solid copper with plastic insulation.

27. **Tracing Wire Connectors -** Tracing wire connectors will be split-bolt type connectors. Listings of approved products include: Permanent Seal- Wire Connectors- Part #97811 or approved equal.

28. **Tracing Wire Mastic Tape Seal -** Tracing wire mastic tape will be 3M Mastic Tape #2229 or approved equal.

29. **Valves**

    a. **Butterfly Valves -** Butterfly valves to be used on diameters ranging from 16-inch to 72-inch. A list of approved valves include: Pratt Ground Hog (Holiday free epoxy coated), Mueller Lineseal III (Holiday free epoxy coated), or approved equal. Certification will be provided by the valve manufacturer stating the epoxy lining is holiday free. (Made in USA)

b. **Gate Valves -** Gate valves for 2-inch - 2 1/2-inch services will be NIBCO-113 Bronze, or approved equal. Gate valves to be used on diameters ranging from 3-inch to 12-inch and will be resilient seat or wedge and meet C509 Class C Specifications. A list of approved valves includes: M & H 4067 RW Gate Valve, Mueller A-2361 RS Gate Valve, US Pipe Metro Seal 250, or approved equal. (Made in USA)

c. Two part epoxy repair kit will be provided by valve manufacturer.

30. **Valve Boxes -** All valve boxes in street and other traffic areas will be designed to H-22 loading conditions. A list of approved manufacturers and part reference numbers include: Christy Type G5, Christy Type B17 by 30, BES Type G5, or approved equal.

31. **Water Pipe Marking Tape -** 12" wide non-detectable warning tape. Approved manufacturers and materials include: Northtown Company, Christy, or approved equal.

32. **Zinc Caps -** A listing of approved manufacturers include: Mars, or approved equal. Part reference numbers are shown below:

Mars: 7/16-inch to 1/2-inch – 2.5 ounce weight
5/8-inch to 1-inch – 6 ounce weight

[THIS PAGE INTENTIONALLY LEFT BLANK]

RECYCLED WATER DETAILS

Typical Recycled Water Trench Detail RW-1
Recycled Water Service Trench Detail RW-2
Recycled Water Gate & Buttery Valve & Box..... RW-3
Recycled Water 1" & 2" Air Release Valve RW-4
Recycled Water 2" Blow Off Valve RW-5
Recycled Water 4" Blow Off Valve..... RW-6
Recycled Water-Residential 1" x 1" Service Line..... RW-7
Recycled Water-Commercial 1 ½ & 2" Irrigation Service RW-8
Recycled Water-Commercial 3" and Larger Service..... RW-9

[THIS PAGE INTENTIONALLY LEFT BLANK]

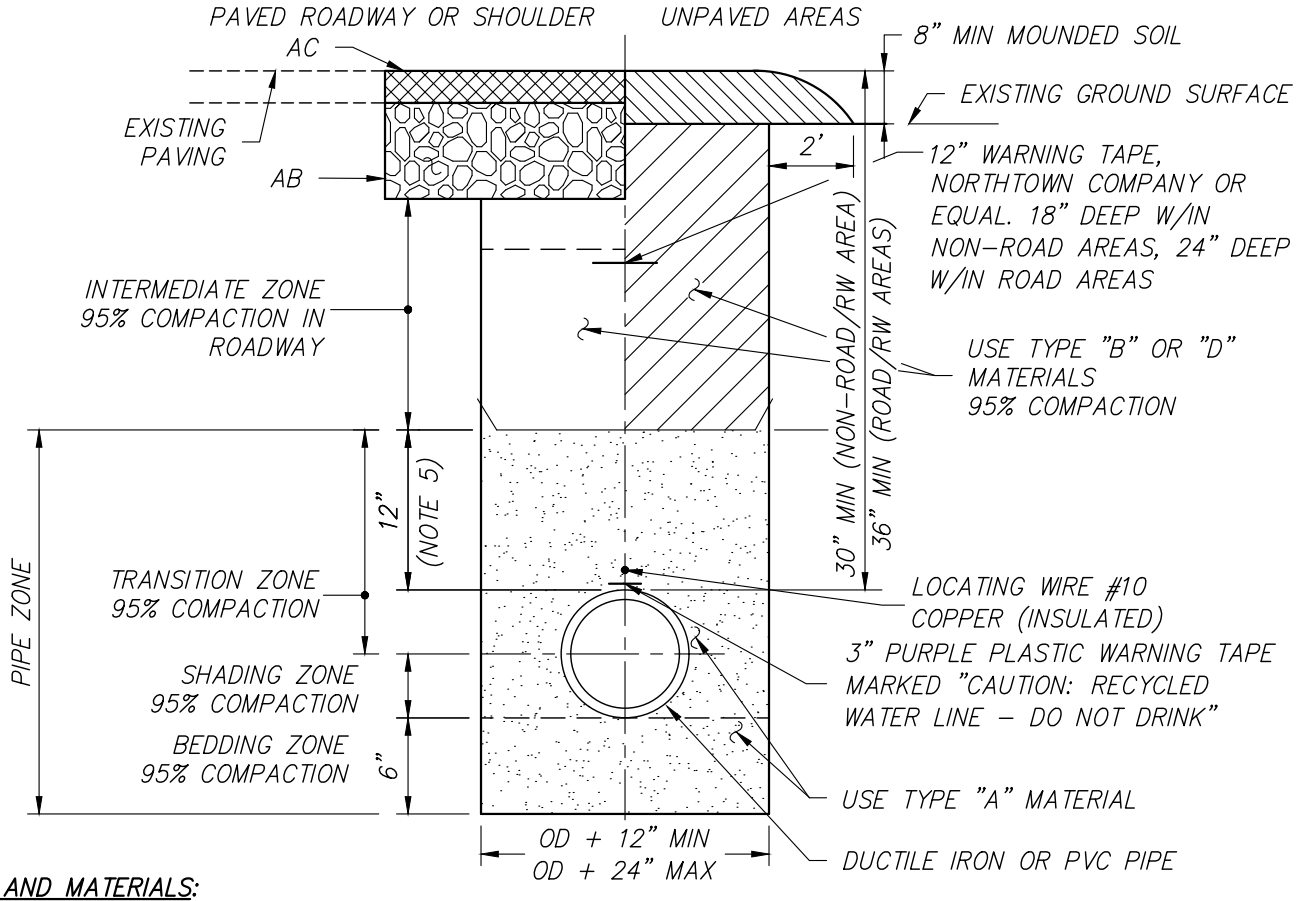

BEDDING AND MATERIALS:

TYPE "A" MATERIAL: 3/8" MINUS IMPORTED SCREENED SAND WITH MINIMUM SAND EQUIVALENT OF 50 PER CTM 217. ALL GRADATIONS TO BE APPROVED BY CITY PRIOR TO CONSTRUCTION.

TYPE "B" MATERIAL: CLASS 2 AGGREGATE BASE PER CALTRANS STANDARD SPECIFICATIONS.

TYPE "D" MATERIAL: CRUSHED ROCK OR SOIL-ROCK MIXTURE (NATIVE) NOT TO EXCEED 3". UP TO A 6" MINUS MATERIAL MAY BE USED WITH SPECIAL CONSIDERATIONS AND CONDITIONS APPROVED BY CITY AND GEOTECHNICAL ENGINEER. THE MATERIAL WILL BE COMPLETELY FREE OF WOOD, ROOTS OR OTHER DELETERIOUS MATERIAL. MATERIAL NOT BE USED WITHIN 24" OF TOP OF PIPE WITHOUT CITY ENGINEERS APPROVAL. COMPACTION WILL BE BY VIBRATORY EQUIPMENT OR OTHER APPROVED DEVICES. THE CITY MAY REQUIRE THAT THE MATERIAL BE SCREENED. A LAYER OF GEOTEXTILE FABRIC WILL BE PLACED BETWEEN THE PIPES AND INTERMEDIATE BACKFILL ZONE. MATERIAL WILL ONLY BE USED WITH GEOTECHNICAL ENGINEER'S RECOMMENDATION AND WITH APPROVAL OF THE CITY ENGINEER.

NOTES:

1. CREEK CROSSING OR SHALLOW TRENCH SHALL REQUIRE SPECIAL PIPE PER APPROVAL OF CITY ENGINEER.
2. BEDDING FOR OTHER APPROVED PIPE TO BE APPROVED BY CITY ENGINEER AND PER ASTM C12.
3. CITY WILL REQUIRE CUT-OFF WALLS AND TRENCHES TO CONTROL PERMEABILITY AND/OR REQUIRE GEOTEXTILE BARRIER WRAP FOR MATERIAL NOT MEETING A TYPE "A" OR "B" MATERIAL SPEC.
4. SHOVEL SLICING TO BE USED ALONG WITH MECHANICAL (VIBRATORY) AT 12" MAX LOOSE LIFTS.
5. TYPE "D" MATERIAL REQUIRES 24" INCHES BACKFILL ABOVE PIPE.
6. TYPE "D" MATERIAL MAY ONLY BE USED WITH CITY ENGINEER APPROVAL AND GEOTECHNICAL ENGINEER RECOMMENDATION.
7. PIPE TO BE PURPLE PVC FOR DIAMETERS 12" AND LESS. (MIN. PRESSURE CL 200). PIPE TO BE DUCTILE IRON FOR DIAMETERS GREATER THAN 12". MIN. PRESSURE CLASS 250 FOR 16" OR LARGER AND 350 FOR 12" OR SMALLER. ALL DUCTILE IRON PIPE TO BE CLASS 50. SEE SECTION 10 OF THE CITY IMPROVEMENT STANDARDS.

CITY OF LINCOLN
ENGINEERING DEPARTMENT

TYPICAL RECYCLED WATER TRENCH DETAIL

REVISIONS:	DATES:	APPROVED:
		CITY ENGINEER DATE

SCALE: NONE
DATE: SEPTEMBER 2019
DRAWN BY: C.G.

RW-1

NOTES:

1. DEPTH OF BEDDING TO VARY UPON EXISTING SOIL CONDITIONS PER APPROVAL OF CITY.
2. 12" MIN. IF TYPE "D" MATERIAL IS USED WITHIN INTERMEDIATE ZONE. TYPE "D" MATERIAL TO BE APPROVED BY SOILS ENGINEER AND CITY ENGINEER.

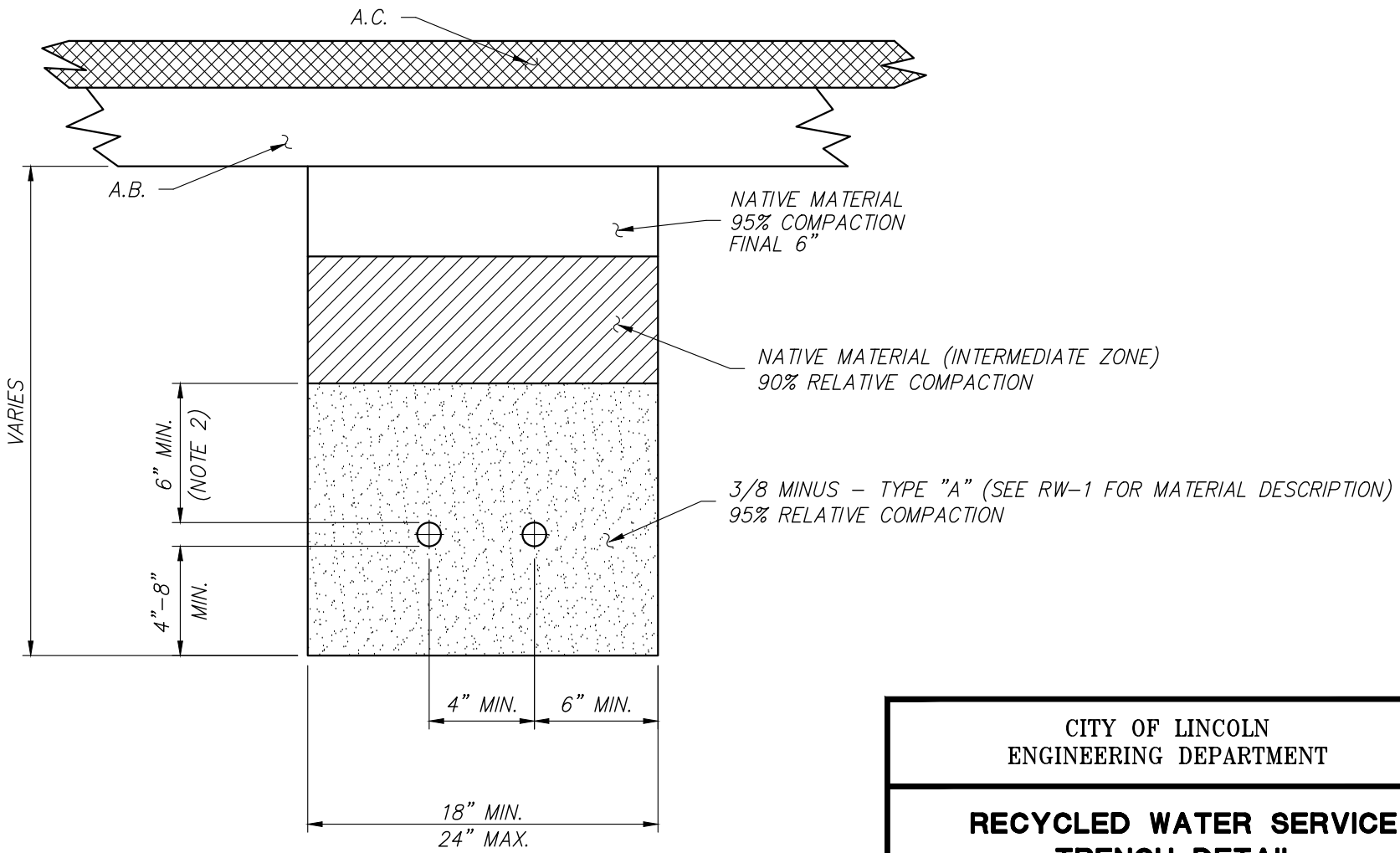

CITY OF LINCOLN
ENGINEERING DEPARTMENT

RECYCLED WATER SERVICE TRENCH DETAIL

REVISIONS:	DATES:	APPROVED:
		CITY ENGINEER DATE

SCALE: NONE
DATE: SEPTEMBER 2019
DRAWN BY: C.G.

RW-2

BOX

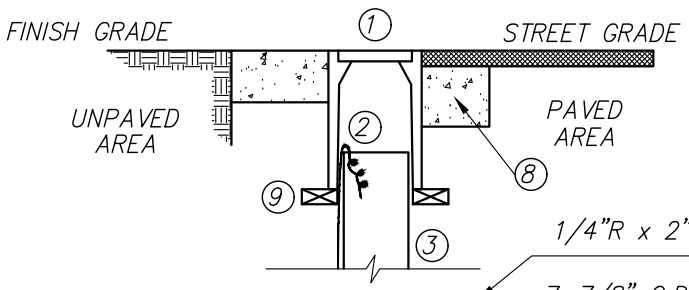

BUTTERFLY VALVE OR GATE VALVE

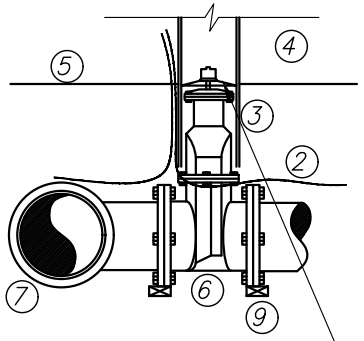

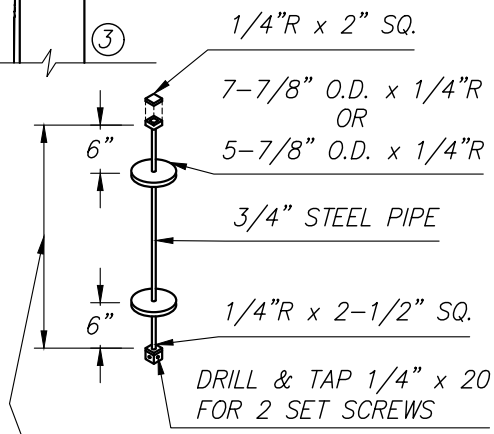

VARIABLE OF FABRICATION EXT. TO BE 12"-24" FROM FINISHED GRADE.

VALVE OPERATING NUT EXTENSION

REQUIRED WHERE VALVE NUT IS IN EXCESS OF 40" DEEP BELOW FINISH GRADE.

NOTES:

1. TRACING WIRE THROUGH VALVE BOXES SHALL BE PLACED OUTSIDE OF RISER BUT INSIDE OF BOX.
2. TRACING WIRE SHALL BE SPLICED INSIDE THE VALVE BOX PER DETAIL BELOW AND SHALL LOOP WITHIN THE VALVE BOX WITH 18" OF SLACK WIRE.
3. ALL GATE AND BUTTERFLY VALVES SHALL BE CENTERED IN A ONE PIECE RISER STOCK WITH THE USE OF A RISER ALINER.
4. OPERATOR NUTS DEEPER THAN 36 INCHES FROM FINISH GRADE SHALL REQUIRE A VALVE NUT EXTENSION 2 FEET MINIMUM IN LENGTH.
5. VALVE BOXES LOCATED IN A PAVED AREA SHALL BE PLACED IN A 6"x6" CONCRETE COLLAR. PLACEMENT SHALL BE CONTIGUOUS WITH THE UNDERSIDE OF THE PROPOSED PAVEMENT.
6. VALVE BOXES LOCATED IN AN UNPAVED AREA SHALL BE PLACED IN A 12" DEEP BY 6" WIDE CONCRETE COLLAR. THE COLLAR SHALL BEGIN AT FINISH GRADE.
7. INSTALL CONCRETE BLOCKING UNDER ENTIRE PERIMETER OF BOX.
8. VALVES AND FITTINGS SHALL BE WRAPPED IN 8 MIL POLYETHYLENE.
9. PIPE AND VALVES TO BE MARKED PER SECTION 10 OF THE CITY IMPROVEMENT STANDARDS.

MATERIALS:

1. CONCRETE VALVE BOX
2. #10 INSULATED TRACING WIRE OUTSIDE RISER
3. 8" RISER STOCK
4. RISER ALIGNER
5. PLASTIC BACKFILL TAPE
6. GATE VALVE FOR 12"≤ AND BUTTERFLY VALVES FOR 16" ≥
7. DUCTILE IRON TEE W/ RESTRAINTS
8. CONCRETE COLLAR (SEE NOTES 5 & 6)
9. CONCRETE BLOCKING (SEE NOTES)

WIRE SPLICE NOTES:

1. TWIST THE WIRE A MINIMUM OF (5) TIMES ON EACH END.
2. INSTALL SPLIT BOLT CONNECTOR.
3. COVER THE ENTIRE SPLICE WITH MASTIC TAPE WRAP
4. WRAP MASTIC WITH VINYL TAPE.

* SOLDERING MAY BE INCLUDED IN ADDITION TO THE ABOVE.

TRACING WIRE SPLICE OR EQUAL

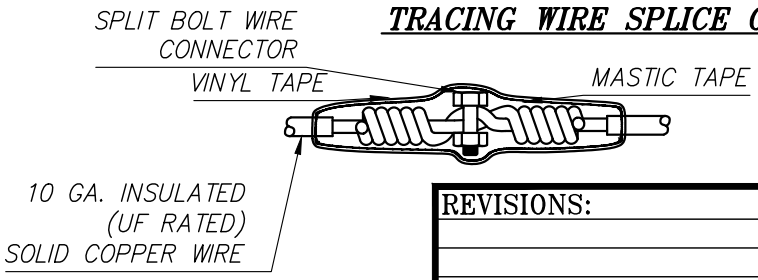

CITY OF LINCOLN
ENGINEERING DEPARTMENT

RECYCLED WATER GATE AND BUTTERFLY VALVE AND BOX

REVISIONS:	DATES:	APPROVED:
		CITY ENGINEER DATE

SCALE: NONE
DATE: SEPTEMBER 2019
DRAWN BY: C.G.

RW-3

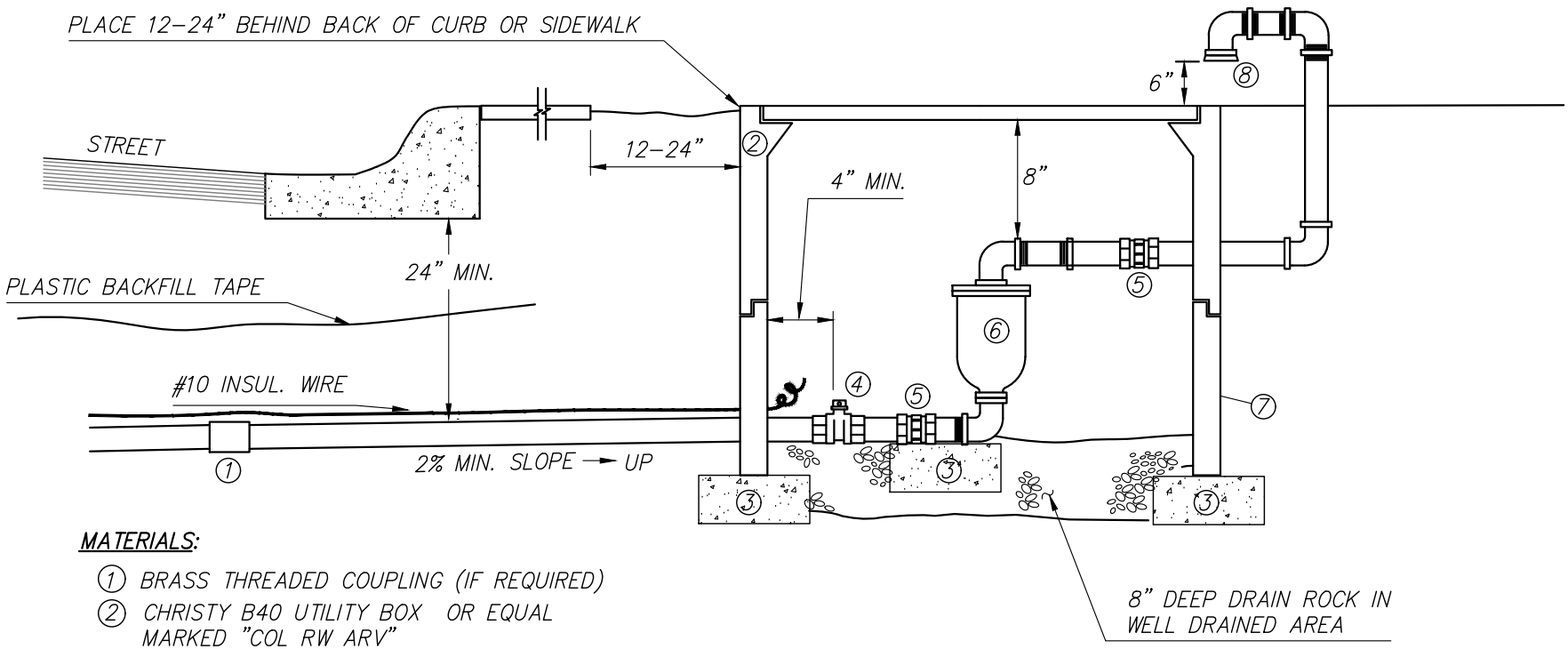

MATERIALS:

1. BRASS THREADED COUPLING (IF REQUIRED)
2. CHRISTY B40 UTILITY BOX OR EQUAL MARKED "COL RW ARV"
3. CONCRETE BLOCK SUPPORTS
4. CURB STOP – MUELLER B–20200 OR EQUAL (F.I.P. x F.I.P.)
5. BRASS UNION
6. COMBINATION AIR / VACUUM VALVE
7. CHRISTY EXTENSION SPOOL (IF NECESSARY) – CHRISTY B40 BOX
8. BRASS CAP WITH 9 DRILLED 1/16" HOLES OR APPROVED EQUAL ADD 20 MESH STAINLESS STEEL SCREEN TO VENT.

NOTES:

1. BURIED PIPE AND FITTINGS SHALL BE WRAPPED WITH 8 MIL POYETHYLENE OR APPROVED EQUAL.
2. PIPE AND VALVES SHALL BE MARKED IN ACCORDANCE WITH SECTION 10 OF THE CITY IMPROVEMENT STANDARDS.

CITY OF LINCOLN
ENGINEERING DEPARTMENT

RECYCLED WATER
1" AND 2" AIR RELEASE VALVE

REVISIONS:	DATES:	APPROVED:
		CITY ENGINEER DATE

SCALE: NONE
DATE: SEPTEMBER 2019
DRAWN BY: C.G.

RW-4

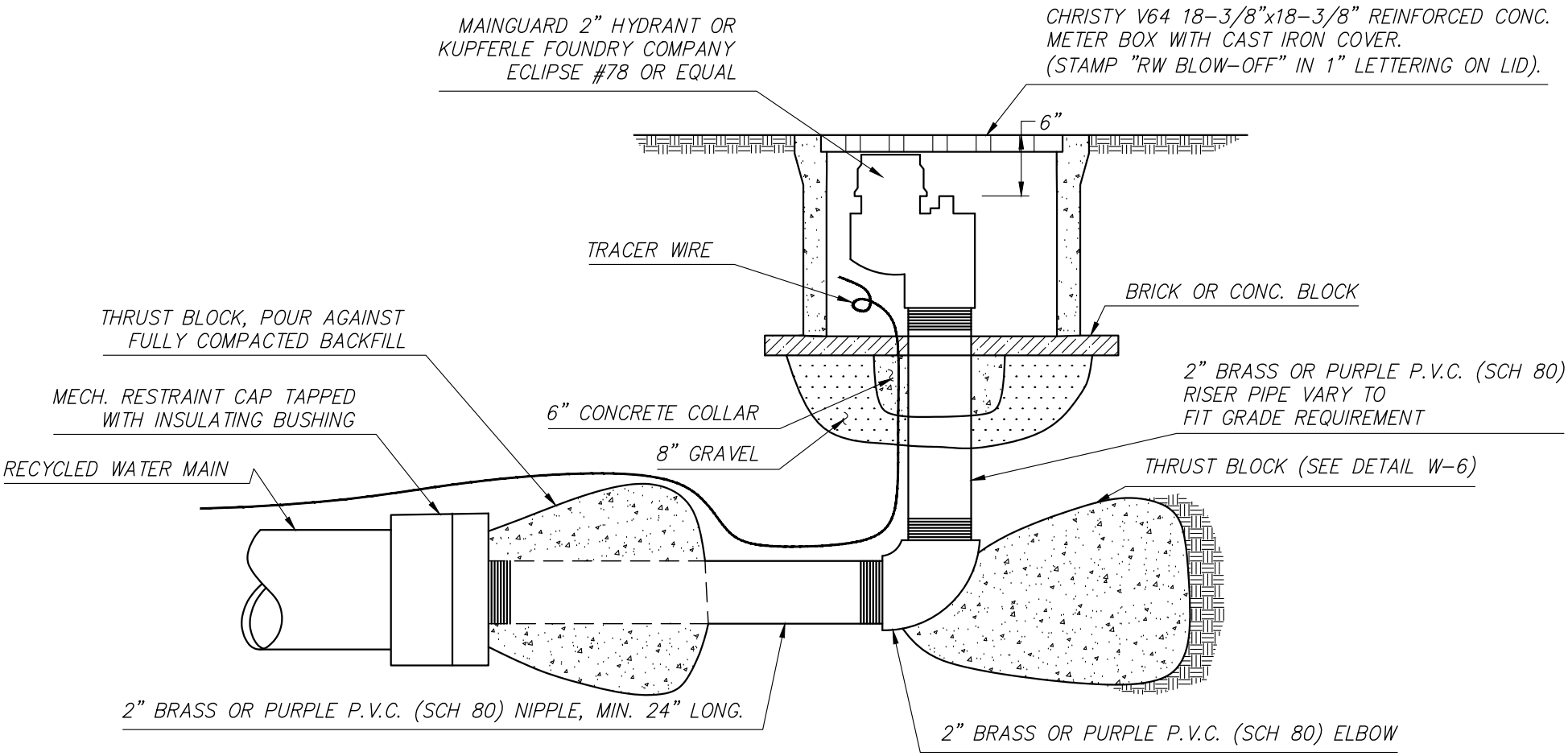

NOTES:

1. IN-LINE BLOW-OFFS TO BE TAPPED W/ JONES # J-996 OR EQUAL W/ TRANSITION FROM COPPER TO BRASS, WITH CORROSION PROTECTION.
2. PIPE AND VALVES SHALL BE MARKED IN ACCORDANCE WITH SECTION 10 OF THE CITY IMPROVEMENT STANDARDS.

CITY OF LINCOLN
ENGINEERING DEPARTMENT

RECYCLED WATER
2" BLOW OFF VALVE

REVISIONS:	DATES:	APPROVED:
		CITY ENGINEER DATE

SCALE: NONE
DATE: SEPTEMBER 2019
DRAWN BY: C.G.

RW-5

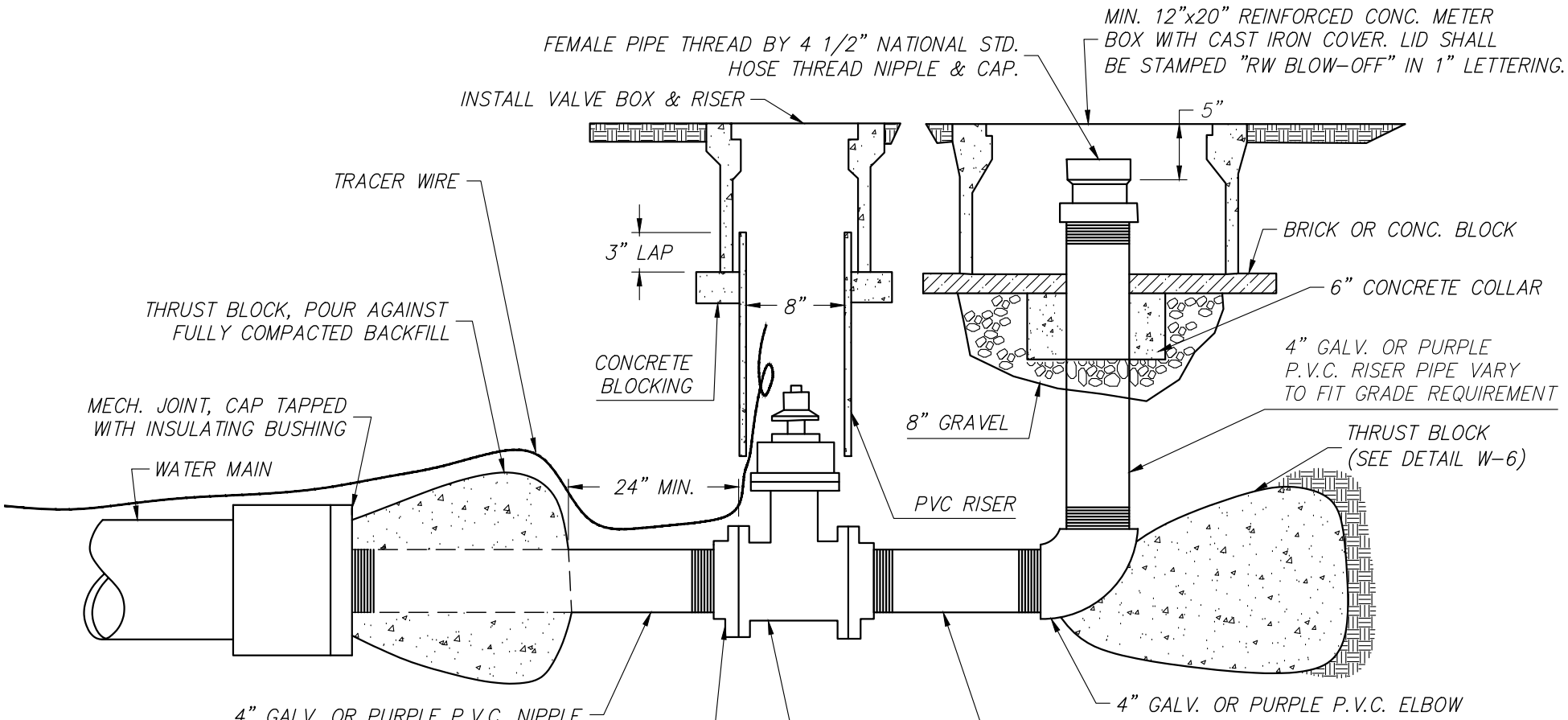

NOTE: FOR USE IN SPECIAL SITUATIONS W/ APPROVAL OF CITY ENGINEER FOR PIPES GREATER THAN 16".

SAG POINT CONNECTION

CITY OF LINCOLN
ENGINEERING DEPARTMENT

RECYCLED WATER
4" BLOW OFF VALVE

REVISIONS:	DATES:	APPROVED:
		CITY ENGINEER DATE

SCALE: NONE
DATE: SEPTEMBER 2019
DRAWN BY: C.G.

RW-6

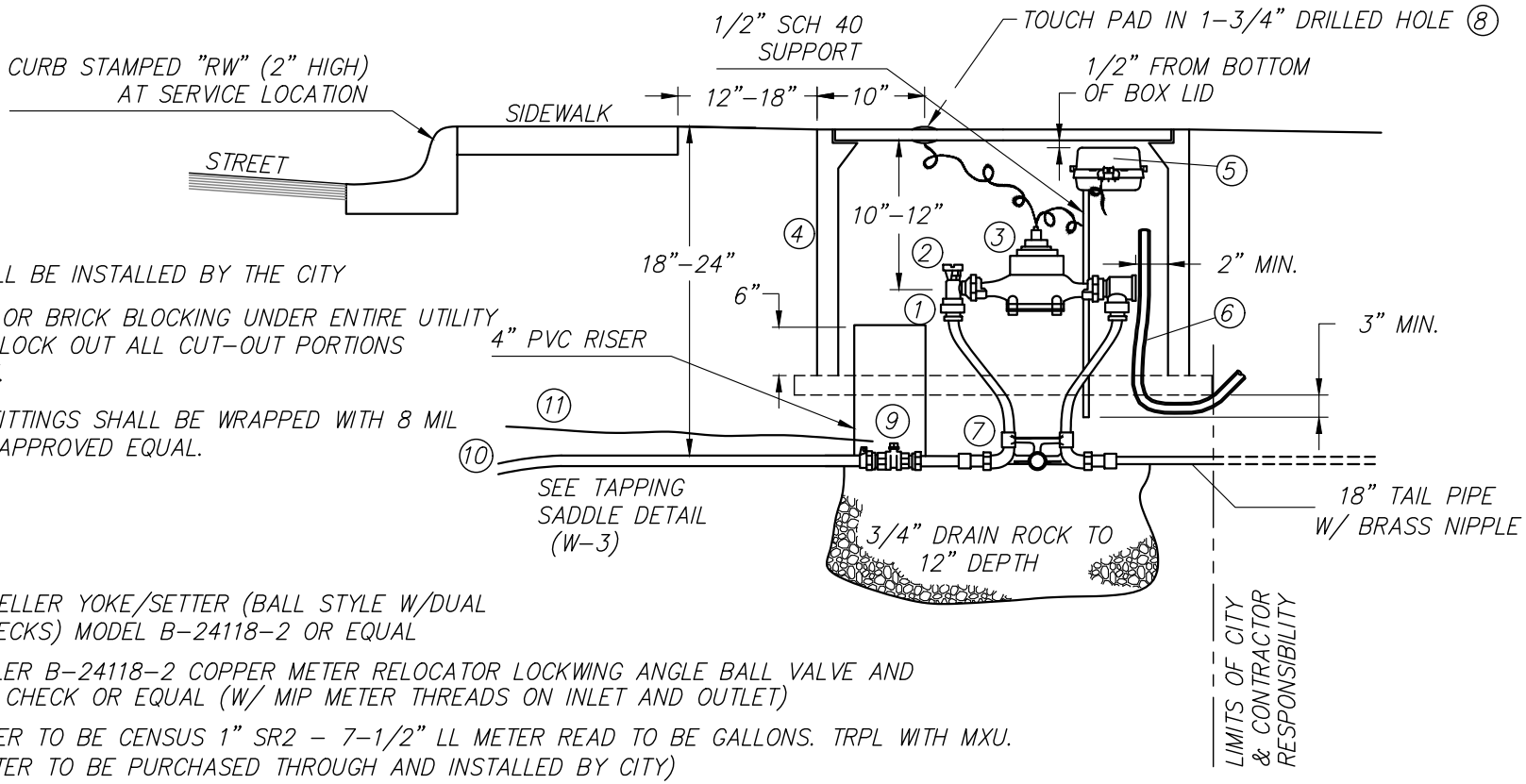

NOTES:

1. WATER METER SHALL BE INSTALLED BY THE CITY
2. INSTALL CONCRETE OR BRICK BLOCKING UNDER ENTIRE UTILITY BOX PERIMETER. BLOCK OUT ALL CUT–OUT PORTIONS OF THE METER BOX.
3. BURIED PIPE AND FITTINGS SHALL BE WRAPPED WITH 8 MIL POLYETHYLENE OR APPROVED EQUAL.

MATERIALS LIST:

(1) **METER SETTER** MUELLER YOKE/SETTER (BALL STYLE W/DUAL CHECKS) MODEL B–24118–2 OR EQUAL

(2) **ANGLE STOP** MUELLER B–24118–2 COPPER METER RELOCATOR LOCKWING ANGLE BALL VALVE AND DUAL CHECK OR EQUAL (W/ MIP METER THREADS ON INLET AND OUTLET)

(3) **WATER METER** METER TO BE CENSUS 1" SR2 – 7–1/2" LL METER READ TO BE GALLONS. TRPL WITH MXU. (METER TO BE PURCHASED THROUGH AND INSTALLED BY CITY)

(4) **METER BOX** CHRISTY MODEL B30 OR EQUAL (W/BOLT DOWN LIDS, READING LIDS, NO KNOCK OUTS) W/1–1" ROUND OPENING FOR (TOUCH PAD) IN COVER (CONTRACTOR RESPONSIBILITY)

(5) **REMOTE TRANSMITTER WITH SUPPORT** MXU AND TRPL TO BE PURCHASED THROUGH AND INSTALLED BY CITY

(6) **CONNECTION CONDUIT** 1/2" SCH 80 CONDUIT TO BE INSTALLED BY CONTRACTOR. TO CONNECT MULTIPLE METERS (SEE DETAIL W–5)

(7) **METER COUPLING** MUELLER H–10890 OR EQUAL (1" x 4" M.I.P. x SWIVEL NUT)

(8) **TOUCH PAD** PURCHASED BY DEVELOPER AND TO BE INSTALLED BY CITY

(9) **CURB STOP** MUELLER B–25166 BALL METER VALVE W/ LOCKWING OR EQUAL (INLET: COPPER FLARE AND OUTLET: F.I.P.) W/IN 4" PVC RISER

(10) **COPPER PIPE** TYPE K COPPER, ALL SERVICE TO 1" (FLARED FITTING)

(11) **RECYCLED WATER IDENTIFICATION TAPE:** TAPE SHALL BE IN ACCORDANCE WITH SECTION 10 OF THE CITY IMPROVEMENT STANDARDS.

NOTE:

PIPE AND METER SHALL BE WRAPPED AND MARKED IN ACCORDANCE WITH SECTION 10 OF THE CITY IMPROVEMENT STANDARDS.

CITY OF LINCOLN
ENGINEERING DEPARTMENT

RECYCLED WATER 1" OR 1-1/2" SERVICE LINE

REVISIONS:	DATES:	APPROVED:
		CITY ENGINEER DATE

SCALE: NONE
DATE: SEPTEMBER 2019
DRAWN BY: C.G.

RW-7

NOTES:

1. NO WATER IS TO BE DRAWN THROUGH THE BACKFLOW DEVICE UNTIL IT HAS BEEN TESTED BY THE CITY'S PUBLIC SERVICES.
2. CONTRACTOR SHALL LAY 3/4" DRAIN ROCK 12" DEEP UNDER METER SETTER.
3. CONTRACTOR SHALL INSTALL 1/2" CONDUITS 18" TO 24" DEEP.
4. WATER METERS SHALL BE PURCHASED THROUGH CITY. PURCAHSE INCLUDES INSTALLATION.
5. THE BACKFLOW DEVICE SHALL BE INSULATED WITH A CITY APPROVED FREEZE PROTECTION BAG.
6. INSTALL CONCRETE BLOCKING UNDER ENTIRE PERIMETER OF UTILITY BOX.
7. THERE SHALL BE NO FLOW ALTERING DEVICES 5x THE PIPE DIA. UPSTREAM AND DOWNSTREAM OF THE METER.
8. CURBSTOP SHALL BE BETWEEN 12" & 18" OF EASEMENT.
9. FITTINGS AND PIPING SHALL BE BRASS.
   BURIED PIPE & FITTINGS SHALL BE WRAPPED WITH 8 MIL. POLYETHYLENE APPROVED EQUAL.

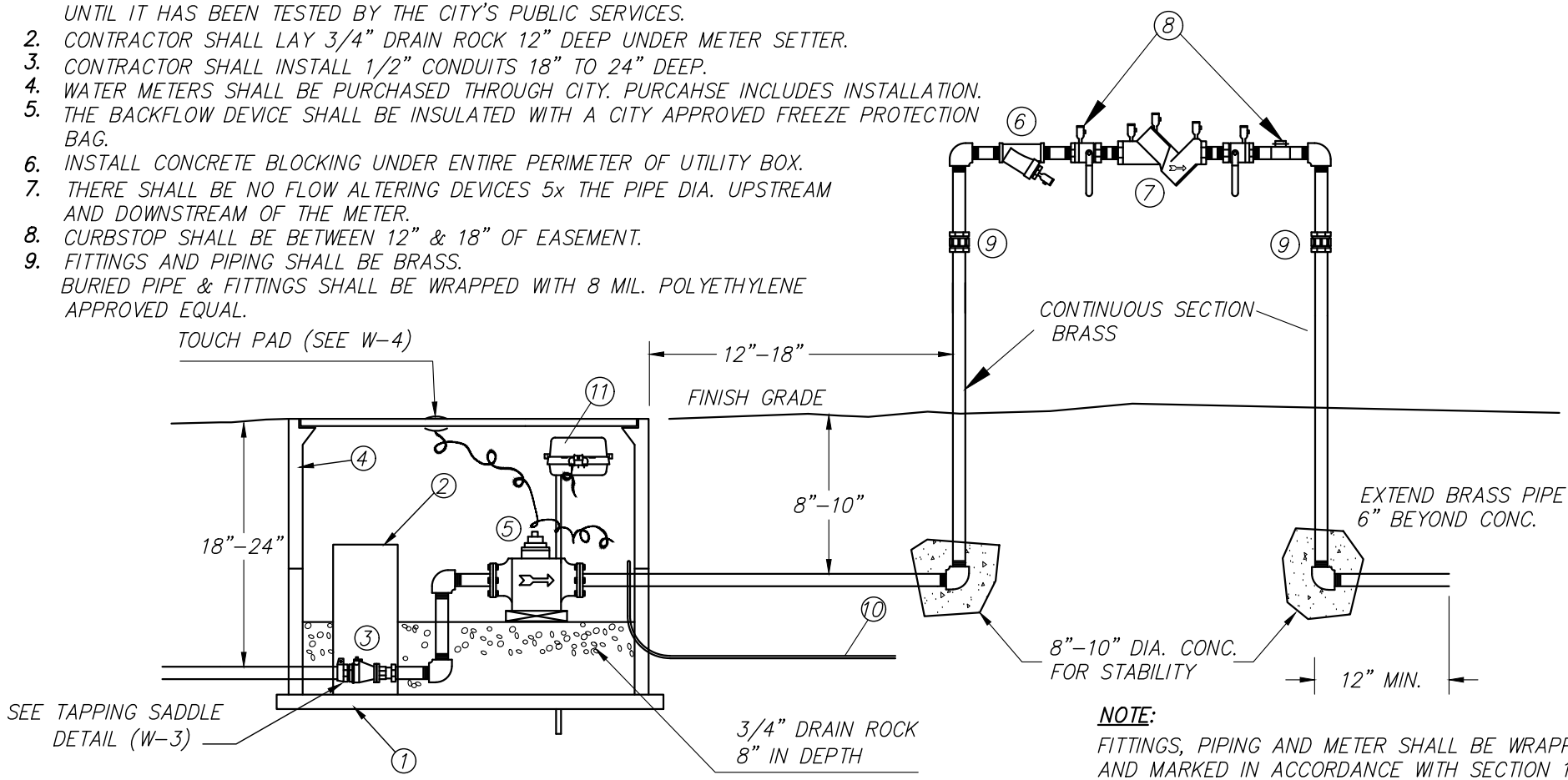

NOTE:

FITTINGS, PIPING AND METER SHALL BE WRAPPED AND MARKED IN ACCORDANCE WITH SECTION 10 OF THE CITY IMPROVEMENT STANDARDS.

MATERIALS:

1. CONCRETE BLOCKING
2. 6" CONTINUOUS RISER STOCK
3. CURB STOP
4. B40 UTILITY BOX WITH BOLT DOWN LID.
5. TURBO METER WITH STRAINER (PURCHASED THROUGH CITY)
6. "Y" STRAINER
7. R.P. TYPE BACKFLOW DEVICE
8. BALL VALVES
9. INSTALL (2) UNIONS
10. 1/2" CONDUIT TO OTHER MANIFOLD BOXES (OPTIONAL)
11. REMOTE TRANSMITTER (SEE DETAIL W-4)

CITY OF LINCOLN
ENGINEERING DEPARTMENT

RECYCLED WATER COMMERCIAL 1 1/2" & 2" IRRIGATION SERVICE

REVISIONS:	DATES:	APPROVED:
		CITY ENGINEER DATE

SCALE: NONE
DATE: SEPTEMBER 2019
DRAWN BY: C.G.

RW-8

NOTES:

1. NO WATER IS TO BE DRAWN THROUGH THE BACKFLOW DEVICE UNTIL IT HAS BEEN TESTED BY THE CITY'S PUBLIC SERVICES.
2. PIPE SHALL BE DUCTILE IRON. (FLANGED)
3. GATE VALVE SHALL BE RESILIENT SEAT.
4. SPOOLS UPSTEAM & DOWNSTREAM OF METER SHALL BE 5x THE PIPE DIAMETER.
5. INSTALL CONCRETE BLOCKING UNDER ENTIRE PERIMETER OF UTILITY BOX.
6. INSTALL 3/8" NON CASE HARDENED CHAIN W/LOCK BETWEEN VALVES.
7. CONTRACTOR SHALL SUPPLY CITY WITH 2 ROMAC GRIP RING CONFIGURATIONS FOR METER BYPASS AT TIME OF FINAL INSPECTION.
8. PIPE AND FITTINGS SHALL BE PURCHASED BY THE DEVELOPER.
9. THE BACKFLOW DEVICE SHALL BE INSULATED WITH A CITY APPROVED FREEZE PROTECTION BAG.

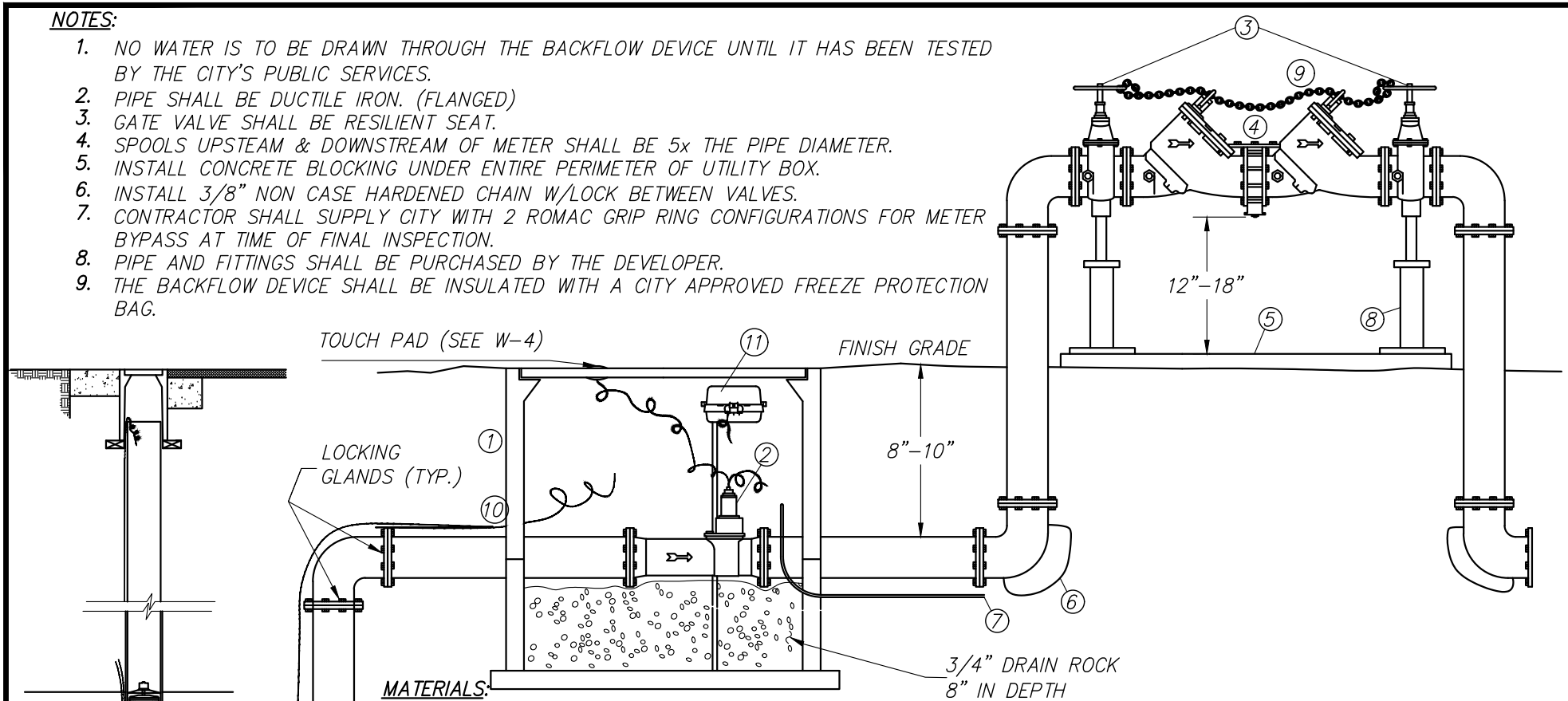

MATERIALS:

1. B40 UTILITY BOX W/STEEL LID OR APPROVED EQUAL - BOLT DOWN LID
2. TURBO METER WITH STRAINER (PURCHASED THROUGH CITY)
3. RESILIENT SEAT GATE VALVES
4. R.P. TYPE BACKFLOW DEVICE
5. 4" THICK REINFORCED CONCRETE SLAB
6. THRUST BLOCK (TYP.)
7. 1/2" CONDUIT TO OTHER MANIFOLD BOXES (OPTIONAL)
8. SUPPORT STANDS BOLTED INTO CONCRETE (TWO BOLTS MINIMUM)
9. 1/4" NON-CASE HARDENED CHAIN WITH LOCK
10. TRACING WIRE
11. REMOTE TRANSMITTER (SEE W-4)

NOTE:

FITTINGS, PIPING AND METER SHALL BE WRAPPED AND MARKED IN ACCORDANCE WITH SECTION 10 OF THE CITY IMPROVEMENT STANDARDS.

CITY OF LINCOLN
ENGINEERING DEPARTMENT

RECYCLED WATER COMMERCIAL 3" AND LARGER SERVICE

REVISIONS:	DATES:	APPROVED:
		CITY ENGINEER DATE

SCALE: NONE
DATE: SEPTEMBER 2019
DRAWN BY: C.G.

RW-9