SECTION 10

RECYCLED WATER SYSTEM (RW)

10-1 General RW-1
10-2 Connection to Existing Improvements RW-2
10-3 Construction Staking RW-3
10-4 Trench Work RW-3
A. Existing Pavement RW-3
B. Water in Trench RW-4
C. Unsuitable Trench Bottom RW-4
D. Open Trench RW-5
E. Steel Trench Plates RW-5
F. Temporary RW-5
G. Pipe Support RW-5
H. Trench Width RW-5
I. Excess Material RW-5
10-5 Pipe Bedding RW-5
10-6 Concrete Cradles, Arches & Encasements RW-6
10-7 Pipe Installation RW-6
A. Manufacturer's Recommendations RW-6
B. Pipe Cleanliness RW-6
C. Cathodic Protection RW-7
D. Placing Pipe RW-7
E. Joining Pipe RW-7
F. Covering Pipe RW-7
G. Pipe Restraints and Fittings RW-7
H. Tracing Wire RW-7
I. Pipe Protection Marking RW-8
J. Polyethylene Protection RW-8
K. Polyvinyl Chloride (PVC) Pressure Pipe Installation RW-8
L. Ductile Iron Pipe (DIP) RW-9
M. Transitions RW-9
N. Borings RW-9
10-8 Service Installations RW-10
A. Service Runs RW-11
B. Saddles RW-11
C. Warning Tape RW-11
D. Service Manifolds RW-11
E. Curb Marking RW-11
10-9 Service Abandonment RW-12
10-10 Appurtenances Installations RW-12
A. Underground Protection RW-12
B. Gate Valves RW-12
C. Waning Markings RW-12
D. Dead End Lines RW-12
E. Insulation RW-12
10-11 Pipe Backfill RW-13
A. Performance Based QA/QC (Non-Testable Materials) RW-13
B. Design Based QA/QV (Testable Materials) RW-13

C. Trench Backfill Material RW-14
D. Pipe Zone Backfill RW-14
E. Compaction Test Methods RW-15
F. Testing Frequencies RW-15
10-12 On-Site Recycled Water Facilities RW-15
A. Inspections RW-15
B. Coverage Test for On-Site Irrigation Systems RW-16
C. Controller Charts RW-16
D. Conversion from Potable System to Recycled Water Supply RW-16
E. Conversion from Recycled Water System to Potable Water Supply ..... Supply RW-17
F. On-Site Identification RW-17
G. Quick Coupling Valves RW-18
1. Recycled Water RW-18
2. Potable Water RW-18
H. Sprinklers RW-18
I. Warning Labels RW-18
J. Valve Boxes, Meter Boxes and Tags RW-19
1. Valve and Meter Boxes RW-19
2. Valve and Meter Tags RW-19
K. On-Site Recycled Water Piping RW-19
1. Minimum Requirements of Piping and Fittings RW-20
2. PVC Piping RW-20
L. On-Site Potable Water Piping RW-21
10-13 Testing Procedures RW-22
A. Pressure Test RW-22
B. Tying into the City System RW-23
C. Continuity Testing RW-23
D. Cross-Connection Testing RW-23
10-14 Repairing Installed Improvements RW-23
10-15 Punch List Process RW-24
10-16 Materials RW-24
A. Approved Equal RW-24
1. Product RW-24
2. Contact RW-24
3. Reference RW-24
B. Unapproved Materials RW-24
C. Recycled Water Main RW-24
1. PVC Pressure Pipe RW-24
2. Ductile Iron Pipe RW-25
D. Services RW-25
1. Copper Tubing RW-25
2. Brass Material RW-26
a. Brass Pipe RW-26
b. Brass Fitting RW-26
c. Brass Fittings for Copper Tubing RW-26
3. Corporation Stops RW-26
4. Curb Stops RW-27
5. Dielectric Tape RW-27
6. Service Saddles RW-27
E. Appurtenances RW-28
1. Air Release Valves RW-28
2. Blocking for Boxes RW-28
3. Blow Off RW-28

4. Fittings RW-29
5. Gaskets RW-29
6. Location Stakes RW-29
7. Mainline Valve Lockout RW-30
8. Manhole Frame and Cover RW-30
9. Meters RW-30
10. Meter Idlers RW-30
11. Meter Setters RW-30
12. Meter Spud Couplers RW-30
13. Nuts & Bolts RW-30
14. Nylon Bushings RW-31
15. Patching Material RW-31
16. Polyethylene Encasement RW-31
17. Pressure Regulators RW-31
18. Restraints RW-31
19. Riser Stock RW-32
20. Sampling Stations RW-32
21. Sap Seal RW-32
22. Service Boxes and Lids RW-32
23. Silicone RW-32
24. Telemetering Conduits RW-32
25. Traffic Boxes RW-33
26. Tracing Wires RW-33
27. Tracing Wire Connectors RW-33
28. Tracing Wire Mastic Tape Seal RW-33
29. Valves RW-33
30. Valve Boxes RW-34
31. Valve Covers RW-34
32. Water Pipe Marking Tape RW-34
33. Zinc Caps RW-34

10-17 Recycled Water System Details RW-35

SECTION 10

RECYCLED WATER SUPPLY SYSTEM (RW)

10-1 **GENERAL**- All improvements within the City of Lincoln will be approved and permitted by the City, and will conform to the City of Lincoln Design Criteria & Procedures Manual. All pipe, fittings, valves, and other appurtenances installed in the City's rights-of-way will be installed in strict accord with the approved project improvement plans, these Public Facilities Improvement Standards, certain parts of the latest editions of the Caltrans Standard Plans and Standard Specifications, and as recommended by the material manufacturer.

Should conflicts arise between documents, the approved project improvement plans will govern over these Public Facilities Improvement Standards, These Public Facilities Improvement Standards will govern over the Caltrans Standard Specifications. In the event of conflict between applicable documents and/or plans, the most restrictive will prevail.

The manufacturer's guidelines for all materials to be used on the project will be present on the construction site at all times.

Developers/Contractors will comply with all applicable City, County, State, and Federal laws and regulations relating to construction of the improvements as required.

If the City Engineer determines that any work on private or public property constitutes a hazard to the health, safety, or welfare of the public; endangers property; adversely affects the safety, us or stability of adjacent property; an overhead or underground utility, or a public way, watercourse or drainage channel; or could adversely affect the air quality; or the water quality of any water bodies or water courses; the City Engineer may issue a stop work notice to the owner of the property upon which the condition is located, or other person or agent in control of such property. Upon receipt of such stop work notice, the recipient will, within the period specified therein, stop all work, obtain any necessary permits and conform to the requirements identified in the stop work notice. The City Engineer may require the submission of plans or other reports, detailed construction recommendations, studies, or other engineering data prior to and in connection with any corrective or proposed work or activity.

All improvements within the City of Lincoln will be performed by a contractor licensed in accordance with the California Contractors State License Law, Business and Professions Code Section 7000 et seq.

All persons, firms, partnerships, or corporations doing business of any nature in the City of Lincoln will have a current Business License as stated in Chapter 5.04-License Tax, City of Lincoln Municipal Code. This includes developers, engineers, and contractors.

Refer to the City of Lincoln's Design Criteria & Procedures Manual for design information.

All projects will be in compliance with the State water quality requirements for erosion and sedimentation control at all times.

10-2 **CONNECTION TO EXISTING FACILITIES** - Connection to existing City recycled water facilities will be made only with written approval of the City Engineer.

A. City Engineer has the option of having City personnel make the required system tap. Should the City perform the tap, the cost for the work will be on a time and materials basis and reimbursable to the City.

The Contractor will be responsible for these tasks associated with the tap:

1. Coordinating the work requested with the Director of Public Works/City Engineer and Recycled Water Division. This will include discussions on provisions for materials and equipment required to complete the work and notification to affected residents.

2. Providing an approved traffic control plan and required traffic control, including signage.

3. Providing any necessary lighting.

4. Excavating the work area as directed by the City Engineer including providing any necessary sheeting/shoring, backfilling and compacting the excavation(s) in accordance with City standard detail W-1 upon completion of the tap.

5. Under no circumstances will anyone other than a representative of the City operate valves in a City operated system.

B. The Contractor will be responsible for these tasks associated with the

connection to an existing stub:

1. All connections will take place in the presence of the City Engineer.

2. Connections will be made only after the newly constructed recycled water system has successfully passed all required testing procedures as established in Section 10-13 of these Public Facilities Improvement Standards.

3. **Under no circumstances will anyone other than a representative of the City operate valves in a City operated system.**

4. Dewatering of both the new and existing recycled water mains will prevent foreign matter from entering the system.

5. All material used in the tie-in will be new material and clean of debris.

10-3 **CONSTRUCTION STAKING** - The water main will be staked prior to installation. Staking will provide the station and the offset to the main, as well as the cut to the nearest tenth of a foot, 0.1-foot. Stakes will be provided at a minimum of every 50-feet in tangent sections and every 25-feet in curved sections and every 10-feet in approved vertical curve sections. The City Engineer must be supplied with two sets of cut-sheets prior to construction without exception.

10-4 **TRENCH WORK** - Earthwork required to construct recycled water facilities will be performed to the lines and grades shown on the approved project improvement plans. At all times the trench and the work area surrounding the trench will be kept in a safe manner to adequately protect the public and the workers. The person designated as the project "competent person" will be onsite during all work activity. The specified trench width will be maintained to a height of one-foot over the top of the pipe for all trench wall geometry cross-sections including: vertical walls, steeped vertical walls, V-walls, and combined vertical-V-walls.

Prior to placing bedding, backfill materials, or pipes on the trench bottom subgrade surface, the trench bottom will be: relatively free of loose materials, have a relatively smooth appearance, have a relatively constant grade, and be firm and unyielding.

Refer to Detail RW-1 and Section 10-11 of these Public Facilities Improvement Standards for additional information on trench materials.

A. **Existing Pavement -** When the trench is in an existing surfaced area, the pavement will be sawed or scored and broken ahead of the trenching operations. The pavement will be cut accurately on neat and parallel lines.

Before the final asphalt concrete patch is placed, the edges of the asphalt concrete will be re-sawcut at least one-foot wider than the width of the trench ("T trench") to create smooth parallel edges. All cuts in Portland cement concrete pavements will be sawcut with approved equipment. Trench restorations will conform to Standard Detail H-25.

B. **Water in Trench -** When water is encountered in the trench, the geotechnical engineer will be contacted to provide input to the Engineer. The trench will be kept dry in a manner approved by the City Engineer until the placement of the approved bedding material, laying and jointing of the pipe, and placement of the shading material has been completed and approved. The City will consider, on a case-by-case basis, the use of conventional, in trench, sump dewatering methods provided that the trench is backfilled with washed, crushed rock or equivalent to at least a height of 3-feet higher than the local ground water table or perched water whichever is at a higher elevation. The crushed rock may require wrapping with a geotextile filter fabric depending upon the expected ground water flow velocities. Installation of ground water monitoring wells can be used to determine the elevation of the water table and/or perched ground water.

   The City requires a dewatering system be designed and implemented in all areas where trenches will be excavated and native backfill will be placed below the local ground water table and/or perched ground water. Installation of ground water monitoring wells can be used to determine the elevation of the water table and/or perched ground water. The dewatering system may include, but not be limited to: driven well point screens and vacuum extraction systems, drilled and installed screened wells with submersible pumps or vacuum extraction systems, or other dewatering methods. Use of in trench sumps will not be allowed as the sole dewatering method. The owner's/developer's geotechnical consultant should develop a dewatering work plan for review and approval by the City prior to implementation.

   The manner employed to dispose of water pumped from an excavation will be subject to the approval of the City Engineer and will conform to all water pollution constraints of the City and other agencies. Ground water pumped from the trench will be disposed of in a manner to not cause injury to public or private property, or to constitute a nuisance or menace to the public.

C. **Unsuitable Trench Bottom -** If the bottom of the trench is soft, yielding, or otherwise unsuitable as a foundation for the pipe in the opinion of the geotechnical engineer, or City Engineer, the unsuitable material will be removed to the depth necessary to provide a stable and satisfactory foundation. Three-quarter inch crushed rock will be placed in the trench to provide a stable foundation. The rock is in addition to the required pipe

bedding used in the pipe zone. All rock will be wrapped with geotextile fabric (see Section 3-6, Type “C” material).

D. Open Trench - The trench will be in a safe condition at all times. In roadway areas and locations accessible to the public, trenches will be excavated only as far in advance of pipe laying, as can be backfilled in the same day. In addition, the maximum total length of open trench will be no more than 300-feet ahead of the pipe laying operation, or 200-feet behind the pipe laying operation. A trench in an existing roadway that is not to be regraded is defined as "open” until backfilled to subgrade or the original ground line.

E. Steel Trench Plates - Steel trench plates will not be used over open trench areas without the approval of the City Engineer. All steel plates will be adequately restrained to eliminate shifting. All excavations covered by steel plates will be shored. Temporary asphalt plant mix ("cut-back") at least one-foot in width will be used for a transition on each edge of the plate. "Rough Road" or "Bump" signs will be installed 200-feet on each side before the steel plate. The sign will only be mounted to an operable, lighted barricade for a maximum of 24-hours. The sign will be mounted to a 4-inch x 4-inch post if the placement exceeds 24-hours.

F. Temporary Surfacing - A temporary asphalt plant mix "cut-back" surface not less than 2-inches in thickness will be placed immediately after the top backfill has been completed and compacted. This temporary surface will be maintained at a level surface until removal. The temporary surfacing material will be removed just prior to placing the permanent surface material.

G. Pipe Support - Bedding will provide uniform and continuous support along the barrel of the pipe. The minimum depth of bedding material will be provided under the bell. Blocking of the pipe is not permitted.

H. Trench Width - The trench bottom width to 6 inches above top of pipe will comply with Standard Detail RW-1 or as approved by the City Engineer.

I. Excess Material - Excess material and materials determined unsuitable for backfill by the City Engineer will be removed from the project site.

10-5 **PIPE BEDDING** - Pipe bedding will conform to Standard Detail RW-1 and the following:

A. Bedding will provide uniform and continuous support along the barrel of the pipe. The minimum depth of bedding material will be provided under the bell. Blocking of the pipe is not permitted.

B. Loose material will be removed from the trench bottom and replaced with imported material.

C. Bell holes will be excavated per manufacturer's recommendations. The minimum depth of bedding material will be provided under the bell. Care will be taken to ensure that the bell hole is no larger than necessary to accomplish proper joint assembly.

D. The City Engineer can require cut-off walls (Standard Detail SS-8) if a potential or existing groundwater problem exists and if the bedding and pipe backfill material require it.

10-6 **CONCRETE CRADLES. ARCHES & ENCASEMENTS** - Concrete cradles, arches and encasements will conform to Standard Detail SS-9, and the following:

A. The pipe will be placed in proper position on temporary supports consisting of concrete block or bricks. When necessary, the pipe will be rigidly anchored or weighted to prevent flotation when the concrete is placed.

B. Concrete for cradles, arches or encasements will be placed uniformly along the pipe. Concrete placed beneath the pipe will be sufficiently workable to fill the voids without excessive vibration. The concrete will be allowed to cure and remain undisturbed for a minimum of 24-hours prior to backfill and compaction of the trench.

C. Water will not be permitted to enter, seep or run onto the concrete while curing.

10-7 **PIPE INSTALLATION-** Recycled Water pipe will be installed in accordance with the following provisions:

A. Manufacturer's Recommendations – All installations will follow manufacturer's recommendations unless otherwise noted on the approved plans. The manufacturer's installation guide will be on the job site at all times.

B. Pipe Cleanliness - The Contractor will keep the pipe interior free from foreign materials and in a clean and sanitary condition until acceptance by the City. At times when pipe laying is not in progress, the open pipe end will be sealed with a tight cap or plug to prevent foreign matter from entering the pipe. Plywood, polyethylene film or cardboard is unacceptable. Provisions will apply to the lunch-hour as well as overnight.

C. **Cathodic Protection -** Cathodic protection will be installed as shown on the project plans. Cathodic test station locations will be marked with “CTS” in 2-inch letters in the curb.

D. **Placing Pipe -** Care will be taken when lowering pipe into the trench to protect the pipe from damage. Chains are not permitted. The pipe will be laid carefully to the lines and grades shown without grade breaks, unless designed with such, or to minimum depths shown on the approved plans. If field conditions exist such that the pipe may not be laid to the specified grade, the approved plans will require revisions prior to proceeding with construction.

E. **Joining Pipe -** Pipe sections will be correctly jointed to form a smooth flow line. Care will be taken in placing the pipe and making field joints.

F. **Covering Pipe -** Improvements installed without proper inspection will be exposed and inspected as required by the City Engineer.

G. **Pipe Restraints and Fittings -** Pipes will be mechanically restrained to the length specified in the approved plans, using materials specified herein. Thrust blocks and restraint will be used on all fittings 11.25 degrees and greater. (See Standard Details W-6 and W-6A). Fitting sections will be mechanical and/or flanged fittings with MEGALUG® (EBBA) or approved equal. PVC pipe and straight pipe sections may use grip rings/gaskets. All fittings and appurtenances will maintain a minimum of 18-feet of restrained pipe into the fitting from all directions or as required by the manufacturer’s manual and the approved project improvement plans.

H. **Tracing Wire -** A continuous No. 10 insulated tracing wire will be attached to mains, service lines and appurtenances per the Standard Details and the following:

1. Tracing wire will be continuous between main line valve boxes and fire hydrants.

2. Tracing wires through valve boxes will be placed outside of riser, but inside the box.

3. Tracing wire in manholes and vaults will be attached inside the facility within one foot of the rim.

4. Wire splices will be located above ground and inside of valve boxes and made per Standard Detail RW-3.

I. **Pipe Protection Marking -** A 12-inch wide, purple plastic non-detectable recycled water backfill tape marked "Recycled Water Main Below", will be placed in mainline trenches, 18-inches deep in non-road areas and 24-inches deep in road areas.

Separate from the backfill tape, all recycled water mains other than purple PVC will be installed with recycled water warning tape. The plastic warning tape will be prepared with black printing on a purple field, having the words "CAUTION: RECYCLED WATER LINE- DO NOT DRINK". The overall width of the tape will be 3-inches. The warning tape will be installed directly on top of the pipe, longitudinally and centered. The warning tape will be installed continuous for the entire length of the pipe and will be fastened to each pipe length by plastic tape banded around the pipe with fasteners no more than 5-feet apart. Taping attached to the sections of the pipe before laying in the trench will have flaps sufficient for continuous coverage. All risers between the main line and control valves will be installed with warning tape.

Mains in unpaved areas will be marked every 150-lineal foot with a purple composite utility marker having a decal stating: "Caution Recycled Water Pipeline". Appurtenances (valves, ARVs, test stations, etc.) and angle points will also be marked. Mains in landscaped areas will be delineated with a brass marker set in an 8-inch concrete cylinder. The brass marker will state "City of Lincoln Recycled Water Main".

J. **Polyethylene Protection -** All underground metal (ductile iron, valves, fittings, copper, brass, etc.) will be wrapped in 8-mil minimum thickness polyethylene encasement.

K. **Polyvinyl Chloride (PVC) Pressure Pipe Installation -** PVC will be installed in accordance with the AWWA Manual M23, AWWA C907, and the manufacturer's recommendations, except as otherwise provided herein:

1. PVC Pipe will have been manufactured within an 18-month period prior to installation. All pipe to be made in U.S.A.

2. Pipe and gaskets will be kept clean and protected against sunlight and heat damage.

3. Pipe showing signs of physical damage or excessive ultraviolet exposure will be rejected and will be immediately removed from the job site.

4. The pipe will be installed with the manufacturing label showing on the top.

5. The reference mark or stab line on the spigot end must be flush with the bell end and visible for inspection.

6. The beveled end of the pipe will be cut off before placement into a mechanical joint.

L. Ductile Iron Pipe (DIP) - DIP will be installed in accordance with the standards for "Installation of Ductile Iron Water Mains and Their Appurtenances" (ANSI/AWWA C600) and the manufacturer's recommendations, and as provided herein:

1. All DIP will be polyethylene encased in accordance with these Public Facilities Improvement Standards and the standard for "Polyethylene Encasement for Ductile-Iron Piping for Water and Other Liquids" (ANSI/AWWA C105/A21.5). Polyethylene encased pipe will be bedded and backfilled with Type A material 12-inches above the crown of pipe.

2. At the direction of the Director of Public Works/City Engineer, the Contractor will repair damages to the polyethylene encasement as described within ANSI/AWWA C-105/A21.5 or will replace all damaged polyethylene film sections.

3. DIP cuts will be coated with an acceptable bituminous material.

M. Transitions -Transitions between DIP and PVC will be made as follows:

1. A PVC pipe spigot may be inserted into a DIP bell by cutting off the PVC bevel on the spigot and leaving no more than a ½-inch taper

2. Transitions may be made by the use of a DIP repair sleeve.

N. Borings - Borings for installation of recycled water lines will be made as follows:

1. The equipment, method and sequence of operation and conductor pipe grades will be approved by the City Engineer. A minimum of 48-hours' notice will be given prior to the start of work, without exception.

2. Excavation for the boring operation will be the minimum necessary to satisfactorily complete the work. Bracing and shoring will be adequate to protect workers and any adjacent structure or roadbed.

3. The conductor will closely follow the boring operation. The bored hole will not be more than 0.10-foot larger in diameter than the outside diameter of

the conductor. Guide rails will be accurately set to line and grade to ensure installation of the conductor within allowable limits. The conductor diameter will be sufficient to allow adjustment of line and grade of the conducted pipe to meet allowable tolerances and to allow sand to be placed between the conductor and the conducted pipe.

The inside diameter of the conductor will be a minimum of 10-inches larger than the outside diameter of the conducted bell pipe or joint, as approved by the City Engineer. A minimum of 4-inches of clearance will be required between the conducted pipe and the casing, taking the skids into consideration.

4. Conducted pipe will be supported by a minimum of three sets of synthetic skids per stick of pipe, or as required by the City Engineer. Pipe sections will be joined outside of the conductor. The skids and casing entrance will be lubricated prior to sliding the conducted pipe into place. The height of the skids may be adjusted to meet specified grades.

5. The space between the conducted pipe and conductor will be completely filled with clean, dry silica sand, blown into place. The method of placing sand in the void will be approved by the City Engineer. Both ends of the casing will be plugged with non--shrink grout a minimum of 12-inches into the casing.

6. Whenever, in the opinion of the Developer's design or geotechnical engineer, the nature of the soil indicates the likelihood of ground loss which would result in a greater space between the outer surfaces of the conductor than allowed, the Contractor will take immediate steps to prevent such occurrences by installing a jacking head extending at least 18 inches from the leading edge of the conductor.

The jacking head will cover the upper two-thirds of the conductor and project not more than ½-inch beyond the conductor outer surface. Excavation will not be made in advance of the jacking head. Voids greater than allowable will be filled with sand, soil cement, grout, or as approved by the City Engineer. Where voids are suspected, the design or geotechnical engineer may direct the contractor to drill the conductor, to pressure inject grout to refusal and repair the drilled hole. Grouting pressure will not exceed 50-psi at the nozzle.

10-8 **<u>SERVICE INSTALLATION</u>** - Recycled Water services will be installed in accordance with manufacturer's recommendations, the Standard Details and with the following provisions:

A. **Service Runs -** Services will be continuous from the main line to the service box. Bends in copper tubing will be made in a manner that does not crimp or flatten the tubing.

B. **Saddles -** Taps, service saddles, tees, joints, and fittings attached to mains will be separated by a minimum of 24-inches. Service saddles will be wrapped in 8-mil minimum thickness polyethylene and backfilled with Type "A" backfill, or other approved material by the City Engineer. Service saddles will be installed with zinc caps on all bolts, per these Public Facilities Improvement Standards.

C. **Warning Tape -** Recycled water services will be installed with recycled water warning tape per Section 10-7 of these Standards.

D. **Service Manifolds -** Service manifolds will be constructed per the following criteria:

1. Where a service line is extended a distance greater than 40 feet, a construction jumper will be installed per Detail W-19 of the City of Lincoln Public Facilities Standards. The new service line and manifold will be tested in accordance with Section 10-13 of these Public Facilities Improvement Standards and AWWA C651.

   Where a service line is extended a distance less than 40-feet, the extension will be cleaned, swabbed with chlorine and flushed in the presence of the City Engineer. The new service line and manifold will be pressure tested in accordance with Section 10-13 of these Public Facilities Improvement Standards and AWWA C651.

   In both cases, the installation will be fully restrained by an approved restraint system, starting at the main and as required by the approved project improvement plans.

2. Services outside of paved sections will be ductile iron.

3. No recycled water will be drawn through a service prior to installation of the water meter.

E. **Telemetering -**Telemetering conduit will be installed in accordance with these Public Facilities Improvement Standards, the Uniform Electric Code and as required by the City Engineer.

F. **Curb Marking -** The curb in front of recycled water services will be stamped with a "RW" (2" in size).

10-9 **SERVICES ABANDONMENT** - All recycled water services requiring abandonment will be disconnected from the main line at the corporation stop unless otherwise approved by the City Engineer.

10-10 **APPURTENANCES INSTALLATION** - All appurtenances, including but not limited to blow-offs, sample stations, air release valves and meters will be installed in accordance with manufacturer's recommendations, these Public Facilities Improvement Standards and these provisions:

A. Underground Protection- All valves, fittings, DIP, copper and underground brass will be wrapped in an 8-mil minimum thickness polyethylene encasement. Damaged or scratched surfaces on epoxy coated valves and appurtenances will be repaired with an epoxy repair kit per manufacturer's recommendations and to the satisfaction of the inspector prior to wrapping, without exception.

"Sap Seal" caps will be placed on all buried nuts and bolts. Longer bolts (5 inches minimum) may be required to accommodate the caps. In situations where a longer bolt cannot be installed due to the configuration of the appurtenance, and with the City Engineer's approval, the bolt will be coated with an "anti-seize" product prior to installation. After the nut, has been tightened into place, the nut and bolt will be completely coated with an acceptable bituminous coating. Additionally, where sap seal caps cannot be used, all buried nuts and bolts will be coated with a bituminous coating. This includes exposed bolts found on a manufactured appurtenance (i.e., valve bonnets, etc.)

B. Gate Valves - Gate valves will be centered in a one-piece riser stock. On valves where the operating nut exceeds 36-inches in depth from final grade, an operator nut extension 24 inches minimum in length will be installed. (See Standard Detail RW-3)

C. Warning Markings - All appurtenances will be marked with warning tags, signs, and/or purple paint as indicated on the approved plans.

D. Dead End Lines - Dead end lines, permanent and temporary, will have a blow off constructed per Standard Detail RW-5 and RW-6.

E. Insulation - Insulating kits will be installed at transitions between dissimilar metal pipes per these Public Facilities Improvement Standards and as required by the City.

10-11 **PIPE BACKFILL QA/QC** - Pipe zone backfill will conform to Standard Details RW-1, RW-2, these Improvement Standards. Construction quality assurance and quality control (QA/QC) of all utility trench backfill will be performed by the owner's/developer's geotechnical engineering consultant. A performance-based QA/QC specification will be developed and used for placement and compaction of all non-testable trench backfill materials. A design based QA/QC specification will be used for placement and compaction of all testable trench backfill material.

A. Performance Based QA/QC (Non-Testable Materials) - Non-testable trench backfill materials generally consist of locally derived mixtures of cobbles with a sandy matrix and/or breccia (volcanic rock) with a sandy matrix. These non-testable backfill materials should have a maximum particle size of 6-inches (greatest dimension). Use of non-testable trench backfill materials will be approved by the City on a case-by-case basis.

A performance-based specification criteria will be used to evaluate the suitability of placed and compacted non-testable trench backfill materials. The property owner's/developer's geotechnical engineering consultant must prepare a work plan that describes a proposed site-specific performance-based specification for review and approval by the City prior to commencement of work. The work plan must include, but not be limited to:

1. Maximum loose lift (layer thickness) prior to compaction.

2. Moisture content range to be achieved prior to compaction.

3. Minimum number of passes and coverage of specified compaction equipment.

4. Specified compaction equipment to be used.

B. Design Based QA/QC (Testable Materials) - Testable trench backfill materials generally consist of on-site native earth materials and imported earth materials that can be classified as soils according to the American Society for Testing and Materials (ASTM) Unified Soils Classification System guideline procedures (ASTM D2487 and D2488). These soil materials can be easily tested to determine if they meet the project design based QA/QC specifications for percent relative compaction by the following ASTM test methods:

ASTM D1556, Standard test method for in place density and unit weight of soil and soil-rock mixtures by the Sand-Cone Method.

ASTM D2922, Standard test method for in place density and unit weight of oil and soil-rock mixtures by the Shallow Depth Nuclear Method.

ASTM D3017, Standard test method for in place water content of soil and soil-rock mixtures by the Shallow Depth Nuclear Method.

C. **Trench Backfill Material -** The City requires designed based construction QA/QC testing and observation services to be performed by the owner's/developer's geotechnical engineering consultant to document that trench backfills meet or exceed the minimum material properties and minimum relative percent compaction requirements of the City specifications. The trench backfill material types, and relative percent compaction for recycled water main are presented below.

1. **Type "A" Material:** 3/8 inch minus imported screened sand with a minimum sand equivalent of 50 per CTM 217. All gradations are to be approved by the City prior to construction.

2. **Type "B" Material:** Class 2 Aggregate Base Rock per Caltrans Standard Specifications.

3. **Type "D" Material:** Crushed rock or soil-rock mixture (native) not to exceed 3 inches. Up to a 6 inch minus material may be used with special considerations and conditions approved by the City and Geotechnical Engineer. The material will be completely free of wood, roots, or other deleterious materials. Material not to be used within 24-inches of top of pipe without City Engineer's approval. Compaction will be by vibratory equipment or other approved devices. The City may require that the material be screened. A layer of geotextile fabric will be placed between the pipes and intermediate backfill zone. Material will only be used with geotechnical engineer's recommendation and with approval of the City Engineer.

D. **Pipe Zone Backfill -** Extreme care will be taken when consolidating the backfill around the pipe zone. For pipe 12-inches in diameter and smaller, no more than one-half of the pipe will be covered prior to shovel slicing (forcing rock backfill into the lower quadrants of the pipe) For pipe greater than 12-inches in diameter, no more than 6-inches will be covered prior to shovel slicing. Sufficient care will be taken to prevent movement of the pipe during shovel slicing. Shovel slicing will be witnessed by the City Engineer prior to shading the pipe. Proposed bedding, hunching and initial backfill (pipe backfill) materials will be approved by soils engineer and submitted to the Engineer with sieve analysis and sand equivalent test results. California Test

Methods will include 216, 217, 301, and 302. Compaction equipment will not make direct contact with the pipe.

E. Compaction Test Methods- The percent relative compaction of all testable trench backfill soil will be determined by a combination of the following ASTM test methods:

ASTM D1557, Modified Proctor Compaction Curve.
ASTM D1556, In-place Soil Density By The Sand Cone Replacement Method.
ASTM D2216, Soil Moisture Content by the Convection Oven Method.
ASTM D2922, In-place Soil Density by Nuclear Method.
ASTM D3017, In-place Soil Moisture Content by Nuclear Method.
ASTM D4643, Soil Moisture Content by the Microwave Oven Method.
ASTM D4959, Soil Moisture Content by the Direct Heating Method.

F. Testing Frequencies - All field testable trench backfill materials, that are classified according to the Unified Soils Classification System using ASTM D2487 and D2488 procedures as CL, ML, SC, SM, GC, GM, GP and GW by ASTM tests D422 (Particle Size Gradation) and D4318 (Atterberg Plasticity Indices), should be tested for percent relative compaction using a minimum frequency of one compaction test per maximum 12-inch-thick loose lift (layer) per 250-linear-feet of trench length or material change, whichever condition requires the greatest number of tests. Generally, minimum requirements include 12-inch loose lifts; moisture conditioned to at or above optimum moisture and compacted with 8 to 10 passes by a sheepsfoot wheel mounted on a Cat 225 or equivalent. In special circumstances, the City may require other compaction equipment combined with thinner lifts.

All field testable trench backfill materials, that are classified according to the Unified Soils Classification System using ASTM D2487 and D2488 procedures as Cl, CH, Land MH by ASTM tests D422 (Particle Size Gradation) and D4318 (Atterberg Plasticity Indices), should be tested for percent relative compaction using a minimum frequency of one compaction test per maximum 12-inch-thick loose lift (layer) per 100-linear-feet of trench length or material change, which ever condition requires the greatest number of tests.

10-12 <u>ON-SITE RECYCLED WATER FACILITIES</u> - Private, on-site recycled water systems will conform to additional specifications below:

A. Inspections - If the on-site system is installed prior to plan approval and/or inspection, any and all portions of the systems will be exposed, inspected and corrected as directed by the City Engineer. Failure to comply will result in

termination of service. Plan changes or field modifications will be reviewed and approved by the City Engineer prior to installation.

B. **Coverage Test for On-Site Irrigation Systems -** The Owner/Developer will be responsible for controlling overspray and runoff on new systems or systems requiring conversion. To ensure that overspray or runoff is in accordance with the Department of Health Services regulations, inspection by the City Engineer is required. City Engineer is to be contacted for a coverage inspection test upon completion of the landscaping improvements involving use of recycled water.

   The Owner/Developer or representative will attend the coverage test and will have someone attend capable of making minor adjustments to the sprinkling system. All modifications and costs are the responsibility of the Owner/Developer.

   The Owner/Developer will be notified in writing of modifications to the system which could not be made during the coverage test. Such modifications will be made in a timely manner. Failure to make timely modifications will result in termination of service.

C. **Controller Charts -** Controller charts will be prepared by the Owner/Developer, approved by the City Engineer and then placed in the controllers prior to start of service. Failure to provide controller charts, or removal of charts from the controller will result in termination of service. Controller charts will be prepared as set forth herein:

   1. Provide one controller chart for each automatic controller, showing the area covered by the controller. The chart will be the maximum size the controller door will physically allow.

   2. The chart will be a reduced size drawing of the actual as-built system. The line weights and lettering on the original controller chart drawing will be drawn so that the reduced chart is clearly legible.

   3. The chart will be a black line print, with a different color used to show the area of coverage provided by the controller.

   4. When completed and approved, the charts will be hermetically sealed between two pieces of plastic, each plastic piece being a minimum of 10 mils thick.

D. **Conversion from a Potable System to Recycled Water Supply -** The facilities to be converted will be investigated in detail, including review of any

record drawings, preparation of required reports, findings and determinations by the City Engineer of measures necessary to bring the system into full compliance with these Public Facilities Improvement Standards. The Owner/Developer will pay all costs associated with converting the system.

E. **Conversion from a Recycled Water System to Potable Water Supply -** If it becomes necessary to convert from a recycled water system to a potable water system, it will be the responsibility of the Owner/Developer to pay all costs associated with the conversion, including but not limited to the following items:

1. Isolation of the recycled water supply - Service will be removed and plugged at the main, or abandoned in a manner approved by the City Engineer.

2. Installation of approved backflow devices on all meter connections.

3. Removal of recycled water quick couplers and replacement with approved potable water quick couplers.

4. Notification to all personnel involved.

5. Removal of all above ground warning labels.

6. Installation of potable water lines, as necessary. Potable water connection fees will be paid prior to installation. Any previously paid recycled water connection fees will not be credited toward potable water connection fees.

7. Any other provisions necessary to meet City Water System Design and the Public Facilities Improvement Standards at the direction of the City Engineer.

F. **On-Site Pipe Identification -** All buried on-site recycled water piping will be purple colored (Pantone 522) PVC with stenciling identifying it as recycled water in accordance with the AWWA manual, "Guidelines for the Distribution for Non-Potable Water". The pipe will be installed with the manufacturing label on top. Markings will be as specified in Section 10-7 of these Public Facilities Improvement Standards, and as modified:

1. Alternate pipe with warning tape, as specified below, will be accepted as an alternative to stenciled purple colored PVC pipe only on a project-by-project basis, with prior written approval from the City Engineer.

2. The plastic warning tape will be prepared with black printing on a purple field, having the words "CAUTION: RECYCLED WATER LINE - DO NOT DRINK/ AVISA - AGUA IMPURA - NO TOMAR". The overall width of the tape will be 3-inches. The warning tape will be installed directly on top of the pipe, longitudinally and centered. The warning tape will be installed continuous for the entire length of the pipe and will be fastened to each pipe length with plastic tape banded around the pipe with fasteners no more than 5-feet apart. Taping attached to the sections of the pipe before laying in the trench will have flaps sufficient for continuous coverage. All risers between the main line and control valves will be installed with warning tape.

G. **Quick Coupling Valves -** Quick coupling valves will conform to the following:

1. **Recycled Water-** Quick coupling valves used for recycled water systems will be constructed of brass with purple rubber or vinyl cover and will have a ½-inch or 1- inch inlet.

   a. The cover will have a warning label, permanently stamped or molded into the cover, stating:

      - RECYCLED WATER
      - DO NOT DRINK/ AVISA - AGUA IMPURA - NO TOMAR

2. **Potable Water -** Quick coupling valves used in potable water systems will have a cover made of brass, metal or yellow rubber or vinyl. Quick coupling valves intended for recycled water use will not be used on potable water systems.

H. **Sprinklers -** All sprinklers used for on-site recycled water systems will have exposed surface colored purple. The exposed surface will be colored purple through the use of dyed plastic. The exposed surface will also to display either a molded or hot stamped warning, stating "DO NOT DRINK/ AVISA - AGUA IMPURA - NO TOMAR" along with an international warning symbol cautioning against drinking the water emitted through the sprinkler or an identification tag conforming to these Public Facilities Improvement Standards.

   Sprinkler risers and swing joints will be identified with purple adhesive 3- inch x 3-inch labels. Each label will state "RECYCLED WATER - DO NOT DRINK/ AVISA - AGUA IMPURA- NO TOMAR.

I. **Warning Labels -** Controller panels, wash down or blow-off hydrants on water trucks and temporary construction services may require installation of

warning labels, as directed by Director of Public Works/City Engineer. The labels will notify that the system contains recycled water that in unsafe for drinking purposes. Warning labels and signs will be developed and supplied in accordance with Title 22.

J. Valve Boxes, Meter Boxes and Tags

1. **Valve and Meter Boxes -** Valve boxes will meet the following requirements:

   a. All gate valves, manual control valves, electrical control valves, pressure relief valve for on-site recycled water systems will be installed below grade in a purple valve box with a lid identifying use of recycled water.

   b. Electrical and manual control valve boxes, and meter boxes will have a warning label permanently stamped or molded into the lid with rivets or bolts. Warning labels will be constructed of a purple weatherproof material with the warning permanently stamped or molded into the label. The warning will contain the following information:

   - RECYCLED WATER
   - DO NOT DRINK/ AVISA - AGUA IMPURA - NO TOMAR

2. **Valve and Meter Tags -** All recycled water sprinkler control valves and meters will be tagged with identification tags conforming to the following:

   a. Tags will be weatherproof plastic, 3-inch x 4-inch, purple background with permanent black lettering, stating “WARNING – RECYCLED WATER - DO NOT DRINK" imprinted on one side and "AVISA - AGUA IMPURA - NO TOMAR" on the other side.

   b. One tag will be attached to each valve as follows:

   - Attach to valve stem directly or with plastic tie wrap, or;
   - Attach to solenoid wire directly or with plastic tie wrap, or;
   - Attach to valve cover with existing valve cover bolt.

K. On-Site Recycled Water Piping - All on-site recycled water piping will be installed in accordance with the Uniform Plumbing Code and all other local governing codes, rules and regulations. All piping will be continuously and permanently marked with the manufacturer’s name or trademark, nominal size and schedule or class indicating the pressure rating.

1. **Minimum Requirements of Piping and Fittings -** The minimum class or schedule of piping and fitting will be as follows:

   a. Cast-iron fittings for ACP: ANSI 21.10 and AWWA C110

   b. Galvanized steel: Schedule 40, mild steel screwed pipe

   c. Galvanized malleable iron fittings: ANSI B-16.3.1

   d. Hard drawn copper Type K: ANSI H-26.1 and ASTM B 88

   e. Wrought copper or bronze solder fittings: ANSI B.16.22

   f. All PVC constant pressure pipe will be as follows:

   - Schedule 40 for lines 4-inches in diameter and smaller
   - C900 Class 200 or schedule 80 for lines 6-inches through 12-inches in diameter.
   - C905 Class 165 for lines larger than 12-inches.

   g. PVC intermittent pressure lateral line piping: Schedule 40 or Class 200

   h. PVC fittings: PVC Schedule 40 solvent weld and factory manufactured or Schedule 40 with rubber-ring joint. PVC schedule 80 solvent weld and factory manufactured or schedule 80 with rubber ring joint.

   - Tubing for drip irrigation systems: Manufactured from virgin polyethylene conforming to ASTM D 1248, Type Ii, Class C.
   - Ductile-iron fusion bonded epoxy coated: Class 350 AWWA C116

2. **PVC Piping -** PVC pipe and fittings will conform to the following:

   a. PVC plastic pipe and fittings will be installed below grade.

   b. All PVC pipe will be made from NSF-approved Type I, Grade I compound conforming to ASTM D1784.

   c. All PVC Schedule 40 and Schedule 80 pipe will be manufactured conforming to ASTM D1785 and D2466 and will meet requirements set forth in Federal Specifications PS-21.

d. All PVC Class 200 solvent weld and Ring-tight pipe will be manufactured conforming to ASTM D 2241 and meet requirements set forth in Federal Specification PS-22 with Standard Dimension Ration (S.D.R.) for pressure rated pipe. Pipe will be extruded from approved Class 12454-PVC with resin specifications conforming to ASTMD 1784 and rubber rings conforming to ASTM D169.

e. All PVC C900 and C905 will be manufactured conforming to ASTM D2241. Pipe will be extruded from approved Class 12454 PVC with resin specifications conforming to ASTM D1784 and rubber rings conforming to ASTM F477.

f. All pipe will be homogenous throughout, free from visible cracks, holes or foreign materials. The pipe will be free from blister, dents, wrinkles, ripples, die and heat marks. All piping will be manufactured per NSF specifications.

g. All PVC plastic pipe fittings will be rigid PVC virgin Type I, minimum schedule 40 with working pressure no lower than that of the pipe. Sockets will be tapered to conform to the outside diameter of the pipe, as recommended by the pipe manufacturer. All schedule 40 fittings will conform to ASTM D2466. All schedule 80 fittings will conform to ASTM D2464 and D2467.

h. All fittings will be injection molded of an approved PVC fitting compound featuring high tensile strength, high chemical resistance and high strength. The compound must meet the requirement described in ASTM D1784 and D2466, cell classification 13454B. Where threads are required for plastic fittings, they will also be injection molded. All tees and ells will be side gated.

- PVC solvent cement will conform to ASTM D2564.

L. On-site Potable Water Piping - All potable water piping installed within the same project as the on-site recycled water piping will be installed in accordance with the Uniform Plumbing Code and all other local governing codes, rules and regulations, and will also conform to the following provisions:

1. The pipe will be continuously and permanently marked with the manufacturer's name or trademark, nominal size and schedule or class indicating the pressure rating.

2. All potable water piping will have a blue plastic tape identifying it as a potable water line. Potable water warning tape will be a minimum of 3 inches wide and will run continuously for the entire length of each line. The tape will be attached to the top of the pipe with nylon tie-wrap banded around the warning tape and the pipe every five feet on center. Warning tape for the potable water piping will be blue in color with the words "CAUTION: POTABLE WATER LINE" imprinted in minimum 1 inch high black letter. Imprinting will be continuous and permanent.

10-13 **TESTING PROCEDURES -** Testing of the recycled water system may proceed only after joint utility crossings are completed, the sewer mains and services have passed pressure test and TV inspection, and sub grade elevations have been met. Testing prior to sub grade placement may be subject to additional pressure tests at the discretion of the City Engineer.

Tests and procedures for recycled water systems to be accepted and maintained by the City will consist of items A through D below:

A. Pressure Test in accordance with AWWA standards (C605 for PVC, C600 for DIP) and the following:

1. Contractor will verify with the City Engineer that all system valves are open prior to testing.

2. The use of test plates will be approved by the City Engineer on a case-by-case basis.

3. The City Engineer will be present during the duration of the test.

4. Tests shall be performed only after the pipeline has been properly filled, flushed, and purged of air. No more than 0.5% of the line volume in additional water will be required to raise the test pressure from 0 to 150-psi.

5. The hydrostatic test pressure shall not be less than 1.25 the maximum anticipated sustained working pressure at the highest point along the test section unless the pressure exceeds the design pressure limit for any pipe, thrust restraint, valve, fitting, or other appurtenance of the test section. In no case shall the test pressure exceed the design pressure limit for any pipe, thrust restraint, valve, fitting, or other appurtenance of the test section.

6. The test gauge will be liquid filled and capable of testing up to 300-psi.

7. No detectable leakage is allowed.

8. A mandatory 72-hour notice is required prior to any testing procedures.

B. Tying into the City System - The recycled water system may be tied into the City system upon completing and passing all the testing procedures. Tie-ins will be conducted as specified in Section 10-2 of these Public Facilities Improvement Standards. After the tie-in has been made, the Contractor will flush the segment tied-in, to the approval of the City Engineer.

C. Continuity Testing – Contractor will test continuity of the tracing wire with standard locating equipment in the presence of the City Engineer or his/her designated representative. Discontinuity in the tracing wire will be repaired. It is recommended that the Contractor perform continuity testing after subgrade is made, but before asphalt is placed. Final continuity testing will take place after asphalt is placed and all valve boxes are raised

D. Cross-Connection Testing - Testing for cross-connections will be in accordance with the Uniform Plumbing Code, prior to use.

1. Private System (On-Site) - Tests and procedures of recycled water systems for private use and maintenance will conform to the following as described above.

   Pressure Testing - On-site testing will be the same procedure as off-site test except the test pressure will be 100- psi.

10-14 <u>REPAIRING INSTALLED IMPROVEMENTS-</u> All PVC and DIP recycled water mains will be repaired by the following procedures:

A. Damaged or failed pipe sections will be removed and replaced with new pipe in the presence of the City Engineer. Replacement can be accomplished by the use of City approved ductile iron mechanical joint repair sleeves. Pipe restraints and thrust blocks will be required on all bends.

B. After the repair has been completed, the excavation will be backfilled and compacted to grade as specified. The repairs will then be re-tested per these Public Facilities Improvement Standards.

C. At the direction of the City Engineer, the Contractor will repair damage to the polyethylene encasement as described within ANSI/AWWA C105/A21.5 or will replace all damaged polyethylene film sections.

10-15 **PUNCH LIST PROCESS -** When the Contractor feels all improvements are substantially complete, a punch list of final outstanding items may be requested.

10-16 **MATERIALS**

A. Approved Equal - The words "approved equal" will mean any material deemed by the City to be acceptable for use within the City's recycled water system as compared to products of specified manufacturers. Specifications for all materials (submittals) to be used on the project will be submitted to the City prior to start of construction. The submittal will include a letter with:

1. **Product -** A description of the product and the appropriate materials specification section number, including description of use.

2. **Contact -** The name and telephone number of the contact person for the proposed product.

3. **Reference -** A list of other agencies who are using the proposed product (Including names and telephone numbers).

   Address the letter to the City Engineer. City staff may request a sample of the product for review. The Contractor will submit all material for review 35-days prior to contract award. All submittals will include documentation verifying contract award date. Contractors will allow 2 to 4 weeks review time by the City.

B. Unapproved Materials - Materials not approved for use on the project will be removed from the site within 24-hours if requested by the Director of Public Works/City Engineer.

C. Recycled Water Main - Unless noted on the approved plans, all recycled water mains will be either Polyvinyl Chloride Pressure Pipe (PVC) or Ductile Iron Pipe (DIP).

1. **PVC Pressure Pipe -** PVC Pressure Pipe will be manufactured to a minimum Class 200 rating and will conform to the "Standard for Polyvinyl Chloride (PVC) Pressure Pipe, 6-inches through 12-inches, for Water" (AWWA C900), and will also include the following:

   a. PVC Pressure Pipe will be purple in color with stenciling identifying it as recycled water in accordance with AWWA manual "Guidelines for the Distribution of Non-Potable Water" and will have been manufactured within 18 months of installation. The pipe will be manufacturer date coded, and the City is to be provided the

manufacturer's coding for translation. Sun damaged pipe may be rejected at the City Engineer's discretion. Markings on the PVC pipe will be placed continuously on two sides of the pipe and will include:

- "CAUTION: RECYCLED WATER - DO NOT DRINK/ AVISA - AGUA IMPURA - NO TOMAR"
- The pressure rating of the pipe, in pounds per square inch (psi).
- The ASTM designation

b. Rubber rings will conform to the "Standard Specifications for Elastomeric Seals (Gaskets) for Joining Plastic Pipe" (ASTM F477).

c. Approved PVC Pressure Pipe manufacturers include: Certain Teed Certa Lok, Diamond Plastics Corporation, JM Eagle, Vinyl Tech, or approved equals. (All pipes will be made in USA)

2. **Ductile Iron Pipe -** DIP will be Class 350 and manufactured to conform to the standards ANSI/AWWA C150/21.50 thickness design of ductile-iron pipe and to "Ductile Iron Pipe Centrifugal Cast in Metal Molds or Sand-Lined Molds for Water and Other Liquids" (ANSI/AWWA C151/A21.51) and will be made in USA and will also include the following:

a. DIP shall be cement mortar lined in accordance with the standard for "Cement Mortar Lining for Ductile Iron Pipe and Fittings for Water" (ANSI/AWWA C-104/A21.4).

b. Approved DIP manufacturers include: Pacific States, Tyler, US Pipe, or approved equals. (All pipe will be made in USA)

D. Services

1. **Copper Tubing -** Copper tubing will be seamless, annealed copper tube and will conform to ASTM B88 "Standard Specification for Seamless Copper Water Tube" and will be Type K Copper will be grade UNS-C122200. For 1-inch diameter, use Type K Rolled Soft Copper. For diameters ranging from 1.25-inch to 2-inches, use Type K Soft 20-foot Sticks. Approved tubing includes: Cambridge-Lee, Mueller Streamline, or approved equal.

2. **Brass Material**

a. **Brass pipe -** Brass pipe will conform to ASTM B43. Listings of approved pipes include: Cambridge-Lee, and Federal WW-351, or approved equal.

b. **Brass fittings -** Brass fittings will conform to ANSI Standard B16.15, B16.24, B2.1, and T-94-1 and be a minimum of Class 125. A listing of approved manufacturers includes: Lee Brass, Merritt Brass, or approved equal.

c. **Brass fittings for Copper Tubing -** A listing of approved manufacturers for brass fittings for copper tube includes: Jones, Mueller or approved equal. Parts reference numbers are shown below: (see Standard Detail RW-7).

1. Jones (1-inch through 2-inch):

Jones Super Grip CTS X CTS	E-2609SG
Jones Super Grip CTS X MIP	E-2605SG
Jones Super Grip CTS C FIP	E-2607SG
Comp. x Comp. (2" only)	E-2609SG

2. Mueller (1-inch through 2-inch):

H-15403N	CTS x CTS
H-15451N	CTS x FIP
H-15428N	CTS x MIP

3. **Corporation Stops**

Corporation stops will be male, iron pipe thread by compression, insulated and full throat ball valve design. A corporation stop will be installed at the water main for all service laterals two inches and smaller. Approved manufacturers of corporation stops include: Mueller, Jones, Ford, or approved equal. Part reference numbers are as shown below: (refer to Standard Detail W-3).

1. Mueller: Part #B-25008N (CC X CTS)
Part #B-25028N (IP X CTS)
Part #B-35028N (MIP X CTS)

2. Jones: Part #E1991 (MIPXCTS SG)
Part #E1993 (MIPxFIP)
Part #E1935SG (MIP X 110CTS)
Part #E1937SG

3. Ford: Part #FB 1700 (for ARV's and Blowoffs)

4. Curb Stops

a. Approved curb stop manufacturers include: Jones, Mueller, or approved equal. Part reference numbers are shown below: (refer to Standard Detail W-4):

1. Jones: Part #J1921WSG (110 CTS X FIP w/ lockwing)
2. Mueller: Part #B-25166N (Flared X FIP w/ lockwing)

5. Dielectric Tape - Approved manufacturers for dielectric tape include Polyken #932 Hi-Tack joint wrap tape or approved equivalent flexible dielectric tape.

6. Service Saddles

a. PVC Pressure Pipe Service Saddles manufacturers include: Jones, Mueller, or approved equal. Part reference numbers are as indicated below.

1. Jones: 4-inch through 12-inch saddles with 1-inch through 2-inch tap, Part #J-996

2. Mueller:

Saddle Size	Part #
4-inch	H13490
6-inch	H13491
8-inch	H13492
10-inch	H13493
12-inch	H13494

b. DIP Service Saddles manufacturers include: Jones, Mueller, or approved equal. Part reference numbers are as indicated below:

1. Jones (4-inch through 12-inch saddles with 1-inch through 2-inch taps): Part # J-979

2. Mueller 1-inch through 2-inch taps:

Saddle Size	Part #
4-inch	BR2B0474IP_ _ _*
6-inch	BR2B0684IP_ _ _*
8-inch	BR2B0899IP_ _ _*
10-inch	BR2B1104IP_ _ _*
12-inch	BR2B1314IP_ _ _*

* The last three numbers denote tap sizes
(0.75”=075, 1”=100, 1.50”=150, 2”=200)

E. Appurtenances

1. **Air Release Valves -** Air release valves will be fusion bonded epoxy coated (per AWWA C116), vacuum break type. A listing of approved manufacturers includes: Crispin, Val-Matic, or approved equal. Part reference numbers are as shown below:

Crispin	Part #	Val-Matic	Part #
1-inch	UL10	1-inch	201C-M
2-inch	UL20	2-inch	201C-M
3-inch	UL31	3-inch	201C-M
4-inch	UL41	4-inch	201C-M
6-inch	UL61	6-inch	206C-M
8-inch	UL81	8-inch	206C-M

2. **Blocking for Boxes -** A listing of approved materials includes: Concrete Stone 9-inch x 1-inch x 16-inch, Slump Block 3-inch x 3-inch x 16-inch, standard concrete brick, or approved equal.

3. **Blow Off -** Approved manufacturers and products include: Kupferle, Eclipse #78 (2-inch) or approved equal.

4. **Fittings**

   a. **Fittings for PVC Pipe** - Unless otherwise specified or shown on the approved plans, all fittings to be used with PVC Pressure Pipe will conform to the standard for "Ductile Iron Compact Fittings for Water and Other Liquids" (ANSI/AWWA C153/A21.53). Approved fitting manufacturers include Tyler and US Pipe. (All fittings will be USA made).

      1. All ductile iron fittings will be coated with an 8 mil nominal thickness fusion bonded epoxy conforming to the requirements of ANSI/AWWA C550 and C116/A21.16

2. All fittings will be wrapped in accordance with these Improvement Standards.

3. The Contractor may use a ductile iron mechanical joint flange adapter designed for AWWA C900 pipe with connecting PVC Pressure Pipe to flanged fittings or flanged valves. Pipe ends must be cut smooth and square with no bevel. The joint will be restrained to the PVC pipe using an approved restraint method, such as the Romac 600 Series Pipe Restraining System.

b. **Fittings For Ductile Iron Pipe -** Unless otherwise specified or shown on the approved plans, all fittings to be used with DIP will employ either mechanical joints or restrained joints conforming to the standard for "Ductile-Iron Compact Fittings for Water and Other Liquids" (ANSI/AWWA C153/A21.53 and AWWA C110). Approved fitting manufacturers include Tyler and US Pipe. (All fittings to be USA made)

1. All ductile iron fittings will be coated with an 8 mil nominal thickness fusion bonded epoxy conforming to the requirements of ANSI/AWWA C550 and C116/A21.16

2. All fittings will be wrapped in accordance with these Improvement Standards.

5. **Gaskets -** Gaskets will conform to the following specifications:

a. **Flange Gaskets -** Flange gaskets will be neoprene rubber, red rubber, US Pipe Flange Tyte, or approved equal.

b. **Push On Gaskets -** Per manufacturer's specifications and City approval.

c. **MJ Gaskets -** Per manufacturer's specifications and City approval.

d. **Insulting Flange Gaskets -** Insulating flange gaskets will be USSO Standard B.16.21 insulation flange kits, Type E Full Face Gasket with two-side insulation as manufactured by Calpico, or approved equal.

6. **Location Stakes -** A list of approved off-site location stakes include: Carsonite CRM3 072 in purple with anchor barb kit or approved equal with caution stickers attached and organization identification decal stating: CITY OF LINCOLN – CALL BEFORE DIGGING (916) 434-2450. Caution stickers will state: CAUTION RECYCLED WATER PIPELINE.

7. **Mainline Valve Lockout -** A list of approved manufacturers and part reference numbers include: SW Services PC800, DC600, or approved equal.

8. **Manhole Frame and Cover -** A listing of approved manufacturer and part reference number includes: South Bay Foundry (SBF-1920 RV-W), or approved equal.

9. **Meters -** All meters are to be purchased by the Builder/Developer from City and installed by the City DPW at (916) 434-2450. Meters to be auto read with touch pad. Meters to be Census Technology SR II.

10. **Meter Idlers -** A listing of approved meter idler manufacturers includes: Ford or approved equal. Part reference numbers are shown below:

Ford	Part #
1-inch	IDLER-4P
1.5-inch	IDLER-6-NL

11. **Meter Setters -** A listing of approved meter setter manufacturers includes: Mueller or approved equal. Part reference numbers are shown below:

Mueller	Part #
3/4-inch to 1-inch	B-24118-2
1.5-inch to 2-inch	B-2423-99000

12. **Meter Spud Couplers -** A listing of approved meter spud couplers manufacturers includes: Ford, Jones, Mueller, or approved equal. Part reference numbers are shown below:

Ford	Part #	Mueller	Part #
1.5-inch to 2-inch	CF31-XX-NL	1-inch	H-1421N

13. **Nuts and Bolts**

    a. **Flange Bolts and Nuts -** Flange bolts and nuts-flange bolts and nuts shall conform to a minimum ASTM#A307 or as approved by City Engineer. Bolts less than ¾-inches in diameter shall be a minimum Grade B (heavy hex) or as approved by City Engineer. Bolts ¾-inches and larger in diameter shall be a minimum Grade A (standard hex) or as approved by City Engineer.

b. **Meter Bolts -** Meter bolts are to be stainless steel, Grade 316 with brass nuts.

c. **Tee Bolts -** Steel bolts are to be 3/4-inch high strength, low alloy steel with a heavy nut, conforming to AWWA Standard C111-90.

14. **Nylon Bushings -** Nylon bushings will be 76-76R, 2 1/2-inch NST x 2-inch Pipe.

15. **Patching Material -** A listing of approved manufacturers and part reference numbers for patching of DIP includes: Cop-Coat Carboline Company (Bitumastic No. 50, Coal Tar), or approved equal.

16. **Polyethylene Encasement -** Polyethylene film for encasement will have a minimum thickness of 8-mils. The minus tolerance on thickness will not exceed ten percent of the nominal thickness. The encasement of pipe with polyethylene will be in either type 1 or sheet form.

    Polyethylene film will be manufactured from a Type 1, Class C raw polyethylene material conforming to "Polyethylene Encasement for Ductile-Iron Piping for Water and Other Liquids" (ANSI/AWWA C105/A21.5). Approved manufacturers include: Fee Spec's-LP378D Northtown, Fulton Enterprise Inc., Global Polymer Tech, Unisource, or approved equal.

17. **Pressure Regulators-** A listing of approved all brass pressure regulator systems include: Watts (1-inch through 2-inch, UB5-series), Wilkens (1-inch through 2-inch 600 series and 2.5-inch through 3-inch 500YSBR), or approved equal.

18. **Restraints**
    a. **PVC -** Approved restraint systems for PVC Pressure Pipe includes: Certain Teed Certa Lok (for straight runs only), EBAA Iron 2000PV, Romac Grip Rings, or approved equal.

    b. **DIP - Approved restraint systems for DIP includes:** Field Lok Gaskets by US Pipe (3-inches through 24-inches diameter only), Mega Lug 1100 Series, TR Flex or approved equal.

19. **Riser stock -** Riser stock will be 6-inch diameter Schedule 40 PVC inside meter boxes. Riser stock will be 8-inch diameter PVC C900 for all main line valves.

20. **Sampling Stations -** Sampling stations will be purchased through City Public Services at (916) 434-2450.

21. **Sap Seal -** A listing of approved products includes: Sap Seal Products Heavy Hex with Grease, or approved equal.

22. **Service Boxes and Lids -** All box lids are to be permanently marked with the appropriate label (i.e., Recycled Water, CPT, etc.). A list of approved box manufacturers includes: Christy or approved equal. Part reference numbers are shown below: (Traffic lids will be approved by the Director of Public Works/City Engineer)

Size	Christy Park Number
1-in	Box-B30, FL30, Cover-FL-30-T
1-inch (double service)	Box-B2436, Cover-FL2436
1 1/2-in to 2-in	Box-B40, Cover-B40-61J, Cover-B40T
3-in to 4-in	Box-B48, Cover-B48-62J, Cover-B48T2
6-in to 10-in	Box-B48, R-17924 PIT, Cover-R-17-52H
Note: All covers will have a 1.75-inch probe hole offset at the upper 1/3 portion of the lid. Double services boxes have two probe holes in diagonal quadrant of the lid.	

23. **Silicone -** Silicone will be clear, 100% silicone with a 25-year life, or approved equal.

24. **Telemetering Conduit -** Telemetering conduit will be minimum ½-inch diameter Schedule 40 PVC or polyethylene ("Inter-Duct") pipe. Both will have a nylon pull string.

25. **Traffic Boxes -** A list of approved traffic box manufacturers include: Brooks, Christy, or approved equal. Parts reference numbers are shown below:

Brooks	Part #
17 x 30 Box-Full Traffic Concrete	#6-T
24 x 36 Full Traffic Concrete	100FHH30-PG4
30 x 48 Full Traffic Concrete	200FHH36-PG4

Christy
V-64 Box
V-64 Box x 6-inch Extension
V-64 Cover Traffic Load
G05 Box with Lid
B40 Box

26. **Tracing Wire -**Tracing wire will be 10-gauge minimum UF rated solid copper with plastic insulation.

27. **Tracing Wire Connectors -** Tracing wire connectors will be split-bolt type connectors. Listings of approved products include: Permanent Seal- Wire Connectors- Part #97811 or approved equal.

28. **Tracing Wire Mastic Tape Seal -** Tracing wire mastic tape will be 3M Mastic Tape #2229 or approved equal.

29. **Valves**

    a. **Butterfly Valves -** Butterfly valves to be used on diameters ranging from 16-inch to 72-inch. A list of approved valves include: Pratt Ground Hog (Holiday free epoxy coated), Mueller Lineseal III (Holiday free epoxy coated), or approved equal. Certification will be provided by the valve manufacturer stating the epoxy lining is holiday free. (Made in USA)

b. **Gate Valves -** Gate valves for 2-inch - 2 1/2-inch services will be NIBCO-113 Bronze, or approved equal. Gate valves to be used on diameters ranging from 3-inch to 12-inch and will be resilient seat or wedge and meet C509 Class C Specifications. A list of approved valves includes: M & H 4067 RW Gate Valve, Mueller A-2361 RS Gate Valve, US Pipe Metro Seal 250, or approved equal. (Made in USA)

c. Two part epoxy repair kit will be provided by valve manufacturer.

30. **Valve Boxes -** All valve boxes in street and other traffic areas will be designed to H-22 loading conditions. A list of approved manufacturers and part reference numbers include: Christy Type G5, Christy Type B17 by 30, BES Type G5, or approved equal.

31. **Water Pipe Marking Tape -** 12" wide non-detectable warning tape. Approved manufacturers and materials include: Northtown Company, Christy, or approved equal.

32. **Zinc Caps -** A listing of approved manufacturers include: Mars, or approved equal. Part reference numbers are shown below:

Mars: 7/16-inch to 1/2-inch – 2.5 ounce weight
5/8-inch to 1-inch – 6 ounce weight

[THIS PAGE INTENTIONALLY LEFT BLANK]

RECYCLED WATER DETAILS

Typical Recycled Water Trench Detail RW-1
Recycled Water Service Trench Detail RW-2
Recycled Water Gate & Buttery Valve & Box..... RW-3
Recycled Water 1" & 2" Air Release Valve RW-4
Recycled Water 2" Blow Off Valve RW-5
Recycled Water 4" Blow Off Valve..... RW-6
Recycled Water-Residential 1" x 1" Service Line..... RW-7
Recycled Water-Commercial 1 ½ & 2" Irrigation Service RW-8
Recycled Water-Commercial 3" and Larger Service..... RW-9

[THIS PAGE INTENTIONALLY LEFT BLANK]

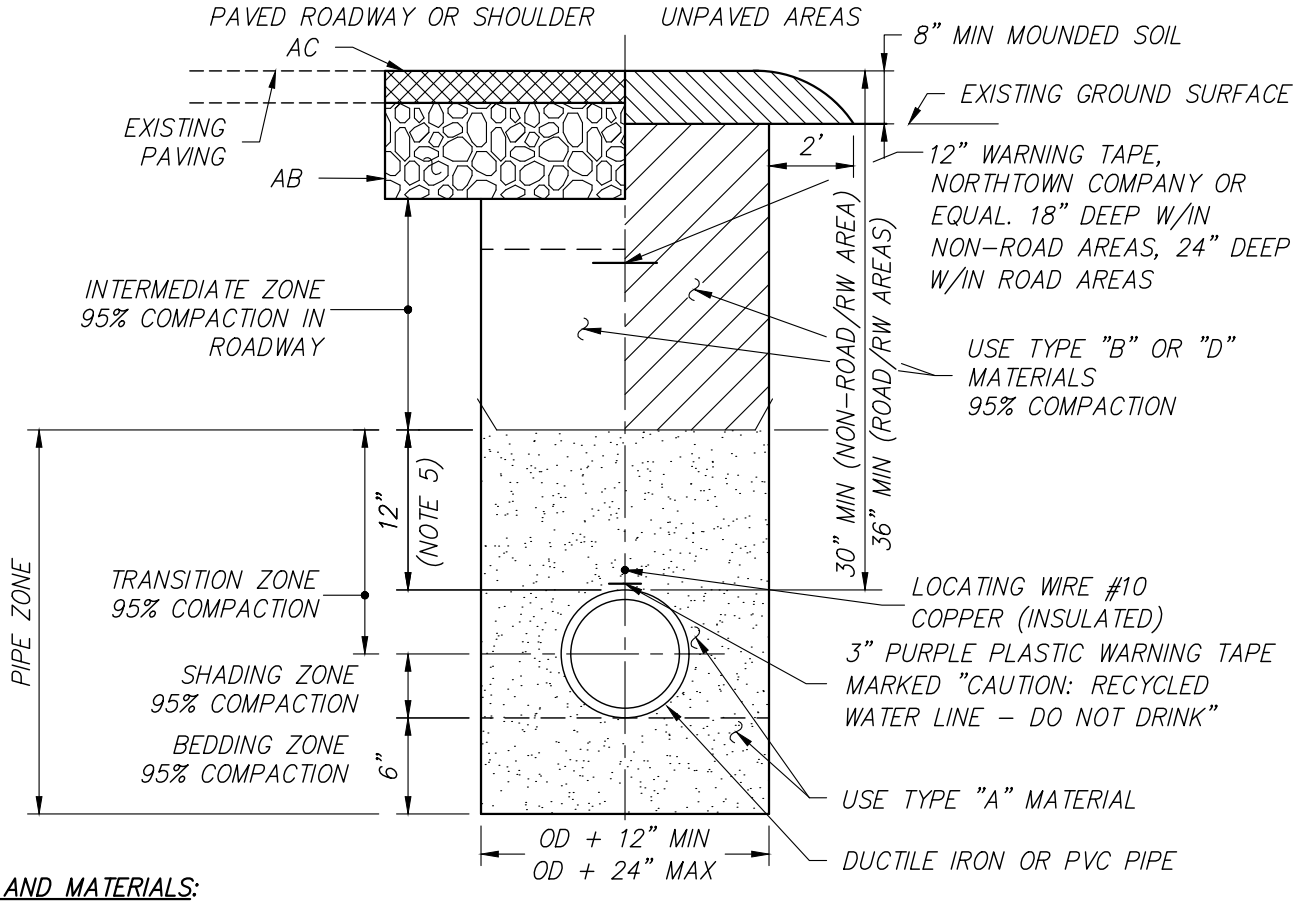

BEDDING AND MATERIALS:

TYPE "A" MATERIAL: 3/8" MINUS IMPORTED SCREENED SAND WITH MINIMUM SAND EQUIVALENT OF 50 PER CTM 217. ALL GRADATIONS TO BE APPROVED BY CITY PRIOR TO CONSTRUCTION.

TYPE "B" MATERIAL: CLASS 2 AGGREGATE BASE PER CALTRANS STANDARD SPECIFICATIONS.

TYPE "D" MATERIAL: CRUSHED ROCK OR SOIL-ROCK MIXTURE (NATIVE) NOT TO EXCEED 3". UP TO A 6" MINUS MATERIAL MAY BE USED WITH SPECIAL CONSIDERATIONS AND CONDITIONS APPROVED BY CITY AND GEOTECHNICAL ENGINEER. THE MATERIAL WILL BE COMPLETELY FREE OF WOOD, ROOTS OR OTHER DELETERIOUS MATERIAL. MATERIAL NOT BE USED WITHIN 24" OF TOP OF PIPE WITHOUT CITY ENGINEERS APPROVAL. COMPACTION WILL BE BY VIBRATORY EQUIPMENT OR OTHER APPROVED DEVICES. THE CITY MAY REQUIRE THAT THE MATERIAL BE SCREENED. A LAYER OF GEOTEXTILE FABRIC WILL BE PLACED BETWEEN THE PIPES AND INTERMEDIATE BACKFILL ZONE. MATERIAL WILL ONLY BE USED WITH GEOTECHNICAL ENGINEER'S RECOMMENDATION AND WITH APPROVAL OF THE CITY ENGINEER.

NOTES:

1. CREEK CROSSING OR SHALLOW TRENCH SHALL REQUIRE SPECIAL PIPE PER APPROVAL OF CITY ENGINEER.
2. BEDDING FOR OTHER APPROVED PIPE TO BE APPROVED BY CITY ENGINEER AND PER ASTM C12.
3. CITY WILL REQUIRE CUT-OFF WALLS AND TRENCHES TO CONTROL PERMEABILITY AND/OR REQUIRE GEOTEXTILE BARRIER WRAP FOR MATERIAL NOT MEETING A TYPE "A" OR "B" MATERIAL SPEC.
4. SHOVEL SLICING TO BE USED ALONG WITH MECHANICAL (VIBRATORY) AT 12" MAX LOOSE LIFTS.
5. TYPE "D" MATERIAL REQUIRES 24" INCHES BACKFILL ABOVE PIPE.
6. TYPE "D" MATERIAL MAY ONLY BE USED WITH CITY ENGINEER APPROVAL AND GEOTECHNICAL ENGINEER RECOMMENDATION.
7. PIPE TO BE PURPLE PVC FOR DIAMETERS 12" AND LESS. (MIN. PRESSURE CL 200). PIPE TO BE DUCTILE IRON FOR DIAMETERS GREATER THAN 12". MIN. PRESSURE CLASS 250 FOR 16" OR LARGER AND 350 FOR 12" OR SMALLER. ALL DUCTILE IRON PIPE TO BE CLASS 50. SEE SECTION 10 OF THE CITY IMPROVEMENT STANDARDS.

CITY OF LINCOLN
ENGINEERING DEPARTMENT

TYPICAL RECYCLED WATER TRENCH DETAIL

REVISIONS:	DATES:	APPROVED:
		CITY ENGINEER DATE

SCALE: NONE
DATE: SEPTEMBER 2019
DRAWN BY: C.G.

RW-1

NOTES:

1. DEPTH OF BEDDING TO VARY UPON EXISTING SOIL CONDITIONS PER APPROVAL OF CITY.
2. 12" MIN. IF TYPE "D" MATERIAL IS USED WITHIN INTERMEDIATE ZONE. TYPE "D" MATERIAL TO BE APPROVED BY SOILS ENGINEER AND CITY ENGINEER.

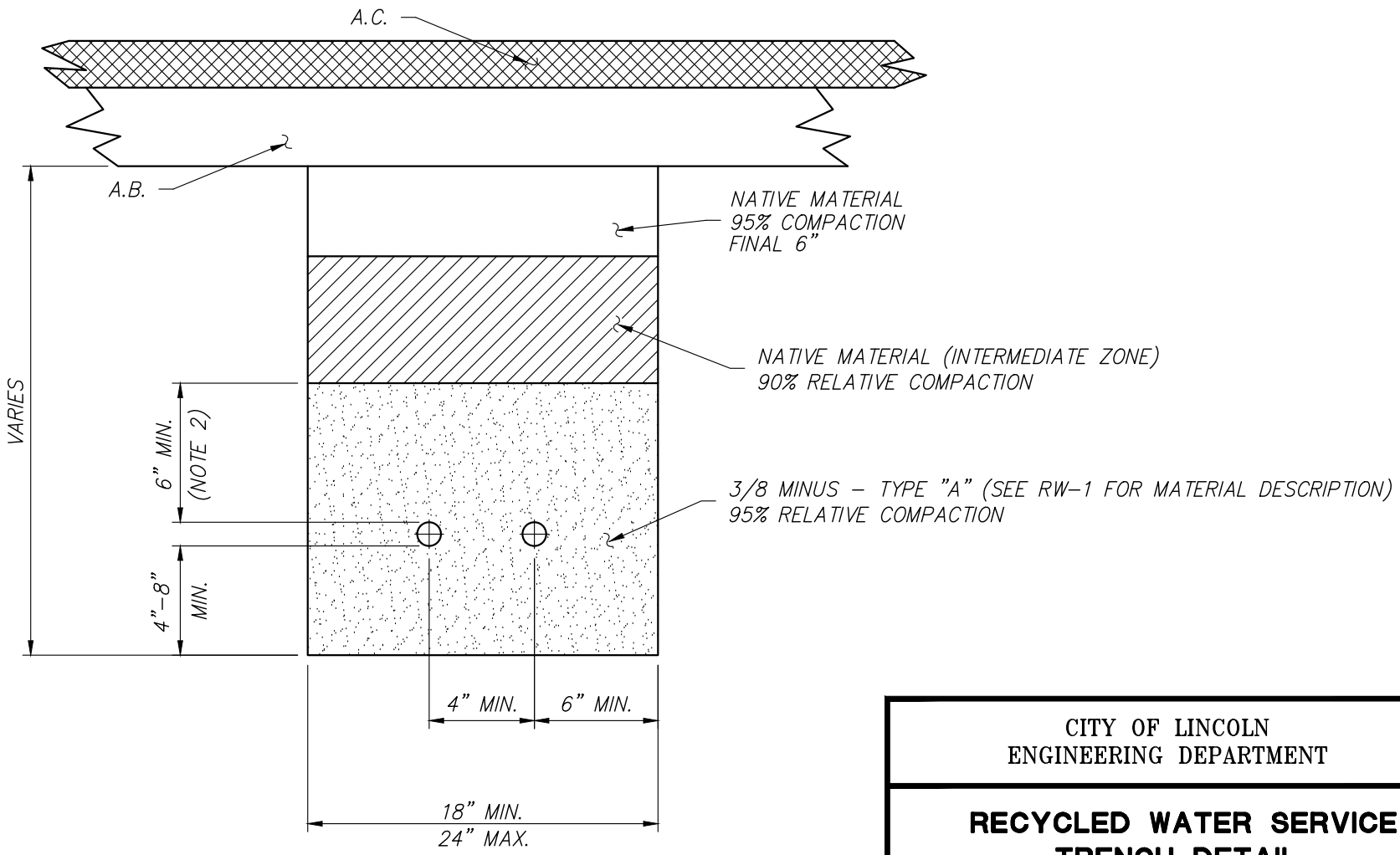

CITY OF LINCOLN
ENGINEERING DEPARTMENT

RECYCLED WATER SERVICE TRENCH DETAIL

REVISIONS:	DATES:	APPROVED:
		CITY ENGINEER DATE

SCALE: NONE
DATE: SEPTEMBER 2019
DRAWN BY: C.G.

RW-2

BOX

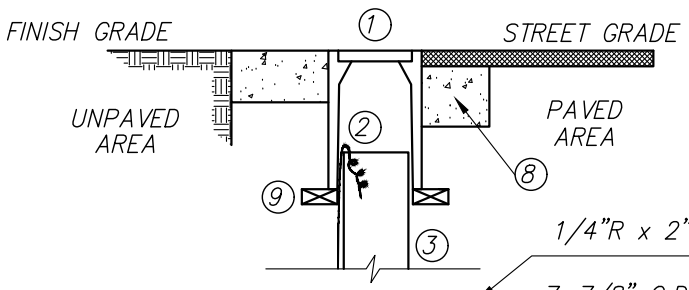

BUTTERFLY VALVE OR GATE VALVE

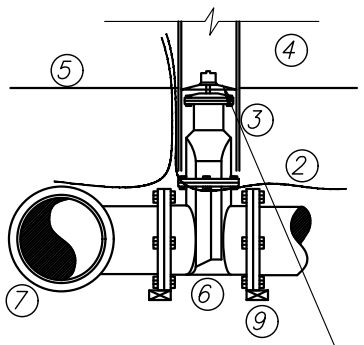

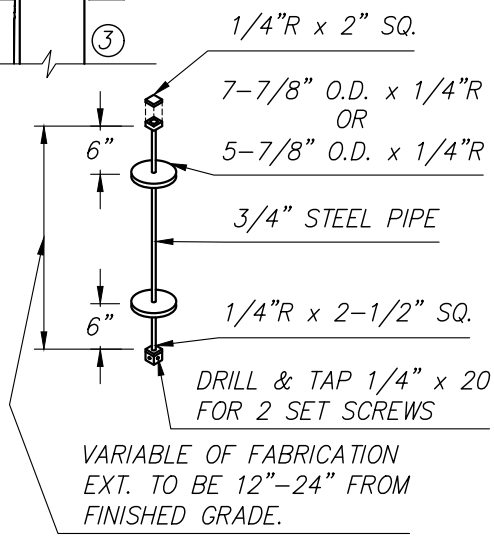

VALVE OPERATING NUT EXTENSION

REQUIRED WHERE VALVE NUT IS IN EXCESS OF 40" DEEP BELOW FINISH GRADE.

NOTES:

1. TRACING WIRE THROUGH VALVE BOXES SHALL BE PLACED OUTSIDE OF RISER BUT INSIDE OF BOX.
2. TRACING WIRE SHALL BE SPLICED INSIDE THE VALVE BOX PER DETAIL BELOW AND SHALL LOOP WITHIN THE VALVE BOX WITH 18" OF SLACK WIRE.
3. ALL GATE AND BUTTERFLY VALVES SHALL BE CENTERED IN A ONE PIECE RISER STOCK WITH THE USE OF A RISER ALINER.
4. OPERATOR NUTS DEEPER THAN 36 INCHES FROM FINISH GRADE SHALL REQUIRE A VALVE NUT EXTENSION 2 FEET MINIMUM IN LENGTH.
5. VALVE BOXES LOCATED IN A PAVED AREA SHALL BE PLACED IN A 6"x6" CONCRETE COLLAR. PLACEMENT SHALL BE CONTIGUOUS WITH THE UNDERSIDE OF THE PROPOSED PAVEMENT.
6. VALVE BOXES LOCATED IN AN UNPAVED AREA SHALL BE PLACED IN A 12" DEEP BY 6" WIDE CONCRETE COLLAR. THE COLLAR SHALL BEGIN AT FINISH GRADE.
7. INSTALL CONCRETE BLOCKING UNDER ENTIRE PERIMETER OF BOX.
8. VALVES AND FITTINGS SHALL BE WRAPPED IN 8 MIL POLYETHYLENE.
9. PIPE AND VALVES TO BE MARKED PER SECTION 10 OF THE CITY IMPROVEMENT STANDARDS.

MATERIALS:

1. CONCRETE VALVE BOX
2. #10 INSULATED TRACING WIRE OUTSIDE RISER
3. 8" RISER STOCK
4. RISER ALIGNER
5. PLASTIC BACKFILL TAPE
6. GATE VALVE FOR 12"≤ AND BUTTERFLY VALVES FOR 16" ≥
7. DUCTILE IRON TEE W/ RESTRAINTS
8. CONCRETE COLLAR (SEE NOTES 5 & 6)
9. CONCRETE BLOCKING (SEE NOTES)

WIRE SPLICE NOTES:

1. TWIST THE WIRE A MINIMUM OF (5) TIMES ON EACH END.
2. INSTALL SPLIT BOLT CONNECTOR.
3. COVER THE ENTIRE SPLICE WITH MASTIC TAPE WRAP
4. WRAP MASTIC WITH VINYL TAPE.

* SOLDERING MAY BE INCLUDED IN ADDITION TO THE ABOVE.

TRACING WIRE SPLICE OR EQUAL

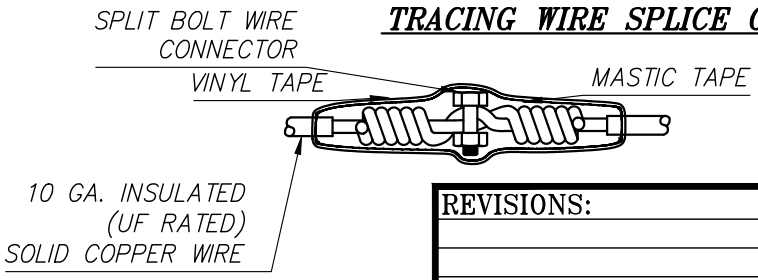

CITY OF LINCOLN
ENGINEERING DEPARTMENT

RECYCLED WATER GATE AND BUTTERFLY VALVE AND BOX

REVISIONS:	DATES:	APPROVED:
		CITY ENGINEER DATE

SCALE: NONE
DATE: SEPTEMBER 2019
DRAWN BY: C.G.

RW-3

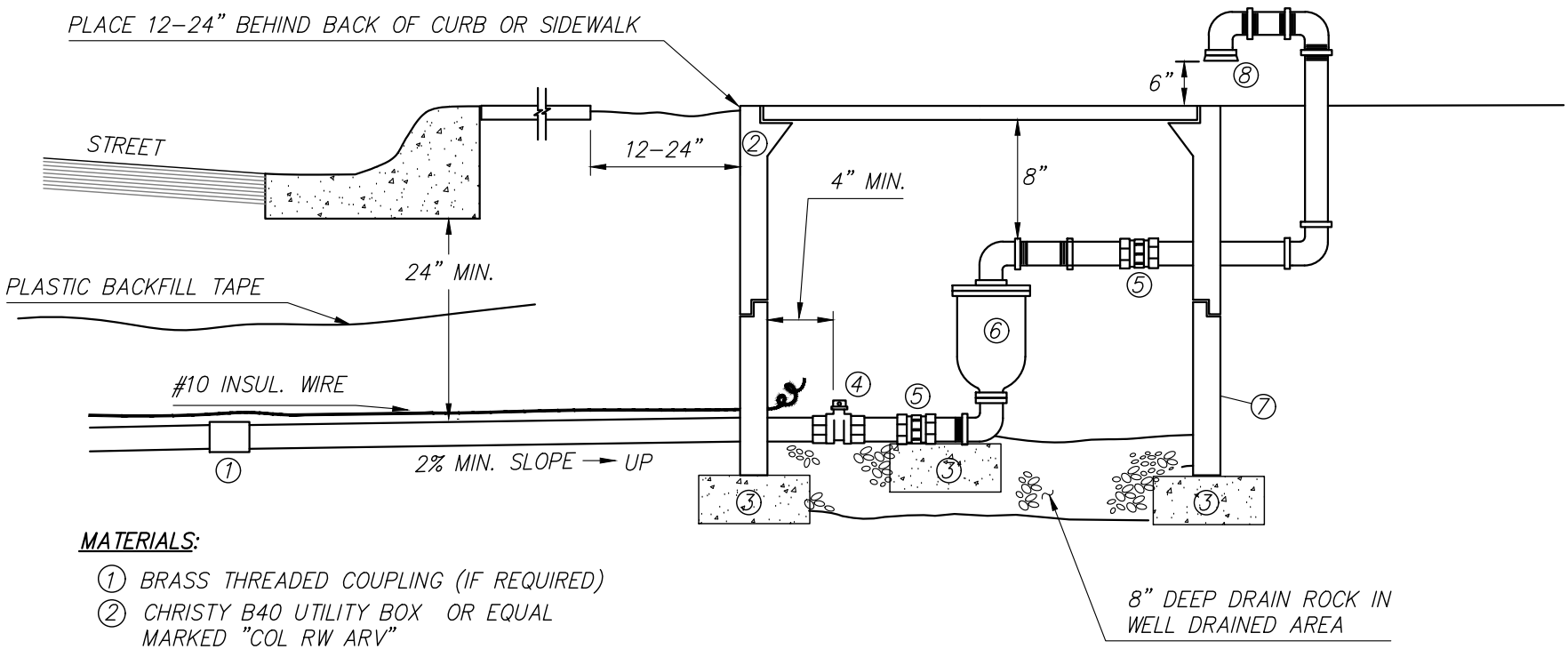

MATERIALS:

1. BRASS THREADED COUPLING (IF REQUIRED)
2. CHRISTY B40 UTILITY BOX OR EQUAL MARKED "COL RW ARV"
3. CONCRETE BLOCK SUPPORTS
4. CURB STOP – MUELLER B–20200 OR EQUAL (F.I.P. x F.I.P.)
5. BRASS UNION
6. COMBINATION AIR / VACUUM VALVE
7. CHRISTY EXTENSION SPOOL (IF NECESSARY) – CHRISTY B40 BOX
8. BRASS CAP WITH 9 DRILLED 1/16" HOLES OR APPROVED EQUAL ADD 20 MESH STAINLESS STEEL SCREEN TO VENT.

NOTES:

1. BURIED PIPE AND FITTINGS SHALL BE WRAPPED WITH 8 MIL POYETHYLENE OR APPROVED EQUAL.
2. PIPE AND VALVES SHALL BE MARKED IN ACCORDANCE WITH SECTION 10 OF THE CITY IMPROVEMENT STANDARDS.

CITY OF LINCOLN
ENGINEERING DEPARTMENT

RECYCLED WATER
1" AND 2" AIR RELEASE VALVE

REVISIONS:	DATES:	APPROVED:
		CITY ENGINEER DATE

SCALE: NONE
DATE: SEPTEMBER 2019
DRAWN BY: C.G.

RW-4

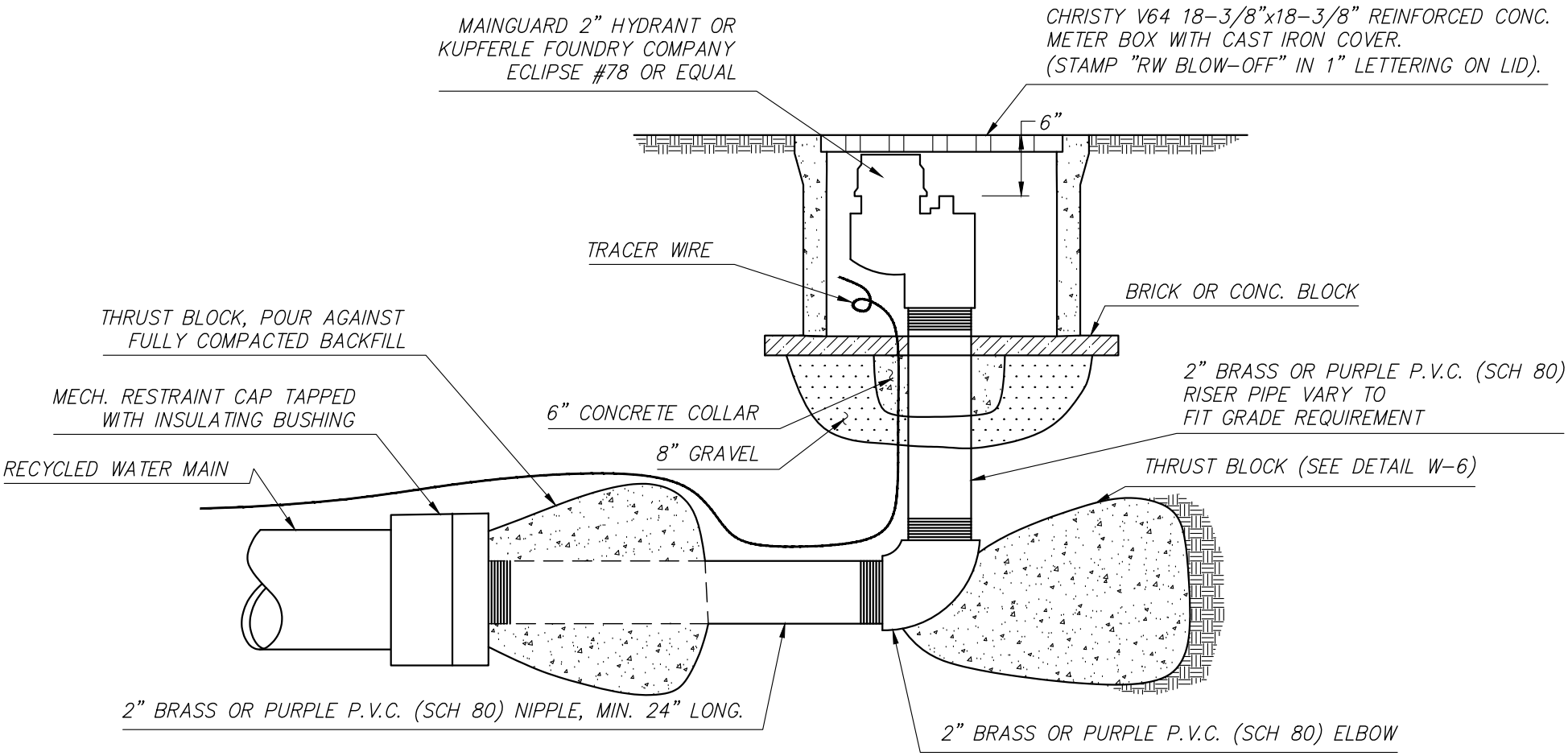

NOTES:
1. IN-LINE BLOW-OFFS TO BE TAPPED W/ JONES # J-996 OR EQUAL W/ TRANSITION FROM COPPER TO BRASS, WITH CORROSION PROTECTION.
2. PIPE AND VALVES SHALL BE MARKED IN ACCORDANCE WITH SECTION 10 OF THE CITY IMPROVEMENT STANDARDS.

CITY OF LINCOLN
ENGINEERING DEPARTMENT

RECYCLED WATER
2" BLOW OFF VALVE

REVISIONS:	DATES:	APPROVED:
		CITY ENGINEER DATE

SCALE: NONE
DATE: SEPTEMBER 2019
DRAWN BY: C.G.

RW-5

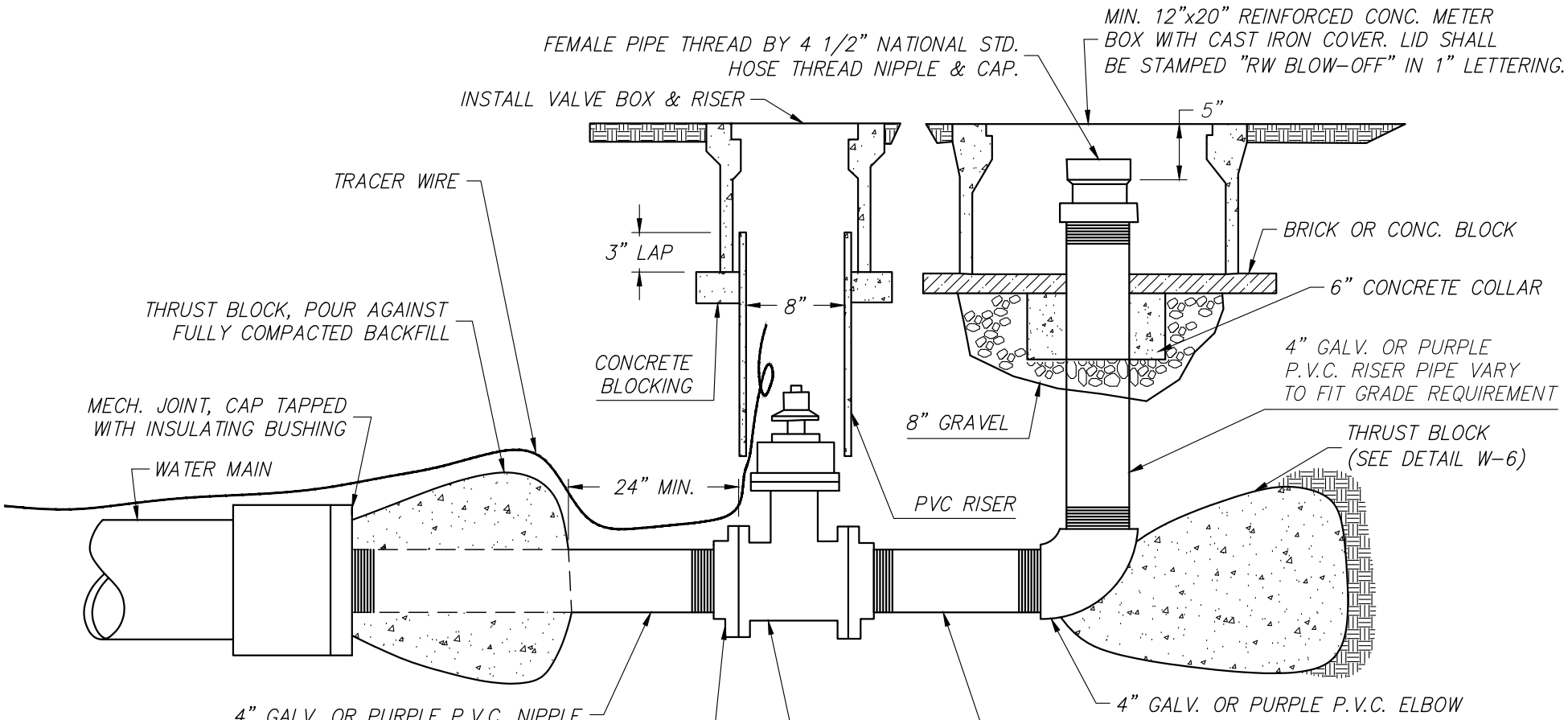

NOTE: FOR USE IN SPECIAL SITUATIONS W/ APPROVAL OF CITY ENGINEER FOR PIPES GREATER THAN 16".

SAG POINT CONNECTION

CITY OF LINCOLN
ENGINEERING DEPARTMENT

RECYCLED WATER
4" BLOW OFF VALVE

REVISIONS:	DATES:	APPROVED:
		CITY ENGINEER DATE

SCALE: NONE
DATE: SEPTEMBER 2019
DRAWN BY: C.G.

RW-6

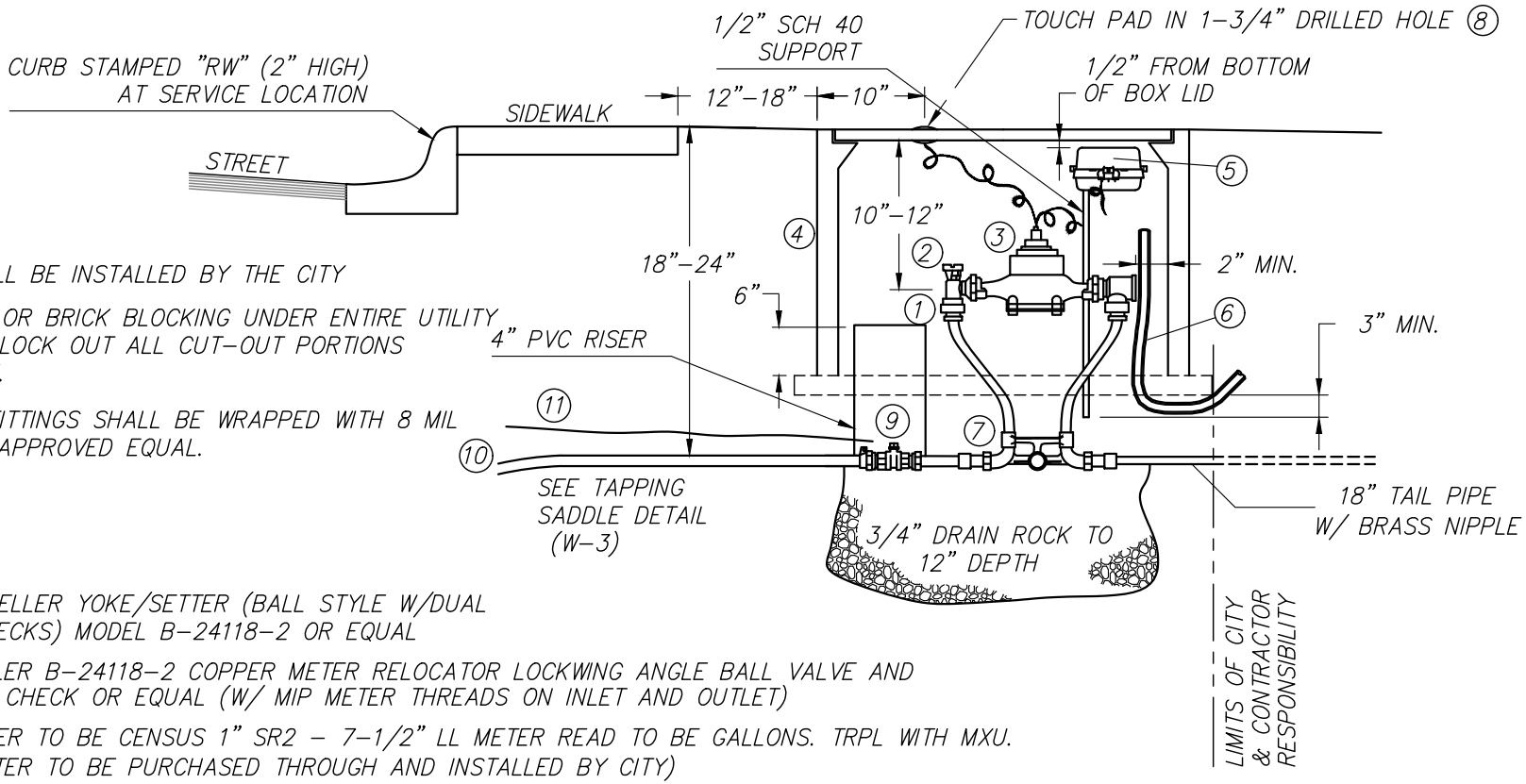

NOTES:

1. WATER METER SHALL BE INSTALLED BY THE CITY
2. INSTALL CONCRETE OR BRICK BLOCKING UNDER ENTIRE UTILITY BOX PERIMETER. BLOCK OUT ALL CUT–OUT PORTIONS OF THE METER BOX.
3. BURIED PIPE AND FITTINGS SHALL BE WRAPPED WITH 8 MIL POLYETHYLENE OR APPROVED EQUAL.

MATERIALS LIST:

(1) **METER SETTER** MUELLER YOKE/SETTER (BALL STYLE W/DUAL CHECKS) MODEL B–24118–2 OR EQUAL

(2) **ANGLE STOP** MUELLER B–24118–2 COPPER METER RELOCATOR LOCKWING ANGLE BALL VALVE AND DUAL CHECK OR EQUAL (W/ MIP METER THREADS ON INLET AND OUTLET)

(3) **WATER METER** METER TO BE CENSUS 1" SR2 – 7–1/2" LL METER READ TO BE GALLONS. TRPL WITH MXU. (METER TO BE PURCHASED THROUGH AND INSTALLED BY CITY)

(4) **METER BOX** CHRISTY MODEL B30 OR EQUAL (W/BOLT DOWN LIDS, READING LIDS, NO KNOCK OUTS) W/1–1" ROUND OPENING FOR (TOUCH PAD) IN COVER (CONTRACTOR RESPONSIBILITY)

(5) **REMOTE TRANSMITTER WITH SUPPORT** MXU AND TRPL TO BE PURCHASED THROUGH AND INSTALLED BY CITY

(6) **CONNECTION CONDUIT** 1/2" SCH 80 CONDUIT TO BE INSTALLED BY CONTRACTOR. TO CONNECT MULTIPLE METERS (SEE DETAIL W–5)

(7) **METER COUPLING** MUELLER H–10890 OR EQUAL (1" x 4" M.I.P. x SWIVEL NUT)

(8) **TOUCH PAD** PURCHASED BY DEVELOPER AND TO BE INSTALLED BY CITY

(9) **CURB STOP** MUELLER B–25166 BALL METER VALVE W/ LOCKWING OR EQUAL (INLET: COPPER FLARE AND OUTLET: F.I.P.) W/IN 4" PVC RISER

(10) **COPPER PIPE** TYPE K COPPER, ALL SERVICE TO 1" (FLARED FITTING)

(11) **RECYCLED WATER IDENTIFICATION TAPE:** TAPE SHALL BE IN ACCORDANCE WITH SECTION 10 OF THE CITY IMPROVEMENT STANDARDS.

NOTE:

PIPE AND METER SHALL BE WRAPPED AND MARKED IN ACCORDANCE WITH SECTION 10 OF THE CITY IMPROVEMENT STANDARDS.

CITY OF LINCOLN
ENGINEERING DEPARTMENT

RECYCLED WATER 1" OR 1-1/2" SERVICE LINE

REVISIONS:	DATES:	APPROVED:
		CITY ENGINEER DATE

SCALE: NONE
DATE: SEPTEMBER 2019
DRAWN BY: C.G.

RW-7

NOTES:

1. NO WATER IS TO BE DRAWN THROUGH THE BACKFLOW DEVICE UNTIL IT HAS BEEN TESTED BY THE CITY'S PUBLIC SERVICES.
2. CONTRACTOR SHALL LAY 3/4" DRAIN ROCK 12" DEEP UNDER METER SETTER.
3. CONTRACTOR SHALL INSTALL 1/2" CONDUITS 18" TO 24" DEEP.
4. WATER METERS SHALL BE PURCHASED THROUGH CITY. PURCAHSE INCLUDES INSTALLATION.
5. THE BACKFLOW DEVICE SHALL BE INSULATED WITH A CITY APPROVED FREEZE PROTECTION BAG.
6. INSTALL CONCRETE BLOCKING UNDER ENTIRE PERIMETER OF UTILITY BOX.
7. THERE SHALL BE NO FLOW ALTERING DEVICES 5x THE PIPE DIA. UPSTREAM AND DOWNSTREAM OF THE METER.
8. CURBSTOP SHALL BE BETWEEN 12" & 18" OF EASEMENT.
9. FITTINGS AND PIPING SHALL BE BRASS.
   BURIED PIPE & FITTINGS SHALL BE WRAPPED WITH 8 MIL. POLYETHYLENE APPROVED EQUAL.

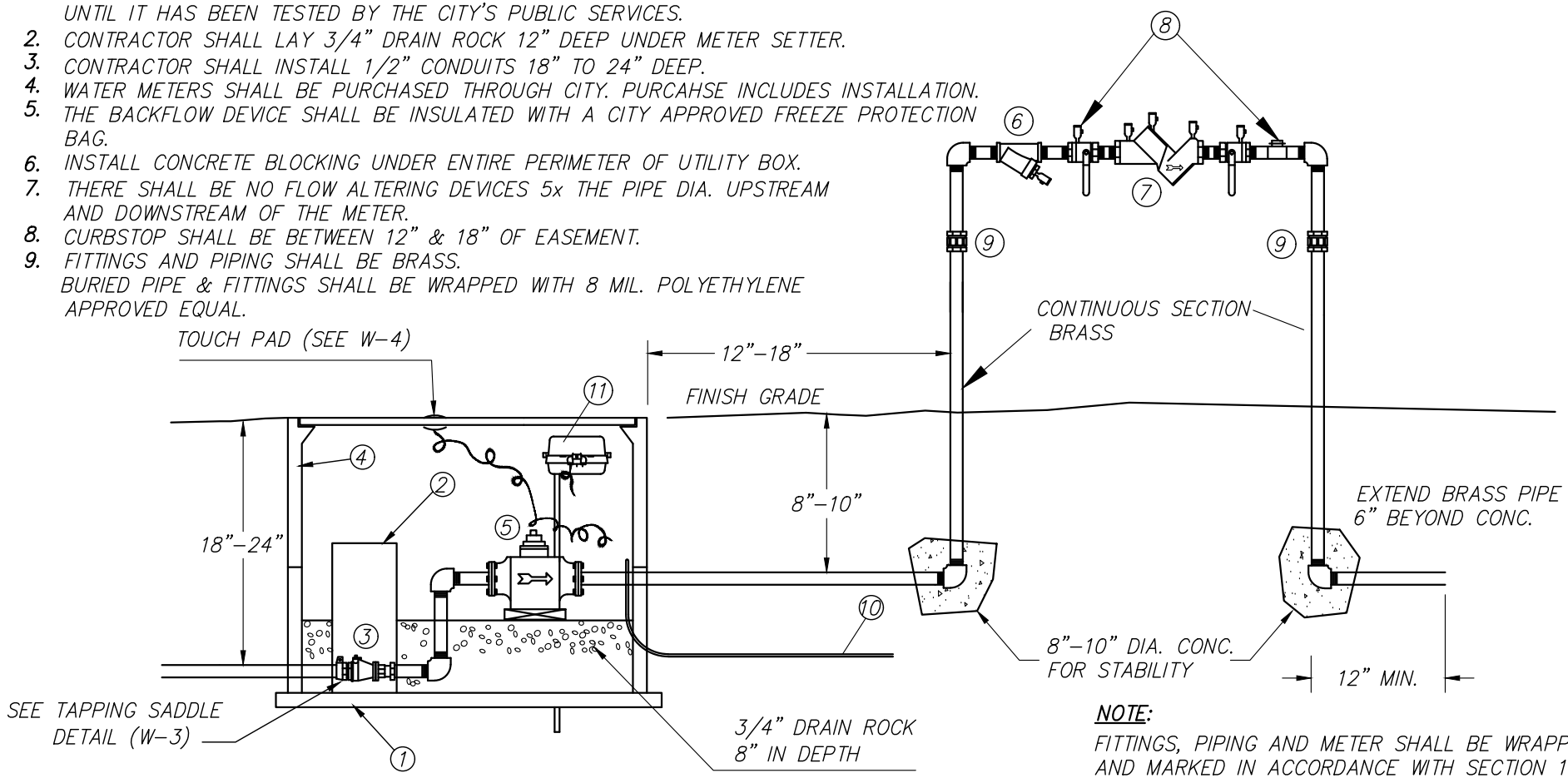

NOTE:

FITTINGS, PIPING AND METER SHALL BE WRAPPED AND MARKED IN ACCORDANCE WITH SECTION 10 OF THE CITY IMPROVEMENT STANDARDS.

MATERIALS:

1. CONCRETE BLOCKING
2. 6" CONTINUOUS RISER STOCK
3. CURB STOP
4. B40 UTILITY BOX WITH BOLT DOWN LID.
5. TURBO METER WITH STRAINER (PURCHASED THROUGH CITY)
6. "Y" STRAINER
7. R.P. TYPE BACKFLOW DEVICE
8. BALL VALVES
9. INSTALL (2) UNIONS
10. 1/2" CONDUIT TO OTHER MANIFOLD BOXES (OPTIONAL)
11. REMOTE TRANSMITTER (SEE DETAIL W-4)

CITY OF LINCOLN
ENGINEERING DEPARTMENT

RECYCLED WATER COMMERCIAL 1 1/2" & 2" IRRIGATION SERVICE

REVISIONS:	DATES:	APPROVED:
		CITY ENGINEER DATE

SCALE: NONE
DATE: SEPTEMBER 2019
DRAWN BY: C.G.

RW-8

NOTES:

1. NO WATER IS TO BE DRAWN THROUGH THE BACKFLOW DEVICE UNTIL IT HAS BEEN TESTED BY THE CITY'S PUBLIC SERVICES.
2. PIPE SHALL BE DUCTILE IRON. (FLANGED)
3. GATE VALVE SHALL BE RESILIENT SEAT.
4. SPOOLS UPSTEAM & DOWNSTREAM OF METER SHALL BE 5x THE PIPE DIAMETER.
5. INSTALL CONCRETE BLOCKING UNDER ENTIRE PERIMETER OF UTILITY BOX.
6. INSTALL 3/8" NON CASE HARDENED CHAIN W/LOCK BETWEEN VALVES.
7. CONTRACTOR SHALL SUPPLY CITY WITH 2 ROMAC GRIP RING CONFIGURATIONS FOR METER BYPASS AT TIME OF FINAL INSPECTION.
8. PIPE AND FITTINGS SHALL BE PURCHASED BY THE DEVELOPER.
9. THE BACKFLOW DEVICE SHALL BE INSULATED WITH A CITY APPROVED FREEZE PROTECTION BAG.

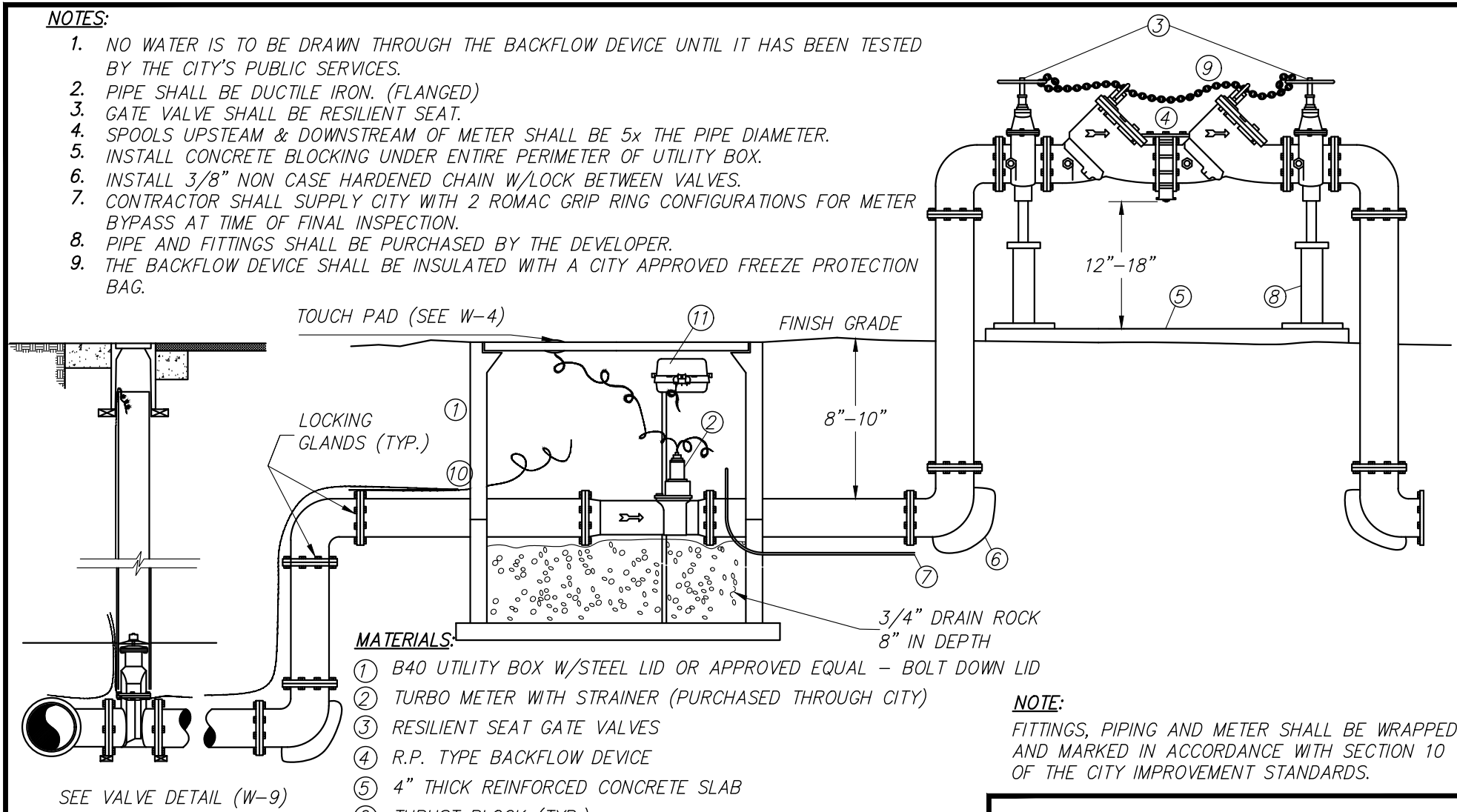

MATERIALS:

1. B40 UTILITY BOX W/STEEL LID OR APPROVED EQUAL - BOLT DOWN LID
2. TURBO METER WITH STRAINER (PURCHASED THROUGH CITY)
3. RESILIENT SEAT GATE VALVES
4. R.P. TYPE BACKFLOW DEVICE
5. 4" THICK REINFORCED CONCRETE SLAB
6. THRUST BLOCK (TYP.)
7. 1/2" CONDUIT TO OTHER MANIFOLD BOXES (OPTIONAL)
8. SUPPORT STANDS BOLTED INTO CONCRETE (TWO BOLTS MINIMUM)
9. 1/4" NON-CASE HARDENED CHAIN WITH LOCK
10. TRACING WIRE
11. REMOTE TRANSMITTER (SEE W-4)

NOTE:

FITTINGS, PIPING AND METER SHALL BE WRAPPED AND MARKED IN ACCORDANCE WITH SECTION 10 OF THE CITY IMPROVEMENT STANDARDS.

CITY OF LINCOLN
ENGINEERING DEPARTMENT

RECYCLED WATER COMMERCIAL 3" AND LARGER SERVICE

REVISIONS:	DATES:	APPROVED:
		CITY ENGINEER DATE

SCALE: NONE
DATE: SEPTEMBER 2019
DRAWN BY: C.G.

RW-9