SECTION 8

LANDSCAPING & IRRIGATION (LSC)

8-1 General LSC-1
8-2 Preservation of Property LSC-2
8-3 Personnel LSC-2
8-4 Weather LSC-2
8-5 Irrigation Installation LSC-2
A. Trenching LSC-2
B. Backfill LSC-3
C. Control Wiring LSC-3
D. Irrigation Controller LSC-4
E. Central Control Specifications LSC-4
1. Conduits LSC-4
2. Conductors LSC-4
3. Satellite Assembly LSC-5
F. PVC/Brass Pipe LSC-5
G. Sprinkler Heads LSC-6
H. Valves LSC-7
I. Valve Boxes LSC-7
J. Water Service and Meter LSC-7
8-6 Irrigation Testing LSC-7
A. Service Lines and Irrigation Main LSC-7
B. Leak Repair LSC-8
C. Electrical System LSC-8
8-7 Planting Installation LSC-8
A. Soil Preparation LSC-8
B. Soil Conditioning LSC-8
C. Fine Grading LSC-8
D. Tree, Shrub and Ground Cover Planting LSC-9
1. Locations LSC-9
2. Pit Digging LSC-9
3. Root Balls LSC-9
4. Planting plants LSC-9
5. Planting trees LSC-9
6. Fertilizers & Herbicides LSC-10
7. Supporting trees LSC-10
E. Seeding LSC-10
1. Preparation LSC-10
2. Application LSC-10
3. Protection LSC-10
F. Sod Planting LSC-10
1. Application LSC-10
2. Rolling LSC-11
3. Maintenance LSC-11
8-8 Irrigation Materials LSC-11
A. Approved Equal LSC-11
1. Product LSC-11

2. Contact LSC-11
3. Reference LSC-11
B. Unapproved Materials LSC-11
C. Backflow Prevention Device LSC-11
D. Electrical LSC-11
1. Control Wire LSC-11
2. Pull Box Covers LSC-12
3. Service Unit and Meter Socket LSC-12
4. PVC Conduit LSC-12
E. Irrigation Controller LSC-12
F. Pipes and Fittings LSC-13
1. Mains LSC-13
2. Service Laterals LSC-14
G. PVC Pipe Cements LSC-14
1. Primer LSC-14
2. Cement LSC-14
H. Sprinkler Heads LSC-14
I. Sprinkler Risers LSC-14
J. Valves and Valve Boxes LSC-14
1. Remote Control Valves LSC-14
2. Gate Valves LSC-15
3. Quick Coupling Valves LSC-15
4. Valve Boxes LSC-15
8-9 Planting Material LSC-15
A. Backfill LSC-15
B. Fertilizer LSC-15
1. Turf and Planting Areas LSC-15
2. Planting Holes LSC-15
C. Herbicide LSC-15
D. Imported Topsoil LSC-16
E. Mulch LSC-16
F. Plant Stock and Ground Cover LSC-16
G. Seed LSC-17
H. Soil Amendment LSC-17
I. Tree Stakes and Ties LSC-17
1. Tree Stakes LSC-17
2. Tree Ties LSC-17
3. Earth Anchors LSC-17
8-10 Maintenance Period LSC-18
A. Preliminary Inspection LSC-18
B. Maintenance Period LSC-18
C. Overall Maintenance Requirements LSC-18
D. Watering LSC-18
E. Lawn Maintenance LSC-18
F. Plants LSC-19
G. Weeding and Grading LSC-19
8-11 Cleaning Up LSC-19
8-12 Final Inspection and Acceptance LSC-19
A. Timing LSC-19
B. Review LSC-19
C. Corrective Work LSC-19

1. Turf LSC-19
2. Plants LSC-19
3. Irrigation LSC-19
D. Final Acceptance LSC-19
8-13 Guarantee LSC-20
A. Plants LSC-20
B. Irrigation LSC-20
8-14 Landscape and Irrigation Details LSC-21

[THIS PAGE INTENTIONALLY LEFT BLANK]

SECTION 8

LANDSCAPING & IRRIGATION (LSC)

8-1 **GENERAL -** All improvements within the City of Lincoln will be approved and permitted by the City, and will conform to the City of Lincoln Design Criteria & Procedures Manual. Landscaping and irrigation improvements will be installed as recommended by the material manufacturer and in strict accord with:

1. Approved project improvement plans
2. City of Lincoln Public Facilities Improvement Standards
3. CA Title 23, Division 2, Chapter 2.7, Model Water Efficient Landscape Ordinance
4. Caltrans Standard Specifications, latest edition

Should conflicts arise between documents, the approved project improvement plans will govern over these Public Facilities Improvement Standards. These Public Facilities Improvement Standards will govern over the Caltrans Standard Specifications. In the event of conflict between applicable documents and/or plans, the most restrictive will prevail. In the event that the requirements of this section conflicts with required storm water quality treatment, the storm water quality requirements will take precedence.

The manufacturer's guidelines for all materials to be used on the project will be present on the construction site at all times.

The Project will comply with all applicable City, County, State, and Federal laws and regulations relating to construction of the improvements as required, including the State of California Model Water Efficient Landscape Ordinance (MWELO).

If the City Engineer determines that any work on private or public property constitutes a hazard to the health, safety, or welfare of the public; endangers property; adversely affects the safety, use or stability of adjacent property; an overhead or underground utility, or a public way, watercourse or drainage channel; or could adversely affect the air quality; or the water quality of any water bodies or water courses; the City Engineer may issue a stop work notice to the owner of the property upon which the condition is located, or other person or agent in control of such property. Upon receipt of such stop work notice, the recipient will, within the period specified therein, stop all work, obtain any necessary permits and plans or other reports, detailed construction recommendations, studies, or other engineering data prior to and about any corrective or proposed work or activity.

All improvements within the City of Lincoln will be performed by a contractor licensed in accordance with the California Contractors State License Law, Business and Professions Code Section 7000 et seq.

All persons, firms, partnerships, or corporations doing business of any nature in the City of Lincoln will have a current Business License as stated in Chapter 5.04-License Tax, City of Lincoln Municipal Code. This includes developers, engineers, and contractors.

Refer to the City of Lincoln's Design Criteria & Procedures Manual for design information. All projects will follow the State water quality requirements for erosion and sedimentation control always.

8-2 **PRESERVATION OF PROPERTY -** The planting and irrigation operations will be conducted in such a manner that no damage will result to existing site improvements and plantings. The Contractor will be responsible for any damage resulting from these operations, and will repair or replace such damage at his own expense. Vehicles of any kind will not be allowed to pass over curbs, sidewalks, planting areas, etc., unless proper protection is provided.

8-3 **PERSONNEL -** Planting and seeding operations will be performed by a C-27 licensed contractor. Contractor will conduct planting and seeding operations under the supervision of a landscape technician that has been certified by the California Landscape Contractor Association.

8-4 **WEATHER -** No planting will occur during weather conditions which will adversely affect materials, or when soil is in a muddy condition.

8-5 **IRRIGATION INSTALLATION -** The plans indicate the general arrangement of piping and equipment, and do not necessarily indicate all offsets, fittings and accessories that may be required. The Contractor will furnish incidental materials and labor required to complete the work.

A. Trenching

1. Excavation will be open vertical construction sufficiently wide to provide free working space around the work to be installed and to provide ample space for backfilling and compacting. Trenches for pipe will be cut to required grade-lines, and the trench bottom will be compacted to provide an accurate grade and uniform bearing for the full length of the line. When two pipes are to be placed in the same trench, 6-inches of separation will be required between pipes and/or conduits. (Refer to the Public Facilities Improvement Standards Details LSC-6 and LSC-7)

2. The excavation required for the installation of conduit, foundations and other appurtenances will be performed in such a manner as to cause the least possible injury to the streets, sidewalks and other adjacent improvements. All landscape or other improvements disturbed in excavating will be replaced or reconstructed.

The material from the excavation will be placed in a position that will not cause damage or obstruction to vehicular and pedestrian traffic, nor interfere with surface drainage.

3. The minimum cover requirements above the conduit or wiring are:

a. 12- inches over non-pressure, lateral lines
b. 18- Inches over pressurized main lines.
c. 24- Inches over pipe crossing underneath pavement.

B. Backfill - Backfill material will consist of Class D requirements per these standards. Backfill will be free from lumps or stones and placed in 6-inch layers that are thoroughly compacted by mechanical tamping. Backfill will be compacted to 90% relative compaction outside of paving areas and 95% relative compaction within paving areas.

C. Control Wiring

1. Connections between the automatic controllers and the electric control valves will be made with direct burial copper wire AWG- U.F. 600 volt. Two spare wires of different colors will be run from the valve furthest from the controller, back to the controller. Pilot wires will be of a different color for each automatic controller.

2. The valve manufacturer's recommendations and wire chart. Wire size will be no less than #14.

3. Wiring will occupy the same trench as pressure supply or lateral lines. The wiring will be the same elevation as the supply or lateral lines, being neither above nor below these lines.

4. When more than one wire is placed in a trench, the wiring will be taped together at intervals of 4-feet to 6-feet.

5. Wires installed in conduits will not be taped together to facilitate replacement of individual wires.

6. An expansion curl should be provided within 3-feet of each wire connection and at least every 100-feet of wire length. Expansion curls will be formed by wrapping at least five tums of wire around a one-inch diameter pipe, then withdrawing the pipe.

7. Field splices between the automatic controller and electric control valves will not be allowed without the approval of the Director of Public Services or his/her designee.

8. There will be no twinned valves; all Remote Control Valves (RCV's) will be wired to an individual station on the controller.

D. **Irrigation Controller -** All controller locations are diagrammatic only. Placement of the controllers will be coordinated with the Director of Public Services or his/her designee. The controller will be a Rainmaster DX Series. Specific model to be approved by the Director of Public Services or his/her designee All local and applicable codes will apply in installing the 120-volt electrical service to the controller. The Contractor will provide the electrical service connections from the power service point to the controller. Adequate coverage and protection of the 24-volt service wire leading from the controller will be maintained from the bottom of the controller.

E. **Central Control Specifications -** The Contractor will coordinate with the telephone company for connections to the service and/or installation of conduits, telephone conductors, jacks and modems at the locations shown on the plans.

1. **Conduits -** Interconnect conduit and fittings will be PVC schedule 40. The interconnect conduit will be located within the public right-of-way whenever possible. If the conduit is installed outside of the public right-of-way, an easement will be provided to the City prior to installation.

   Conduit runs will be installed as shown in the approved plans. Any changes will be approved by the City Engineer prior to installation.

   The ends of the conduits, whether shop or field cut, will be reamed to remove burrs and rough edges. Cuts will be made square and true.

   Conduit bends, except factory bends, will have radii of not less than six times the inside diameter of the conduit.

   Conduit will be installed at a depth of not less than 18-inches below finished grade.

   Conduit will be free of soil and debris.

   A nylon or polypropylene pull rope with a minimum tensile strength of 500- pounds will be installed in all conduits, which are to receive future, interconnect cable. At least 2-feet of pull rope will be extended beyond each end of the conduit run and secured.

2. **Conductors -** The communication cable as required from the sub master satellite assembly to the other satellite assemblies on line will be a 4-conductor shielded cable.

   Communication cable may be used to link satellites up to 5,000-feet from each other.

   The flow sensor wire as required from the flow sensor into the satellite assembly enclosure will be a 2-conductor shielded cable.

The sensor cable may be used to connect the flow sensor to a satellite up to 2,000-feet from each other.

All interconnect conductors will be pulled by hand. A total of 3- feet of cable will be left at each satellite assembly and pull box. Sufficient slack will be left to allow the wire to extend 18- inches above the top of the pull box grade.

The interconnect wire will be continuous from satellite to satellite. All splices will occur within the satellite enclosure unless specifically authorized by the Director of Public Services or his/her designee. Splices will be capable of satisfactory operation under continuous submersion in the water.

3. **Satellite Assembly -** All satellites will be pre-assembled by the supplier in a stainless steel, weather proof, and vandal resistant, lockable enclosure. The satellite assembly will consists of a removable backboard, interconnect terminal strips, primary power voltage surge arrester, on/off switch, a ground fault interrupt circuit, ground rod, wire, and clamp.

   The satellite assembly will include a phone communication circuit board for communicating with the central computer by means of the telephone system.

   The satellite assembly will include a radio communication circuit board for communicating with the central computer by means of data radio.

   The satellite assembly will include a hard wire communication circuit board for communicating with a sub master satellite assembly when interconnected by means of hard wire.

   The satellite assembly will include a radio and dome antenna assembly for line of sight communication or a radio and high gain antennae assembly for non-line of sight.

   The satellite assembly (where applicable will include a flow sensing assembly with normally open master valve assembly option for each point of connection (maximum of two per satellite/group) or a Dual Flow Sensing Assembly with Master Valves option for a single point of connection with a bypass to monitor very low and high flows.

   The satellite assembly (where applicable) will include a transmitter and built-in remote receiver with a controller access code built-in receiver only with controller access code whichever is applicable.

   The satellite assembly will be covered by a five-year limited warranty.

F. PVC/Brass Pipe

1. PVC pipe will be cut with a fine-toothed hacksaw or approved cutting tool and any burrs will be removed. The outside of the pipe and the inside surface of the fittings

will be wiped with a clean cloth and then primed to remove all dirt and moisture prior to applying cement solutions.

2. The cement solution will be applied to the pipe and fitting socket with a brush having a width approximately one-half the diameter of the pipe. The cement solution will be applied freely with a light wiping action to spread the cement uniformly over the surfaces. The pipe surface or fitting socket will not be rubbed with a brush any more than is necessary to spread the cement.

3. Immediately after the cement has been applied to the surface to be joined, the pipe will be inserted into the fitting with a twisting motion to the full depth of the fitting socket. Immediately after joining is completed, excess cement will be thoroughly wiped form the pipe and fitting. The joined members will be allowed to cure for at least 5-minutes before they are handled. In cold or damp weather, the curing period will be increased due to slower evaporation of the solvent. An additional fitting or pipe section may be added to the completed joint within 3-minutes if care is exercised in handling so that a strain is not placed on the previous joint.

4. Except as shown on the approved plans, PVC pipe will be laid in a level trench on compacted or undisturbed earth and solvent-weld pipe will be placed from side to side in the trench at intervals of approximately 50-feet. Pipe will be held down between joints with small mounds of earth to prevent movement.

5. Pressure test of mainline will be made with all RCV's installed and under pressure. After completion of pressure tests on the pipelines, the trench will be immediately backfilled, covering the pipe with soft earth to prevent damage from rocks.

6. Brass pipe joints will be threaded couplings, rated at 150-psi. Threaded joints will be made by placing Teflon tape on the male threads only. Use of thread cement or caulking to make the joints tight is not permitted. All cut ends will be reamed to full pipe bore before assembly. Brass pipe fittings will be joined to the pipe in the same manner as specified for pipe joints.

7. All main lines to have a jacketed copper trace wire installed, running the entire length of the main.

8. All taps on main lines 3-inches or larger will be made with saddle taps.

9. All piping will be sleeved under paving.

G. **Sprinkler Heads -** Nozzles on stationary sprinklers will be tightened after installation and sprinklers having an adjustment stem will be adjusted on a lateral line for proper radius, diameter and gallon. They will be set perpendicular to finished grade and will be installed as indicated on the approved plans and as shown in these Improvement Standard Details.

A coverage test shall be performed in the presence of the City Inspector after the Contractor has made all adjustments to the irrigation system. No hydroseeding or planting shall occur until the City Inspector has determined the water coverage for planting areas is complete and adequate.

H. Valves - Remote control valves will be adjusted so the most remote sprinkler heads operate at the pressure recommended by the head manufacturer and so a uniform distribution of water is applied by the sprinkler heads to the planting areas for each individual valve system. Each valve assembly will have its own outlet; multiple assemblies are not allowed. All valves will be installed as indicated on the approved plans and as shown in these Improvement Standard Details.

I. Valve Boxes

1. All remote-control valves, gate valves, manual angle or globe valves will be installed in a plastic valve box as shown in the Construction Standard Details, complete with cover, unless otherwise specified on the approved plans. All plastic valve boxes will be Brooks, Ametek, Carson, each with locking lids, or approved equal.

2. All valve boxes will be set ¼-inch above finish grade in lawn areas and 2-inches above finish grade in ground cover areas. Valve boxes in athletic field areas will be set 12-inches below grade with a 3M Marking Ball, or approved equal.

3. Valve boxes located near walks, curbs, header boards or paving will be installed in such a way as to allow for valve boxes to abut those items with top surface matching planes.

4. All valve boxes will be blocked for support with brick or concrete block.

5. Valve boxes will be heat branded with 2” characters.

J. Water Service and Meter - The water service and meter will be installed in accordance with Improvement Standard Details.

8-6 IRRIGATION TESTING

A. Service Lines and Irrigation Main - Upon completion of the main line distribution system, lateral lines and installation of the electric control valves, the system will be flushed and then capped. After notifying the City Engineer 72-hours in advance, the system will be pressure tested by applying a continuous static water pressure and will meet the these conditions:

1. Main lines to hold 150-psi for four hours.

2. Lateral lines to hold line pressure for four hours.

B. Leak Repair - Repair any leaks resulting from the pressure tests. Pressure testing will continue until no leakage or loss of pressure is shown over the entire prescribed test period. At the conclusion of the pressure tests, the heads will be installed and tested for operation in accordance with design requirements under normal operating pressures.

C. Electrical System - Prior to the acceptance of the improvements, the Contractor will pass the following tests to the electrical system:

1. Continuity of each circuit
2. Grounds in each circuit
3. A megger test on each circuit
4. A functional test in which it is demonstrated that each and every part of the system functions as specified or intended herein.

8-7 PLANTING INSTALLATION

A. Soil Preparation - Prior to any planting bed preparation or planting, finish grade all planting areas, fill as needed or remove surplus dirt and float areas to a smooth, uniform grade as indicated on the approved Grading Plans. Slope all planting areas to drain. Roll, scarify, rake and level as necessary to obtain true, even planting surfaces. Finish grades will be approved by the Public Services Director or his/her designee before planting is started. All planting areas will be thoroughly wet down and sprinkler emitter coverage and operation confirmed. Allow soils to dry so as to be workable after which, thoroughly cultivate to a depth of 12-inches and allow to dry out.

B. Soil Conditioning - Soil amendment and fertilizers will be spread evenly over all areas as specified below:

1. Fertilizer - Per soils fertility analysis.

2. Soil Amendment- Per soils fertility analysis. Soil amendments and fertilizers are to be incorporated into the top 12-inches of soil by repeated rotary-hoe cultivation.

C. Fine Grading

1. Grades will require uniform levels or slopes between points where elevations are given, or between established walks, curbs, paving or other fixed structural elements. Planting areas, including lawns, will be true to grade within one inch tested in any direction with a 10-foot straightedge. Finish grades will be smooth, even plane with no abrupt change of surface. Tops and toes of slopes will be rounded to produce gradual transitions.

2. Finished grades of all shrubs, annuals and ground cover areas will be 1-inch below top of adjacent structural elements.

Subgrades of lawn areas will be ½-inch below top of adjacent structural elements. All grades to provide for gravity, surface runoff of water. Low pockets are not allowed.

D. Tree, Shrub and Ground Cover Planting

1. **Locations -**Tree and shrub locations are to be marked on-site using survey stakes, paint marks, or other approved methods. Locations will be approved by the Director of Public Services or his/her designee prior to plant holes being dug. In addition, special consideration shall be given to street tree locations at intersections, as follows:
    i. No street trees within 25 ft of street lights on arterial, collector or commercial streets.
    ii. No street trees within 15 ft of street name, stop or yield signs at curb returns and intersections on residential streets.
    iii. Distance shall be measured from center of trunk to center of sign post or street light pole.

2. **Pit Digging -** Dig circular pits, 3 times the diameter of the planting can.

3. **Root Balls -** Plants are to be lifted so that the root ball is supported from the underside. Plants that do not have a satisfactory root system will be rejected. If plants do not have young feeder roots showing at the edge of the container, loosen their roots and cut in several places to encourage new feeder root development along the perimeter of the root ball. Root balls are to be checked for girdling roots around the stems.

4. **Planting plants -** All plants will be planted immediately after the containers are cut and containers will be immediately removed from the site. Ground cover will be installed at spacing's indicated on the approved plans and will be evenly spaced and staggered in rows. Place each plant in a pit so the root system lies free without doubling and so the roots are planted vertically. Firm the soil around each plant and sprinkle the area immediately to avoid drying out.

5. **Planting trees -** Place plants in the pits in an upright position and place approved fertilizer tablets. Backfill until the hole is one-half full, thoroughly water, then complete backfilling. Place a 4-inch high berm outside the excavated area, and fill the watering basin with water. Trees will be planted on a packed mound, 2-inches above grade at the time of planting. The crown on the plant after settlement will be 1-inch above finish grades for shrubs and 3-inches above finished grades for trees. Basins are not required if plants are in a lawn area or are watered by an emitter system. Mulch is not to be placed within the basin areas, or within 6- inches of the stems for areas without basins.

6. **Fertilizers & Herbicides -** Apply fertilizer consisting of a mixture of 16% nitrogen, 6% phosphorous, 8% potassium (16-6-8) at a rate of 5-pounds per 1,000-square feet uniformly over area to receive ground cover. Pre-emergent herbicide will be applied to all shrub and ground cover areas, including plant basins, prior to any required mulching.

7. **Supporting trees -** After pruning (only suckers are to be pruned, no pruning on-stem of the tree, up to the primary branches) place stakes along the side of the root ball and two feet into undisturbed soil. Trees are to be tied to the stakes per Improvement Standard Details. No mulch is to be placed within the tree basin, or within 6- inches of the stem if a basin is not required. Specimen trees will be guyed as specified in Improvement Standard Details. Specimen trees planted in parks or areas subject to pedestrian traffic will receive a 24-inch long by ½-inch diameter white PVC pipe on each guy wire for visibility.

E. Seeding

1. **Preparation -** Installation of all plants and ground cover will have been completed prior to seeding operations. Just prior to sowing, areas to be seeded will be made sufficiently loose and friable to receive the seed.

2. **Application -** Seed will be sowed evenly using a mechanical spreader at the rate specified on the approved plans. One-half the seed will be sowed in one direction, and the remaining one-half sowed in a direction 90-degrees to the first during a windless period. Turf seed will be applied with an implant seeder that implants the seed into the soil. Broadcast seeding is not allowed for turf seed. Apply fertilizer (16-6-8) at a rate of 5-pounds per 1,000-square feet uniformly over seeded areas. Lightly rake surface to cover seed and to mix with fertilizer and then compact with a 200- pound roller. Soil will be kept moist but not saturated until the seed has generated.

3. **Protection -** Protect grass areas with temporary fencing as necessary. Barriers will be maintained by the Contractor and kept in orderly condition at all times until work has been accepted by the City. Any damage to turf will be repaired at the expense of the Contractor.

F. Sod Planting – Contractor will notify the City Engineer and the Director of Public Services at minimum, 10 days prior to placement. The City reserves the right to inspect and approve the sod, prior to installation.

1. **Application -** Unroll the sod, fitting each strip tightly to the preceding strip. Do not stretch the sod. Force each strip together as tightly as possible. Stagger the strips of sod to prevent the seams on adjacent rows from matching. Care will be taken to prevent heel or foot prints in the grade as the sod is being placed.

2. **Rolling -** As soon as the sod is placed, roll it with a light roller, making certain that no air space is left under the sod. After the first rolling, moisten the sod lightly and then allow the grass to dry off before the second rolling. The second rolling should be at a cross angle to the first rolling.

3. **Maintenance -** Upon completion of the installation, the Contractor will maintain the sod per manufacturers specifications and as approved by the Public Services Director and his/her designee.

8-8 **IRRIGATION MATERIALS -** Materials used in irrigation water systems will conform to these Improvement Standards:

A. **Approved Equal -** The words "approved equal" will mean any material deemed by the City to be acceptable for use within the City's water system as compared to products of specified manufacturers. Specifications for all materials (submittals) to be used on the project will be submitted to the City prior to start of construction. The submittal will include a letter with:

1. **Product -** A description of the product and the appropriate materials specification section number.

2. **Contact -** The name and telephone number of the contact person for the proposed product.

3. **Reference -** A list of other agencies that are using the proposed product (including names and telephone numbers).

Address the letter to the City Engineer. City staff may request a sample of the product for review. The Contractor will submit all material for review 35-days prior to contract award. All submittals will include documentation verifying contract award date. Contractors will allow 2 to 4 weeks review time by the City.

B. **Unapproved Materials -** Materials not approved for use on the project will be removed from the site within 24-hours if requested by the City Engineer and/or Director of Public Services and their designees.

C. **Backflow Prevention Device -** The backflow prevention device will be of a reduced pressure type and will be in accordance with these Public Facilities Improvement Standards.

D. **Electrical**

1. **Control Wire-** All wiring to be used for connecting the automatic controller to the electric solenoid actuated remote control valve will be type UF-600V, solid copper, PVC insulation, single conductor, UL approved underground feeder cable. All pilot or "hot" splicing wire at the valves or in the field will be made as follows: The splice

will be insulated with a 3M DBR #09053 Splice Kit, or approved equal. Field splices between the controllers and valves will not be allowed without prior approval of the City Engineer.

2. **Pull Box Covers -** Pull boxes will have reinforced concrete covers and will be inscribed "Irrigation 24 Volt". Covers will be provided with two 3/8-inch brass hold down bolts with brass washers and nuts. Nuts will be recessed below the surface of the cover. Pull boxes set in traffic areas will have steel covers designed to handle vehicle loading. Pull box covers will be heat branded “Pull Box” in 2-inch lettering.

3. **Service Unit and Meter Socket -** The combination service and termination point for metered service will be Tesco Class 21-000 service pedestal State of California Type 3, or approved equal.

4. **PVC Conduit-** All PVC conduit will be heavy-wall, schedule 40, with factory made bends, couplings and fittings.

E. **Irrigation Controller -** The irrigation system controller will be a Rainmaster DX Series. It will be housed in an exterior (16 gauge) weatherproof pedestal mounted lodging case. It will operate on 117 volts AC, 50/60 Hz power input and be capable of operating 24-volt AC electric control valves. In addition, the controller will be equipped with or will be capable of the following:

1. Each station will have the capability of being individually programmed to operate from one minute to nine hours, and from 59-minutes in one-minute intervals.

2. It will have a quick stations function that allows for rapid programming of a block of stations with the same watering period.

3. It will have three independent programs with four automatic starts per day per program.

4. Each program will have its own percentage function which allows the watering length of all stations in the program to be changed from 0% to 300% in 1% increments and always can display the original watering length of each station.

5. Each program will be capable of being set on either a seven-day weekly repeat cycle where the active days are displayed all at once or on a skip day basis where the user may select the number of days skipped, from one to thirty, between watering’s with the starting day selectable.

6. The controller will have a review program function, which, with one button, will sequentially bring all its programming information to the displays at a readable rate. The recall display will be interruptible at any time for changing of the program. Each program will provide a total duration watering time in hours and minutes.

7. The controller will allow for setting in a "rain mode" for up to seven days, after which it will revert to the "automatic mode".

8. Program may be protected by use of an access code.

9. Controller will be capable of being operated manually at any time without affecting the original program.

10. The controller will have a rechargeable battery back up to maintain time and the user's program.

11. The controller will have the capability of responding to external remote control signals when coupled to a master remote control system.

12. The controller will have a built-in self-test which allows the user to check each of the following:

    a. LED's for lighting and shorts

    b. The digital display for lighting and shorts

    c. Each key of the keyboard for integrity and proper function

    d. All stations capable of being operated manually at any valve

13. Output power capacity will be 24-VAC, 1-amp maximum, equivalent to 24-VA.

14. When the battery-operated controller is used, a PT2 NiCd rechargeable battery pack will be used.

    The controller will be housed in a pedestal type enclosure installed on a Class A Portland Cement Concrete foundation as recommended by the manufacturer of the controller. Enclosure will be a weatherproof, 16-gauge zinc coated metal locking case to which 2 keys will be provided. Enclosure will be grounded with a minimum 6-foot copper clad ground rod. The enclosure and accessories will be installed in conformance with the manufacturer's instructions and recommendations. Foundation to be a minimum of 4-inches deep and with sufficient width to prevent tipping.

F. Pipes and Fittings

1. **Mains -** Irrigation mains will be 3/4-inch or larger polyvinyl chloride pipe (PVC) Class 315 and will be manufactured of Type 1, Grade I or II, 2,000-psi design stress compound designated as PVC 1120 or 1220, and will conform to ASTM designation D1784 for rigid PVC compounds. All main lines of 3-inches or larger will be ring title. All plastic fittings will be molded Schedule 40 fittings manufactured

of the same material as the pipe and will be suitable for either solvent weld or threaded connections. Solvent weld type couplings and fittings will have a pressure rating equal to or greater than that of the pipe and will be a type recommended by the pipe manufacturer.

2. **Service Laterals -** Laterals will be ½-inch or larger PVC Class 200 and will be manufactured of Type 1, Grade I or II, 2,000-psi design stress compound designated as PVC 1120 and will conform to ASTM designation D1784 for rigid PVC compounds. All plastic fittings will be molded fittings manufactured of the same material as the pipe and will be suitable for either solvent weld or threaded connections. Solvent weld type couplings and fittings will have a pressure rating equal to or greater than that of the pipe and will be a type recommended by the pipe manufacturer. Brass pipe fittings will be 150-psi, banded pattern. All nipples will be of the same material as the pipe.

G. PVC Pipe Cements

1. **Primer-** For all sizes of PVC pipe and fittings, primer will be IPS P-70 PVC, Weld On #P-70 Primer, or approved equal.

2. **Cement-** For all sizes of PVC pipe and fittings, cement will be IPS 711, Weld on #711 Glue, or approved equal.

H. Sprinkler Heads - All sprinkler heads will be constructed of plastic or stainless steel and will be matched precipitation rate (MPR) nozzles equipped with a Seam-A-Matic (SAM) check valve or approved equal.

All sprinkler heads of a particular type or function in the system will be of the same manufacturer and will be marked with the manufacturer's name and identification in such a position that they can be identified without being removed from the system. All tree bubblers will be placed below grade in perforated pipe with crushed rock and geotextile fabric.

I. Sprinkler Risers - All ½-inch riser nipples will be threaded Schedule 80 PVC and swing joints will be Schedule 80 PVC threaded street ells. All 1-inch riser assemblies will consist of swing joints rated at 200 psi, 2-Schedule 80 PVC nipples and 1-Schedule 80 nipples.

J. Valves and Valve Boxes

1. **Remote Control Valves-** All Remote-Control Valves (RCV) will be 24-volts, 3.5-watt maximum, normally closed, spring-loaded and diaphragm actuated. They should have a mechanical self-cleaning internal control system. The RCV will be slow closing with no adjustments or settings required. A manual flow stem or throttle or close will be provided. Each RCV will be equipped with a petcock. The solenoid is to be corrosion proof and molded in epoxy resin to form one integral

unit. The RCV will have two inlet tapping's (furnished with one plugged) and capable of being installed as either a globe or angle valve. It must have a removable seat and be completely serviceable in the field without removing the valve body from the system. All RCV are to be isolated from the main line with a PVC Ball Valve and connected to the lateral with a schedule 80 union/fitting in the valve box. RCV used in drip irrigation systems will incorporate an adjustable pressure regulator with a regulating range of 5 to 200- psi. The RCV will be an electric solenoid type, and will be the Hydro-Rain Series 100 or approved equal.

2. **Gate Valves-** Gate valves will be bronze body, bronze mounted, double disc, parallel seat with non-rising stem. Gate valves will have "O" ring seals and have hubs suitable for use with the main distribution pipe furnished for the sprinkler system. See Standard Detail LSC-11.

3. **Quick Coupling Valves -** Quick coupling valves will be two- piece, 1-inch diameter Rain Bird 44RC with a coupler key, Rain Bird 44K single lug or approved equal. See Standard Detail LSC-12.

4. **Valve Boxes -** Valve boxes will be plastic with lock snap cover, green, with the word "Irrigation" embossed on the cover. Valve boxes will be Brooks or approved equal. Valve boxes installed below the finish grades will also include a 3M Marking Ball, or approved equal.

8-9 PLANTING MATERIAL

A. **Backfill -** Backfill used in tree and shrub holes will be a mixture of soil amendment (one-third) and excavated material (two-thirds), thoroughly mixed.

B. **Fertilizer -** Fertilizer will be a commercial inorganic fertilizer in the granular or pellet form. Fertilizer will be delivered to the site in containers labeled in accordance with the applicable State of California regulations, bearing the warranty of the producer for the grade furnished, and will be uniform in composition, dry and free flowing.

   1. **Turf and Planting Areas -** Pelleted types with analysis of 16-6-8.

   2. **Planting Holes -** Tablet types with an analysis of 20-10-5, Agriform Blue-Chip Tablets, 21- gram size, or approved equal.

C. **Herbicide -** A list of approved products includes: Surflan, Ronstar G, Ronstar WSP, or approved equal.

D. **Imported Topsoil -** Topsoil will be an imported fertile, friable soil of loamy character containing a normal amount of organic matter. It will be obtained from well-drained, arable land and will be free from refuse, roots, heavy or stiff clay and stones larger than 1-inch in size. Soil will be lab tested, containing the following percentages: Sand-between 45% and 52%; Silt-between 26 and 50%; Clay-between 6 and 26%. Sands will range from 2 to 0.05 millimeters in diameter; Silt from 0.05 to 0.002- millimeters in diameter; and Clay less than 0.002 millimeters in diameter.

E. **Mulch -** Mulch will be a fibrous, woody bark mixture. A list of approved products includes: CedarSafe Certified Playground Engineered Wood Fiber or Sierra Brown Decorative Mulch from Applied Landscape Materials, Inc.

F. **Plant Stock and Ground Cover -** Plants will be the variety, quantity and size indicated on the approved plans. Quality and size will conform to the State of California Grading Code of Nursery Stock, No. 1 grade. Nursery grown stock only will be used and will be free from insect pests and diseases.

All plants will comply with Federal and State laws requiring inspection for plant diseases and infestations. Inspection certificates required by law will accompany each shipment of plants, and certificates will be delivered to the Director of Public Services or his/her designee. All plants will be true to specified and size indicated, and will be tagged in accordance with State of California Grading Code of Nursery Stock; however, determination of plant species or variety will be made by the Director of Public Services or his/her designee and will be final.

Plants will be healthy, shapely and well rooted, and roots will show no evidence of having been root bound, restricted or deformed. Root conditions of plants in containers will be inspected by the Director of Public Works/City Engineer and determined by removal of earth from the roots of not less than two plants of each specified or variety from each source. In case the sample plants inspected are found to be defective, the Inspector reserves the right to reject the entire lot or lots of plants represented by the defective samples. All plants rendered unsuitable for planting because of this inspection will be immediately removed from the site.

Each plant will be handled and packed in the approved manner for that species or variety and all necessary precautions will be taken to ensure that the plants will arrive at the site of the work in the proper condition for successful growth without scarred or broken branches. Trucks used for transporting plants will be equipped with covers to protect plants from windburn.

Substitutions will not be permitted unless proof is submitted to the City Engineer that any plant specified is not obtainable. The Inspector will consider use of the nearest equivalent size or variety.

Plants will have straight trunks with the leader intact, undamaged and uncut. Trees will be well tapered in the trunk so that they will stand alone without the support of the nursery stake. Branching on the main leader will be in alternate locations and well-spaced apart with no severe crossing of branches. All old abrasions and cuts will be completely calloused over. All plants will be measured when their branches are in their normal positions. Height and spread dimensions indicated refer to the main body of the plant and not from branch or root tip to tip. Indicated sizes shown are before pruning. Plants will be pruned prior to delivery except upon approval of the City Engineer. Ground cover will be rooted plants, grown in flats unless otherwise approved by the Inspector.

G. **Seed -** Seed mixture will be 98% pure, and noxious weed free, with a minimum of 88% Germination. Seed variety or mix will be as specified on the plans and approved by the City Engineer. All seed will be cleaned Grade A "new crop" seed, delivered in the original unopened containers, and will bear a guaranteed analysis and dealer's label. The dealer may mix the seed provided a guaranteed statement or composition of mixture and percentages of purity and germination of each variety is attached to the sealed container. The seed will be pre-treated with a pre-emergence fungus preventative in accordance with the manufacturer's specifications. The seed containers will be stored immediately in a dry, weather and damp proof structure. Any seed, which has become wet, moldy or is otherwise damaged in transit or storage, will not be acceptable. Supplier & seed mixture will be approved by the Director of Public Services or his/her designee prior to delivery.

H. **Soil Amendment –** Soil Amendments will be determined by a recommendation by the Project Landscape Architect. Any soil amendment recommendations shall be reviewed and approved by the Director of Public Services or his/her designee. Soil amendment will be delivered to the job site bearing the warranty of the producer for the grade furnished and will be uniform in composition and free flowing. Grade will be 0 to ¼- inches with 15% maximum proportion of ¼- inch particles.

I. **Tree Stakes and Ties**

1. **Tree Stakes -** Tree stakes will be straight, close grained hardwood, and pointed at one end. Stakes will be pointed prior to treatment with copper naphthalene, which will penetrate stake surfaces to a minimum depth of ¼- inch. Tree stakes will consist of 2-inch diameter by 10-foot long, round stakes.

2. **Tree Ties -** A list of approved products includes: Rubber cinch type or approved equal.

3. **Earth Anchors -** The size of trees to be supported will determine the necessary holding capacity of these anchors. Anchor holding capacity to be approved by the Director of Public Services or his/her designee. A list of approved products includes: Duckbill®, or approved equal.

8-10 MAINTENANCE PERIOD

A. Preliminary Inspection - Upon completion of all irrigation and planting work, the Contractor will notify in writing the City that the landscaping is ready for preliminary inspection. The approval of the completed work will establish the beginning of the maintenance period. No partial approvals will be given.

B. Maintenance Period - The maintenance period will be 90-calendar days from the approval of the constructed improvements. A longer period may be required to establish acceptable stands of thriving plants.

C. Overall Maintenance Requirements - Maintenance will include all watering, weeding, mowing, fertilizing, cultivation, spraying and pruning necessary to keep the plant material in a healthy, growing condition and to keep the planted areas neat and attractive throughout the maintenance period. Maintenance will also include responsibility for maintaining adequate protection for all landscaped areas. Any damaged areas will be repaired at no additional expense to the City.

During the maintenance period, should the appearance of any plant indicate weakness and the probability of dying (in the opinion of the Director of Public Services or his/her designee) that plant will be replaced immediately by the Contractor at his own expense. Replacements will be made in the same manner as specified for the original planting. At the end of the maintenance period, all plant material will be in a healthy, growing condition and free of physical injury of any kind.

Maintenance includes all items constructed under the approved plans. All items will be maintained in an optimum working condition. The site will be kept free of debris, including emptying trash containers, by means of a general clean up twice a week.

D. Watering - All plants will be watered not less than twice a week. Each watering will be of such quantity as to provide optimum growth conditions. The Contractor will provide the equipment and means for its proper application.

E. Lawn Maintenance - Lawn areas which fail to germinate will be re-seeded at maximum 10-day intervals until a vigorous, uniform stand of turf is established. Lawn areas will be kept free of weeds, by hand pulling, or they may be sprayed with an approved selective chemical herbicide before the weeds exceed 2-inches in height.

Lawns will be mowed for the first time after establishment of a vigorous, uniform stand of turf has reached 3-inches. Lawns will be trimmed at the edges of curbs, walks, paving and other surface improvements. Clippings and debris will be removed from the site. Lawn will be mowed a second time when it again reaches a 3-inch height, except that the second cutting will be performed no sooner than 10-days after the first. Mowing will then take place at maximum 1-week intervals until final acceptance. After the second mowing, apply the second application of fertilizer per manufacturer's specifications.

F. **Plants -** Plants installed will be properly maintained by regular watering, cultivating, weeding, re-mulching, repair of stakes, pruning, and treatment of insects and pests. Any plants which are vandalized, diseased, dead or in an unhealthy condition will be replaced by the Contractor at his own expense within two weeks after notification from the City Inspector. Any lawn or plants damaged by herbicide will be replaced by the Contractor at his own expense. Maintenance will also include treatment or replacement due to fungus, diseases, rodents and insects.

G. **Weeding and Grading -** All areas to be weeded at intervals of not more than 10-days. Rocks, clods and debris that appear on the surface will be removed. Heaved, settled or eroded areas will be restored by excavating, filling, finish grading, rolling and re-seeding as required.

8-11 **CLEANING UP -** The Contractor will always keep the premises free from accumulations of waste, material or rubbish caused by his employees, or employees of the subcontractors, and at the completion of his work, will remove all rubbish from and about the site and all tools, scaffolding and/or surplus materials.

8-12 FINAL INSPECTION AND ACCEPTANCE

A. **Timing -** Final inspection will be conducted at the end of the maintenance period. Notice requesting the final inspection will be submitted in writing by the Contractor to the Director of Public Services or his/her designee at least 7 days prior to the anticipated date.

B. **Review -** Acceptance of the project by the City will be contingent upon proper maintenance and the establishment of a vigorous, uniform stand of turf, healthy plants, weeded site, repair of any damaged surface improvements, repair of any damaged irrigation components and a thorough cleaning of the site. Just prior to final inspection, Contractor will apply fertilizer per manufacturers specification.

Fertilizer will be spread around plant bases and thoroughly watered.

C. **Corrective Work**

1. **Turf -** Any portion of turf which does not show a vigorous, uniform stand will be replaced and will make all lawn areas subject to continued maintenance at the Contractor's expense.

2. **Plants -** Plants which are missing, vandalized, dead or unhealthy, will be replaced by the Contractor at his expense with the same species and sizes as specified on the approved plans. The Contractor will make replacements within two weeks after final inspection and maintain the plants for additional 30- days.

3. **Irrigation -** The irrigation system will be repaired to conform to the requirements of the approved plans and associated specifications.

D. **Final Acceptance -** If project improvements, corrective work and maintenance have not been performed as specified to the satisfaction of the Director of Public Services or his/her designee, maintenance will continue at the Contractor's expense until such time as work has been successfully completed. Once work has been performed as specified and to the satisfaction of the Director of Public Services or his/her designee, the City will assume maintenance responsibilities following the final inspection.

8-13 GUARANTEE

A. **Plants -** All trees, shrubs, ground covers and other plant materials will be guaranteed to take root, grow and thrive for a period of one year after final acceptance of work. Any trees or other plant materials that die back and lose the form and size specified on the approved plans will be replaced by the Contractor at his own expense, even though they have taken root and are growing after the die-back.

Within 15-days of written notification by the City, the Contractor is to remove and replace all guaranteed plant materials which, for any reason, fail to meet the requirements of this guarantee. Replacements will be made to the same specifications and materials as required on the approved plans and will carry this same guarantee from the time they are replaced.

B. **Irrigation -** The entire sprinkler system will be unconditionally guaranteed by the Contractor as to material and workmanship, including settling or backfilling areas below grade, for a minimum period of one year following the date of the final acceptance of the work.

If, during the guarantee period, settlement occurs and adjustments in pipes, valves, sprinkler heads, sod or paving is necessary to bring the system, sod or paving to the proper level of the permanent grades, the Contractor will make the adjustments at his own expense, including the complete restoration of all damaged planting, paving or other improvements of any kind.

Should any operational difficulties in connection with the sprinkler system develop within the specified guarantee period, which, in the opinion of the City, may be due to inferior material and/or workmanship, said difficulties will be immediately corrected by the Contractor to the satisfaction of the City at no additional costs to the City, including any and all other damage caused by such defects.

LANDSCAPING & IRRIGATION DETAILS

Tree Planting *LSC-1*
Tree Planting on Slope *LSC-2*
Groundcover Planting *LSC-3*
Shrub Planting Detail *LSC-4*
Shrub Planting on Slope *LSC-5*
Pipe Trenching Detail *LSC-6*
Landscaping Conduit Under Pavement *LSC-7*
Thrust Block Details *LSC-8*
Above Grade Emitter *LSC-9*
Pop-Up Spray Head *LSC-10*
Gate Valve-3" & Smaller *LSC-11*
Quick Coupling Valve Details *LSC-12*
Tree Bubbler *LSC-13*
Electric Control Valve and Gate Valve *LSC-14*
Below Grade Electric Control and Gate Valve *LSC-15*
Flow Sensor Detail *LSC-16*
Concrete Walk *LSC-17*
Asphalt Concrete Walk *LSC-18*
Exposed Aggregate Paving *LSC-19*
Decomposed Granite *LSC-20*
Collapsible Bollard *LSC-21*
Bike Path Striping/Bollard Installation *LSC-22*
Redwood Header Board *LSC-23*
Post & Cable *LSC-24*
Redwood Fence *LSC-25*
Chain Link Fence Detail One *LSC-26*
Chain Link Fence Detail Two *LSC-27*

[THIS PAGE INTENTIONALLY LEFT BLANK]

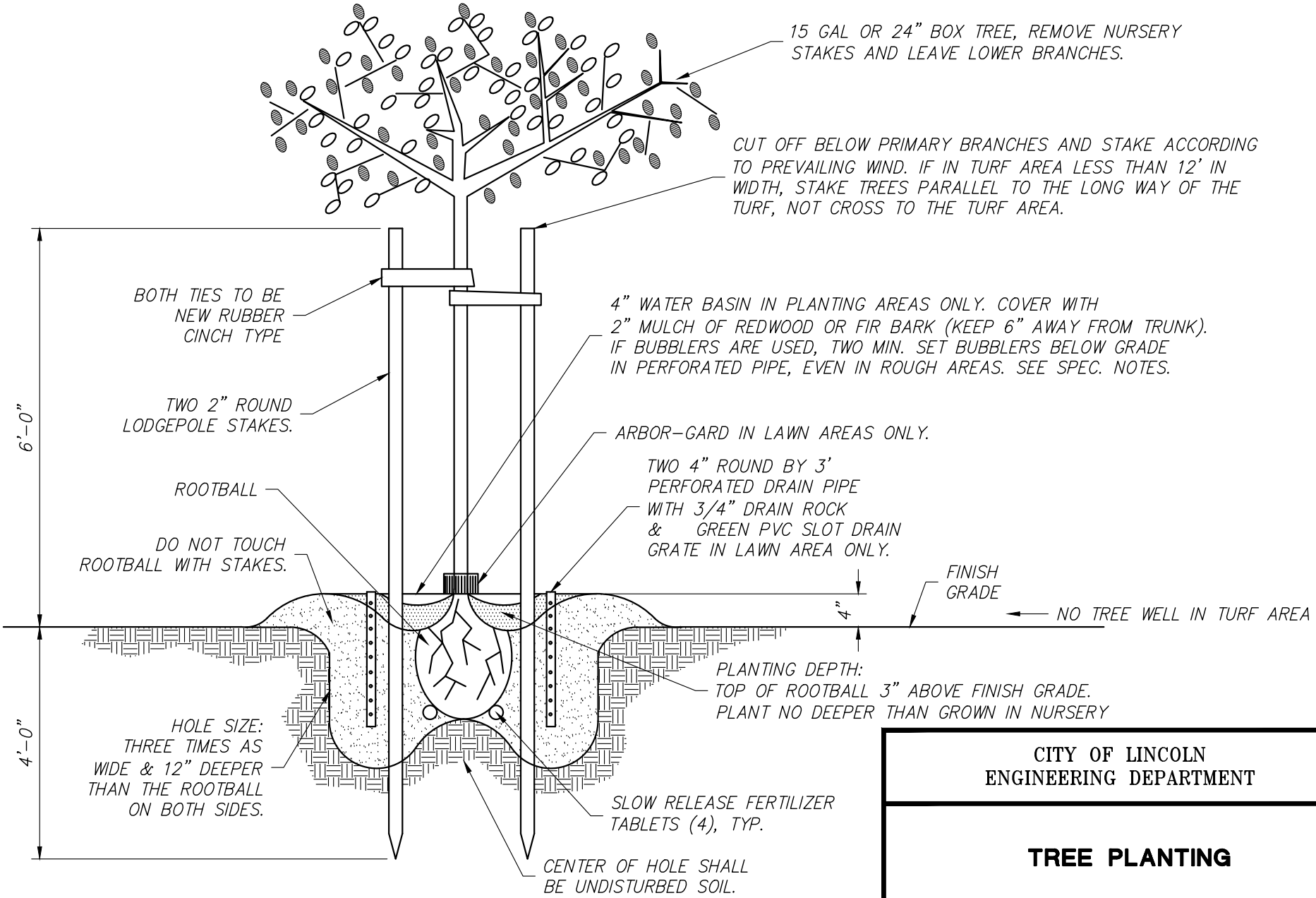

CITY OF LINCOLN
ENGINEERING DEPARTMENT

TREE PLANTING

REVISIONS:	DATES:	APPROVED:
		CITY ENGINEER DATE

SCALE: NONE
DATE: SEPTEMBER 2019
DRAWN BY: C.G.

LSC-1

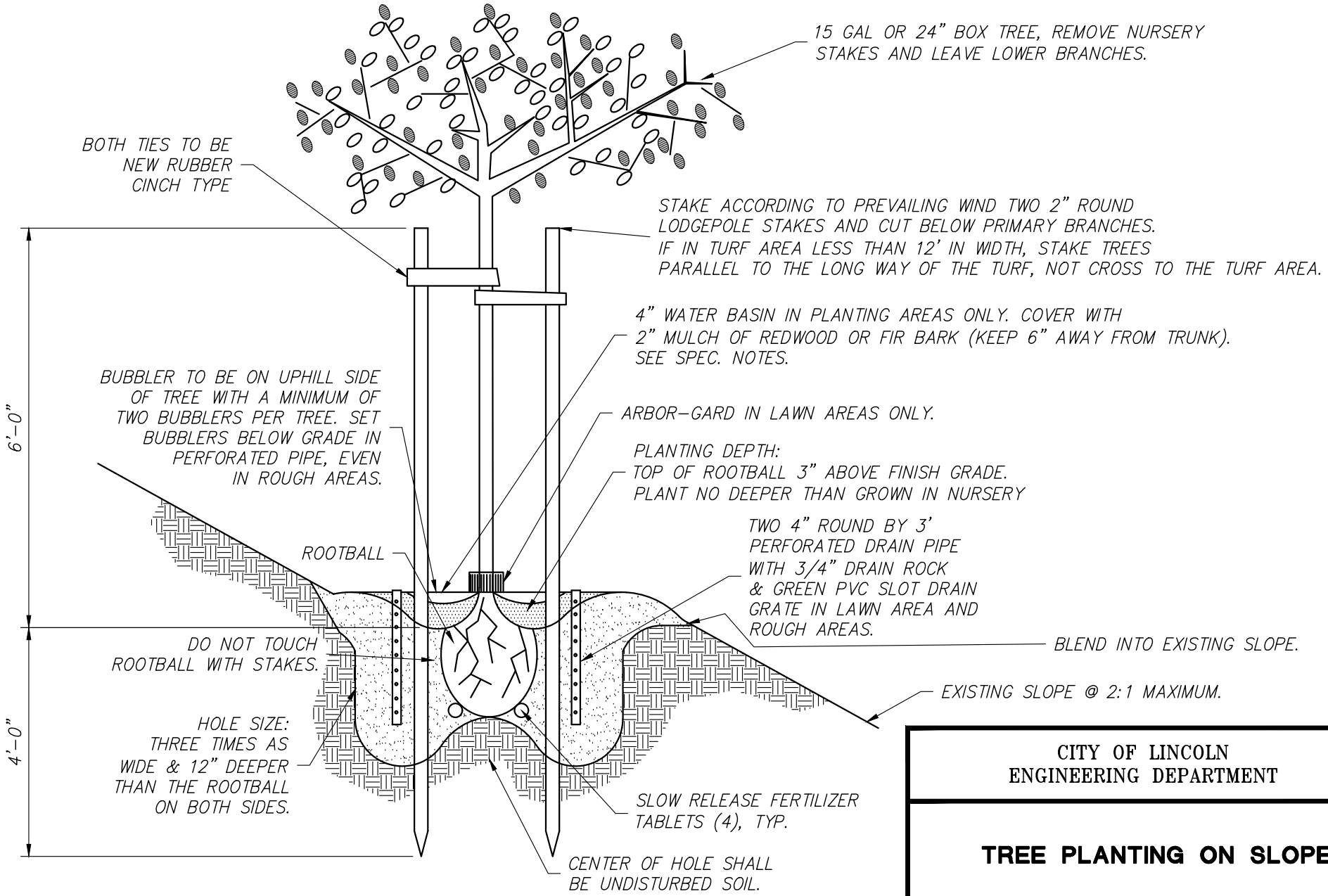

CITY OF LINCOLN
ENGINEERING DEPARTMENT

TREE PLANTING ON SLOPE

REVISIONS:	DATES:	APPROVED:
		CITY ENGINEER DATE

SCALE: NONE
DATE: SEPTEMBER 2019
DRAWN BY: C.G.

LSC-2

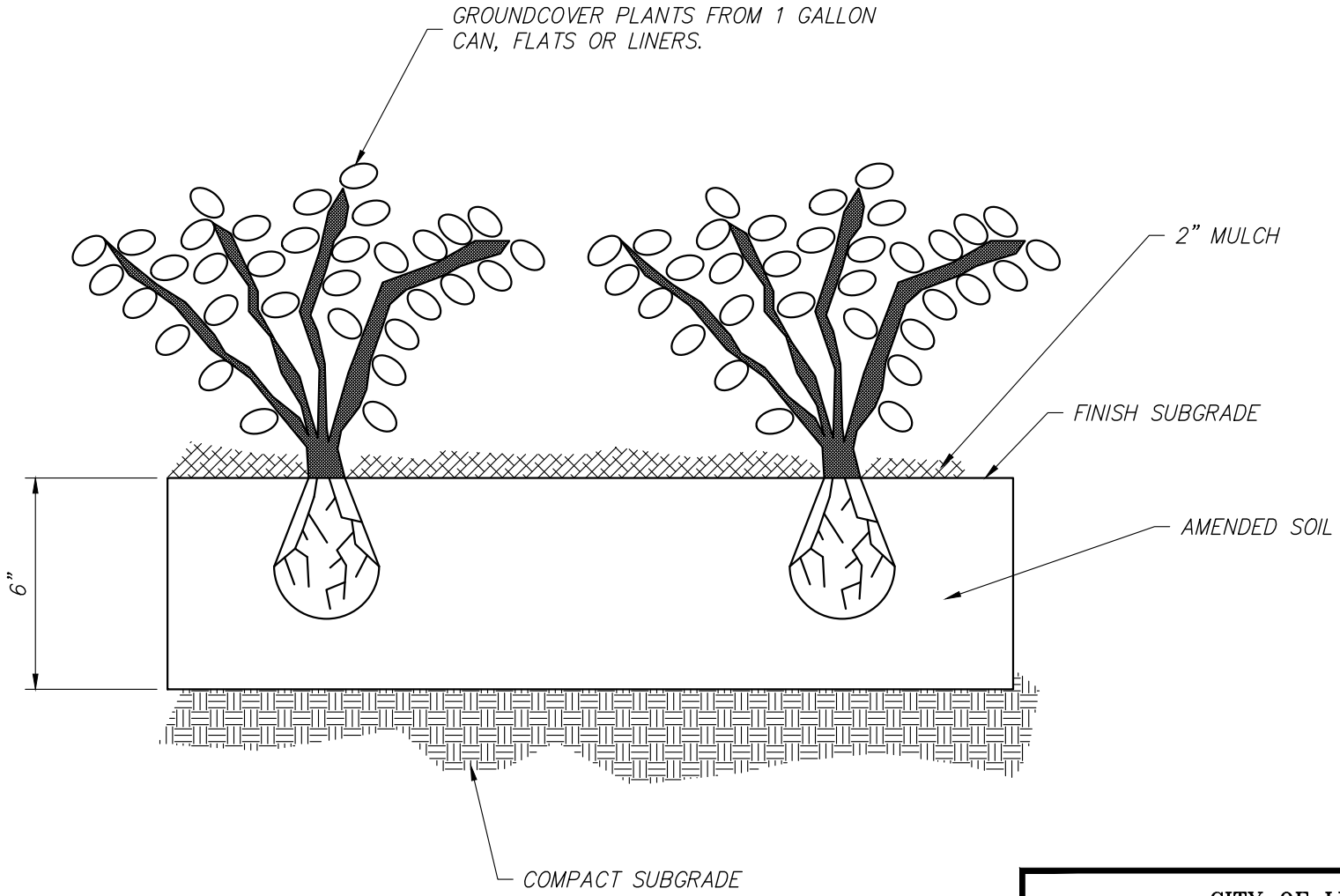

CITY OF LINCOLN
ENGINEERING DEPARTMENT

GROUNDCOVER PLANTING

REVISIONS:	DATES:	APPROVED:
		CITY ENGINEER DATE

SCALE: NONE
DATE: SEPTEMBER 2019
DRAWN BY: C.G.

LSC-3

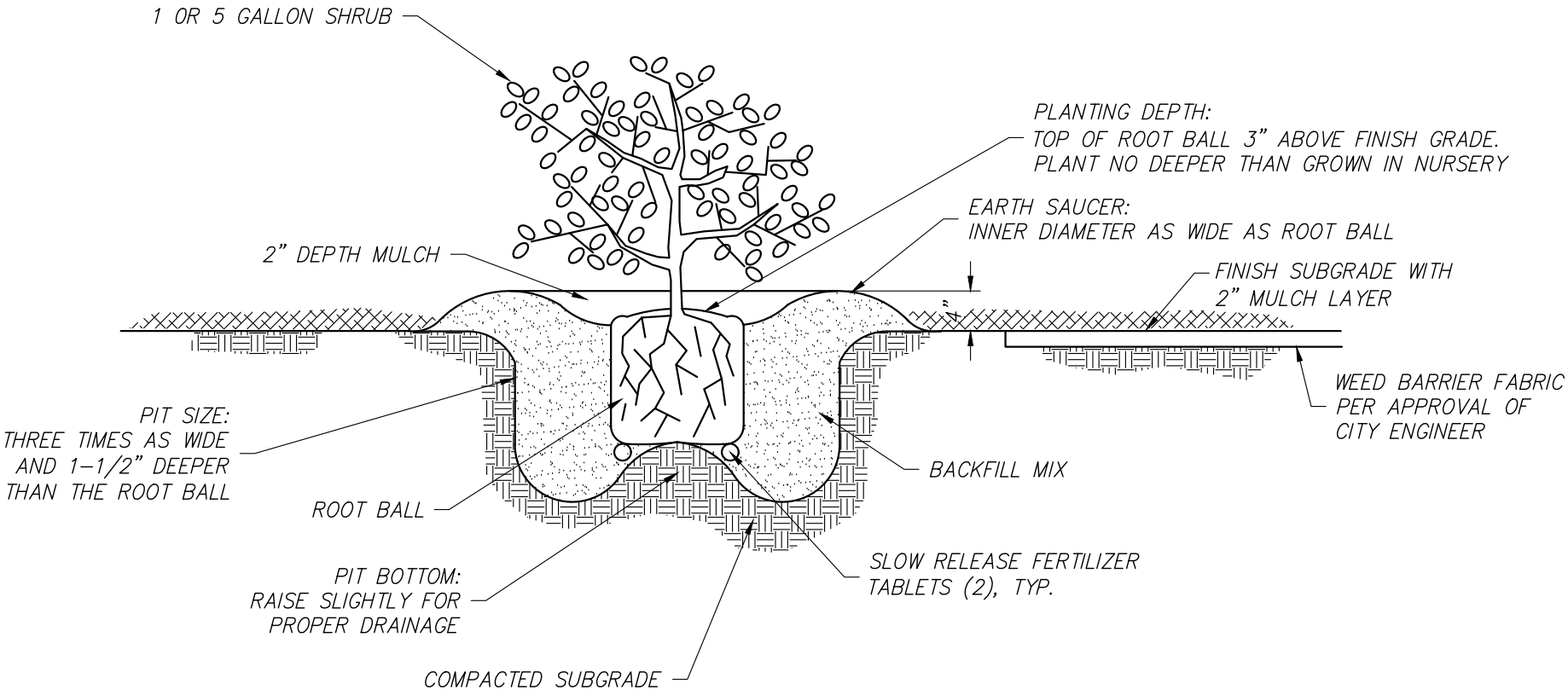

NOTES:

1. PROVIDE CITY WITH PLANTING MIXTURE SPECIFICATIONS
2. PLANTER AREA SHOULD HAVE PRE-EMERGENT HERBICIDE APPLIED BEFORE PLANTING TO PREVENT GERMINATION OF WEED SEEDS
3. WEED BARRIER FABRIC SHALL BE UTILIZED IN ALL PUBLIC MAINTAINED LANDSCAPE AREAS.

CITY OF LINCOLN
ENGINEERING DEPARTMENT

SHRUB PLANTING DETAIL

REVISIONS:	DATES:	APPROVED:
		CITY ENGINEER DATE

SCALE: NONE
DATE: SEPTEMBER 2019
DRAWN BY: C.G.

LSC-4

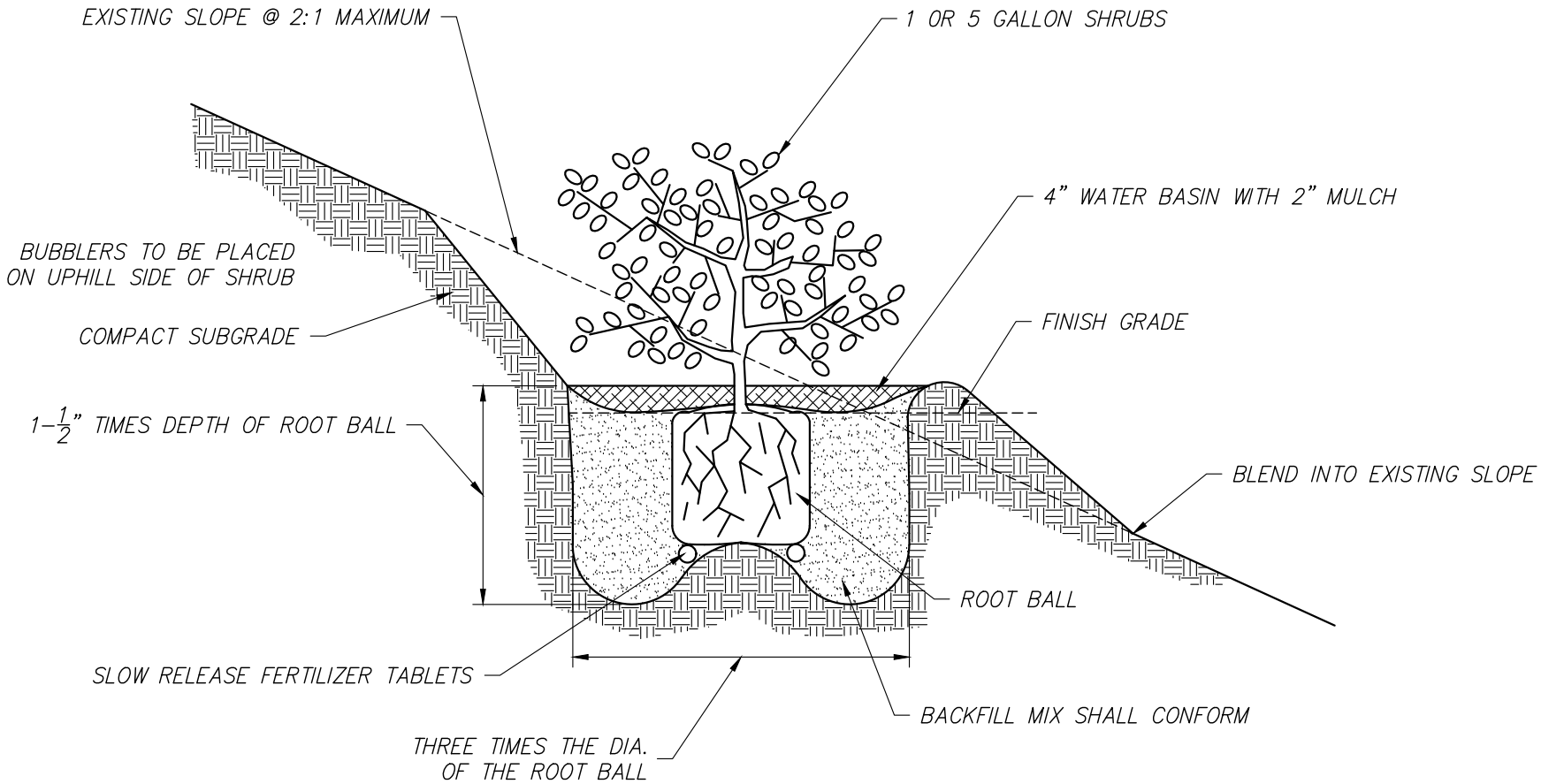

NOTE: PLANTER AREAS SHALL HAVE PRE-EMERGENT HERBICIDE APPLIED BEFORE PLANTING TO PREVENT GERMINATION OF WEED SEEDS

CITY OF LINCOLN
ENGINEERING DEPARTMENT

SHRUB PLANTING ON SLOPE

REVISIONS:	DATES:	APPROVED:
		CITY ENGINEER DATE

SCALE: NONE
DATE: SEPTEMBER 2019
DRAWN BY: C.G.

LSC-5

NON PRESSURE LATERAL

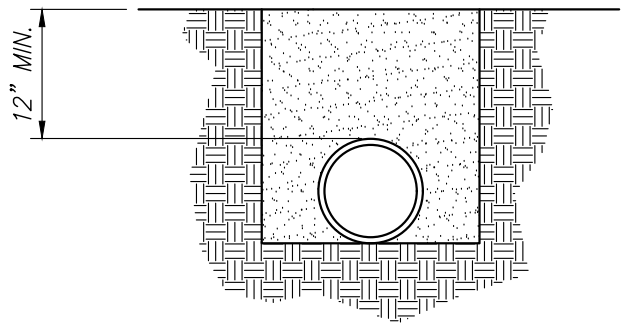

PRESSURE MAIN LINE

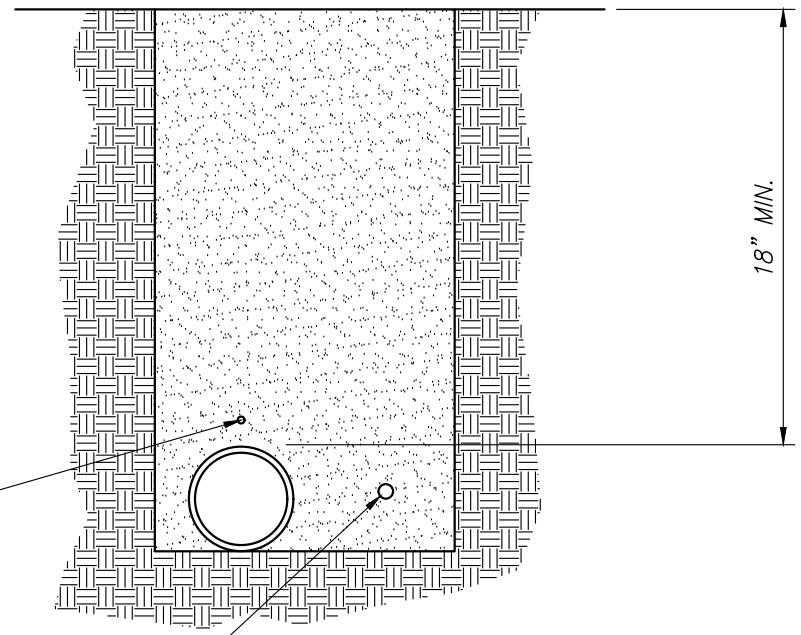

INSTALL #10 JACKETED COPPER TRACE WIRE IN MAINLINE TRENCH, LEAVE 8" LOOP EXPOSED IN EACH VALVE BOX. SOLDER ANY SPLICES IN TRACE WIRE.

CONTROL WIRE ADJACENT TO PRESSURE MAIN LINE. BUNDLE TAPE AT 10'-0" INTERVAL TO PIPE.

BUNDLE TAPE AT 4'-6" INTERVALS FOR MORE THAN ONE WIRE.

CITY OF LINCOLN
ENGINEERING DEPARTMENT

PIPE TRENCHING DETAIL

REVISIONS:	DATES:	APPROVED:
		CITY ENGINEER DATE

SCALE: NONE
DATE: SEPTEMBER 2019
DRAWN BY: C.G.

LSC-6

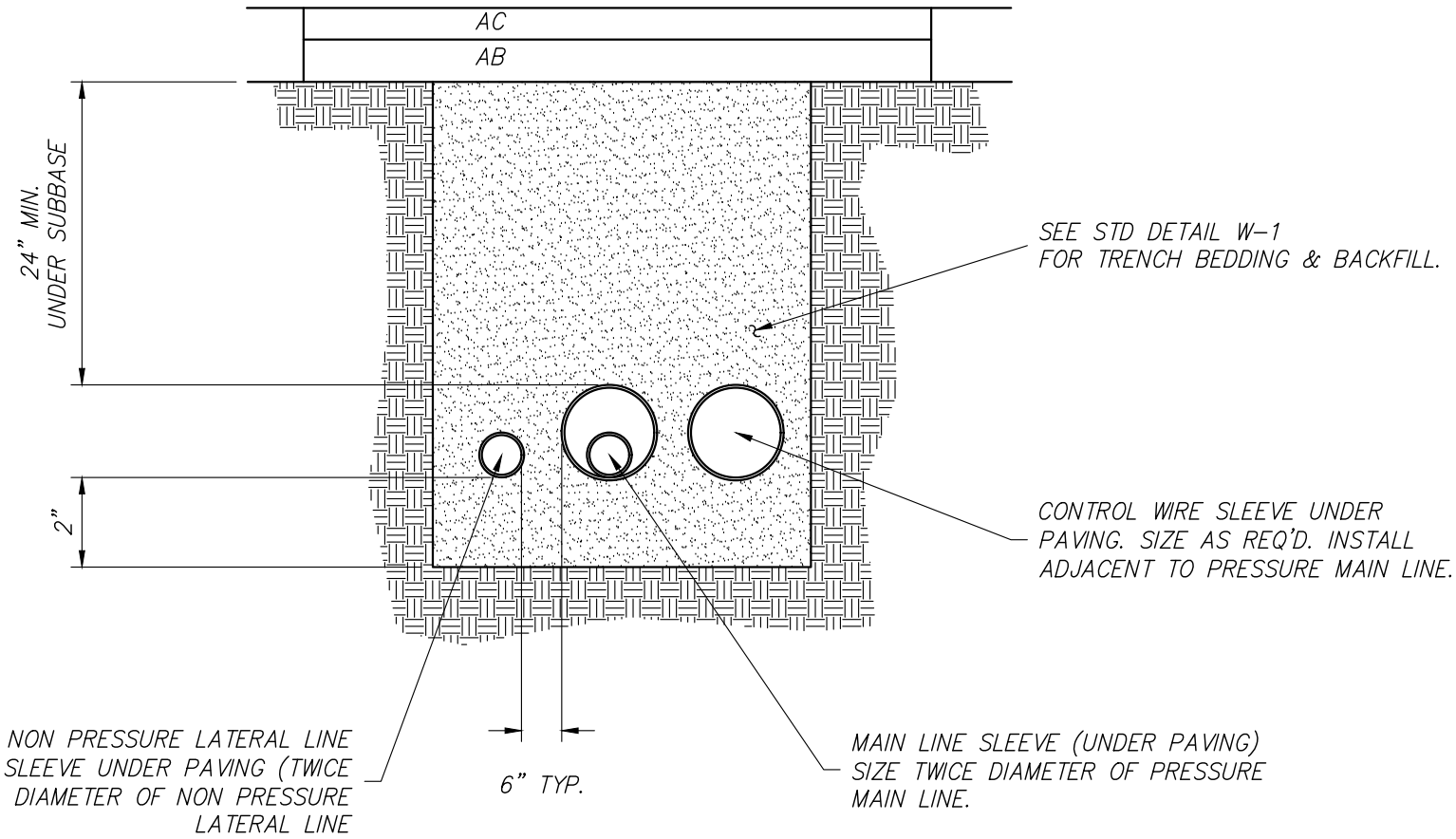

NOTES:

1. ALL SLEEVES TO BE SCH 40 PVC.
2. EXTEND ALL SLEEVES 12" BEYOND EDGE OF HARDSCAPING AT BOTH ENDS, CAP ENDS AND FLAG LOCATIONS.
3. TRENCHES LESS THAN 2 FT IN WIDTH WILL BE BACKFILLED WITH A 2-SAC SLURRY MIX.

CITY OF LINCOLN
ENGINEERING DEPARTMENT

LANDSCAPE CONDUIT UNDER PAVEMENT

REVISIONS:	DATES:	APPROVED:
		CITY ENGINEER DATE

SCALE: NONE
DATE: SEPTEMBER 2019
DRAWN BY: C.G.

LSC-7

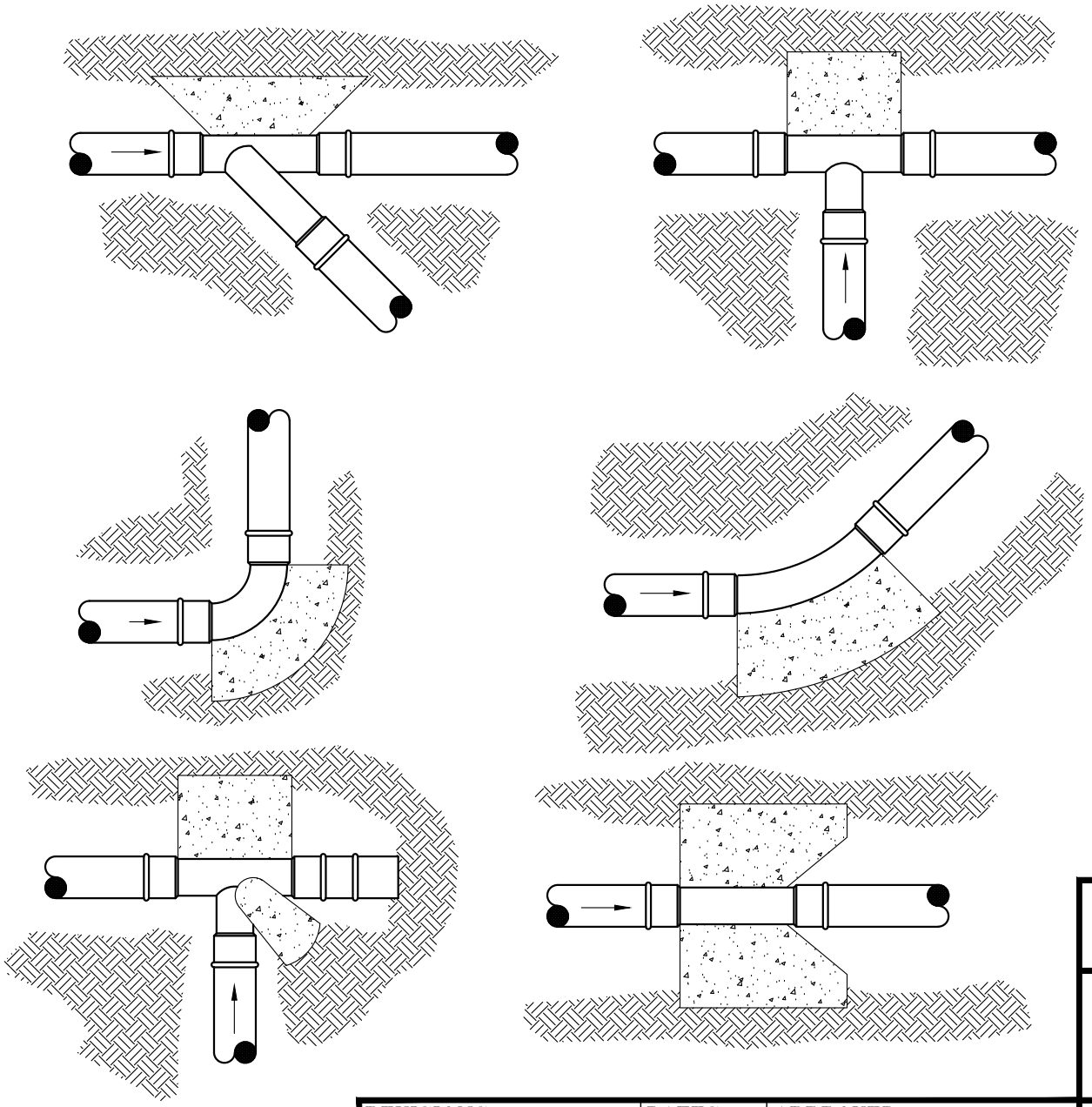

NOTES:

1. *DO NOT COVER JOINTS WITH CONCRETE.*
2. *SIZE THE THRUST BLOCKS AS SPECIFIED BY THE PIPE MANUFACTURER, AND STD DET W-6*

CITY OF LINCOLN
ENGINEERING DEPARTMENT

THRUST BLOCK DETAILS

REVISIONS:	DATES:	APPROVED:
		CITY ENGINEER DATE

SCALE: NONE
DATE: SEPTEMBER 2019
DRAWN BY: C.G.

LSC-8

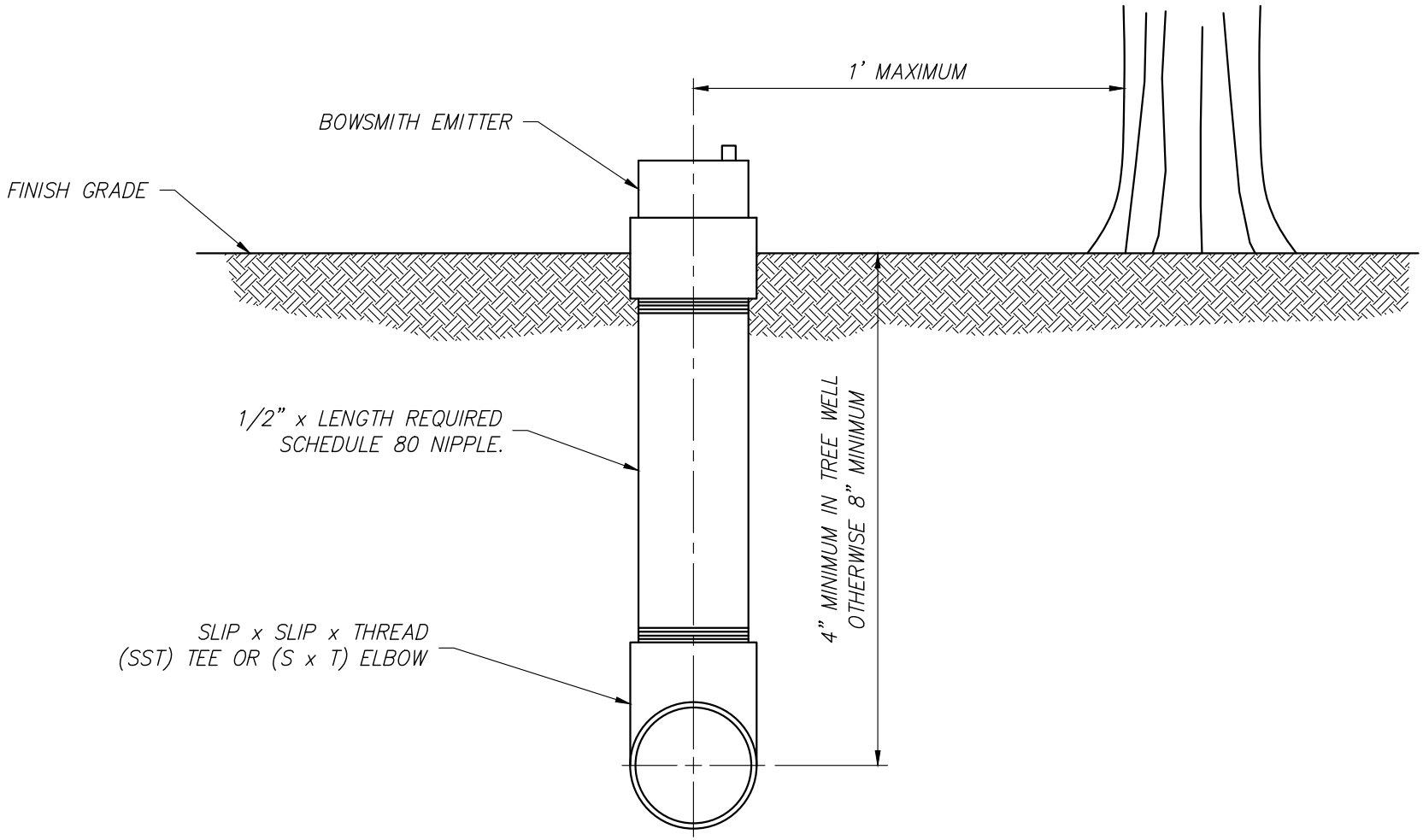

NOTES:

1. LOCATE EMITTER ON UP-HILL SIDE OF THE TREE OR SHRUB.
2. DO NOT TEE STRAIGHT UP OFF LATERAL. TEE HORIZONTAL THEN 90 DEGREES VERTICAL.

CITY OF LINCOLN
ENGINEERING DEPARTMENT

ABOVE GRADE EMITTER

REVISIONS:	DATES:	APPROVED:
		CITY ENGINEER DATE

SCALE: NONE
DATE: SEPTEMBER 2019
DRAWN BY: C.G.

LSC-9

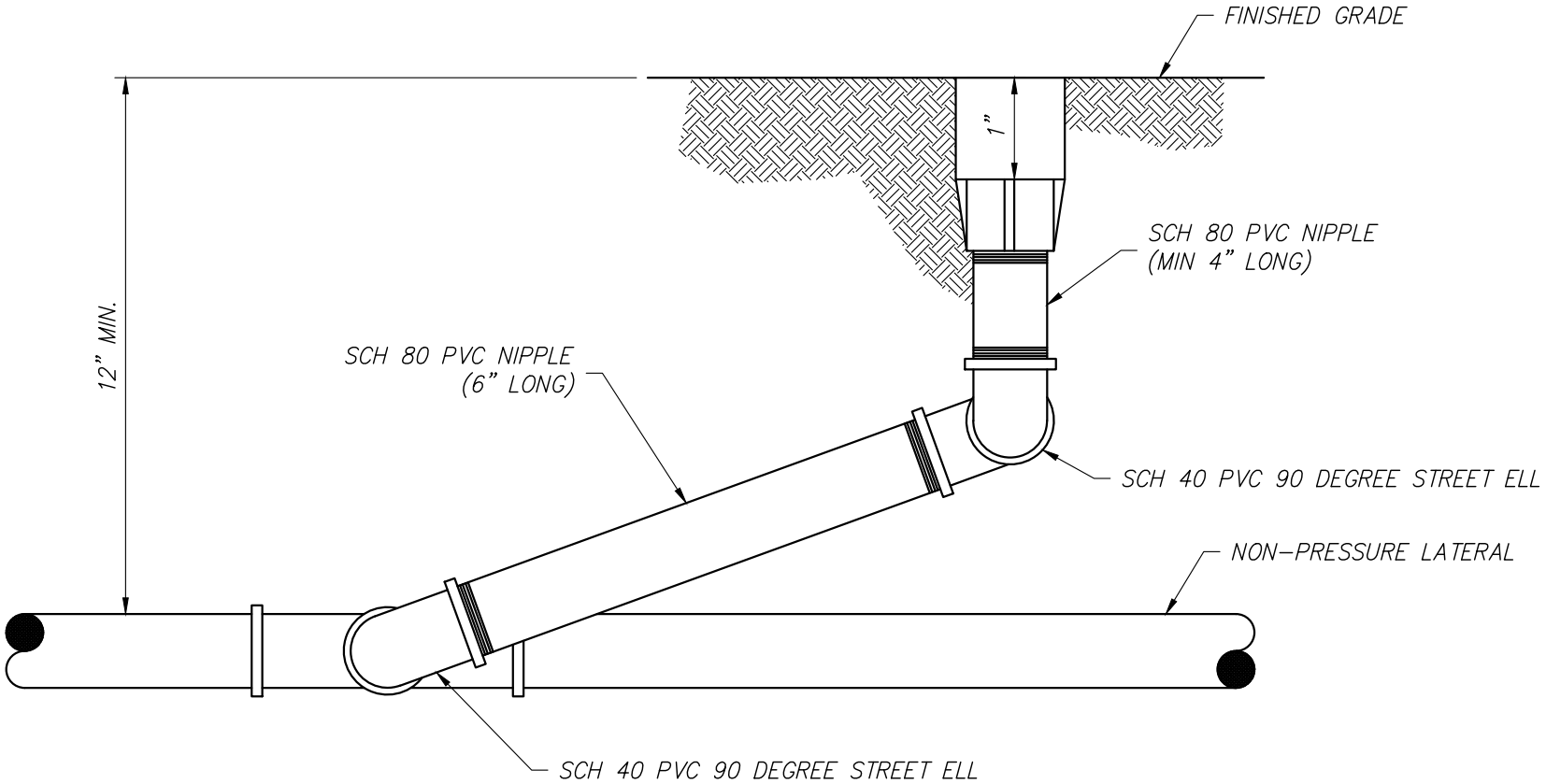

NOTES:

1. LOCATE HEAD 2" FROM WALKS, CURBS, HARDSCAPING, MOW STRIPS, AND HEADER BOARDS.
2. LOCATE STREAM SPRAY/BUBBLERS 6" FROM ALL STRUCTURES, AND SPRAY HEADS 12" FROM ALL STRUCTURES, BUT 6" FROM ALL STRUCTURES IN GROUND COVER AREAS.
3. USE TEFLON TAPE ON ALL THREADED FITTINGS EXCEPT BETWEEN MARLEX FITTINGS.

CITY OF LINCOLN
ENGINEERING DEPARTMENT

POP-UP SPRAY HEAD

REVISIONS:	DATES:	APPROVED:
		CITY ENGINEER DATE

SCALE: NONE
DATE: SEPTEMBER 2019
DRAWN BY: C.G.

LSC-10

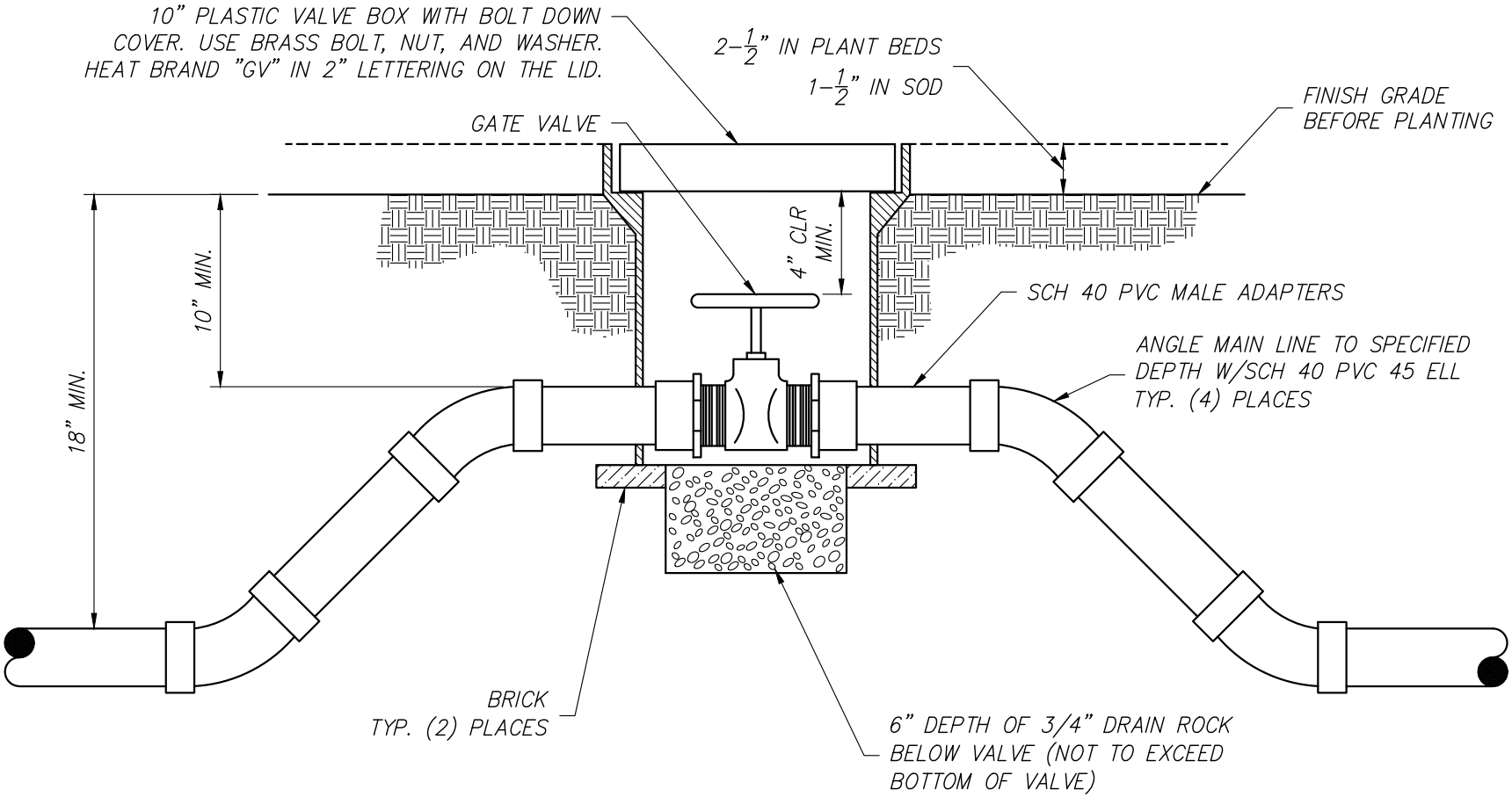

NOTES:

1. PLACE 3/4" DIA. ROCK PRIOR TO INSTALLATION OF VALVE BOX.
2. GATE VALVE AND FITTINGS SHALL BE LINE SIZE UNLESS NOTED OTHERWISE.
3. USE TEFLON TAPE ON ALL THREADED FITTINGS.

CITY OF LINCOLN
ENGINEERING DEPARTMENT

GATE VALVE - 3" & SMALLER

REVISIONS:	DATES:	APPROVED:
		CITY ENGINEER DATE

SCALE: NONE
DATE: SEPTEMBER 2019
DRAWN BY: C.G.

LSC-11

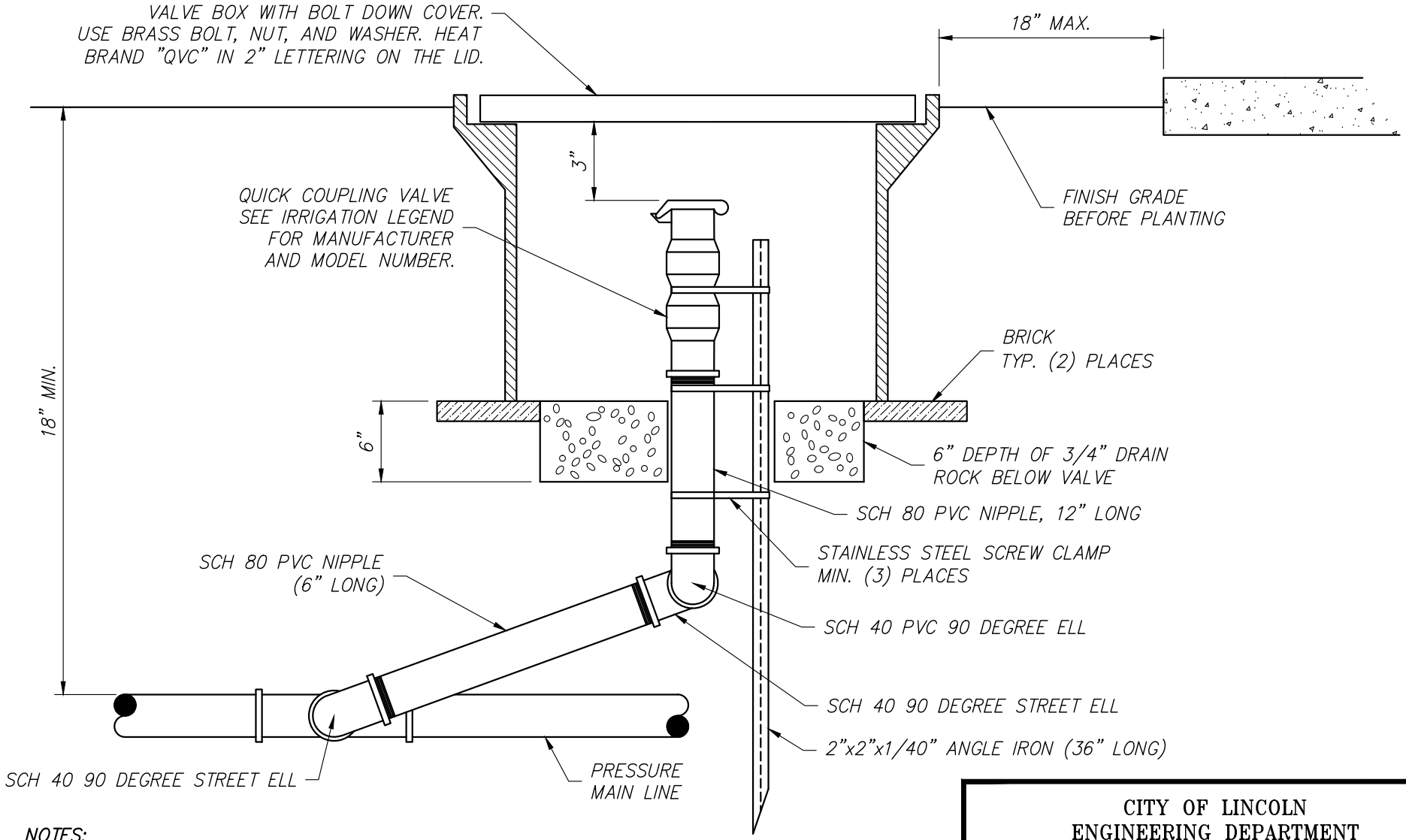

NOTES:

1. SEE 8-5(1) FOR VALVE BOX INSTALLATION DETAILS.
2. USE TEFLON TAPE ON ALL THREADED CONNECTIONS.

CITY OF LINCOLN
ENGINEERING DEPARTMENT

QUICK COUPLING VALVE DETAIL

REVISIONS:	DATES:	APPROVED:
		CITY ENGINEER DATE

SCALE: NONE
DATE: SEPTEMBER 2019
DRAWN BY: C.G.

LSC-12

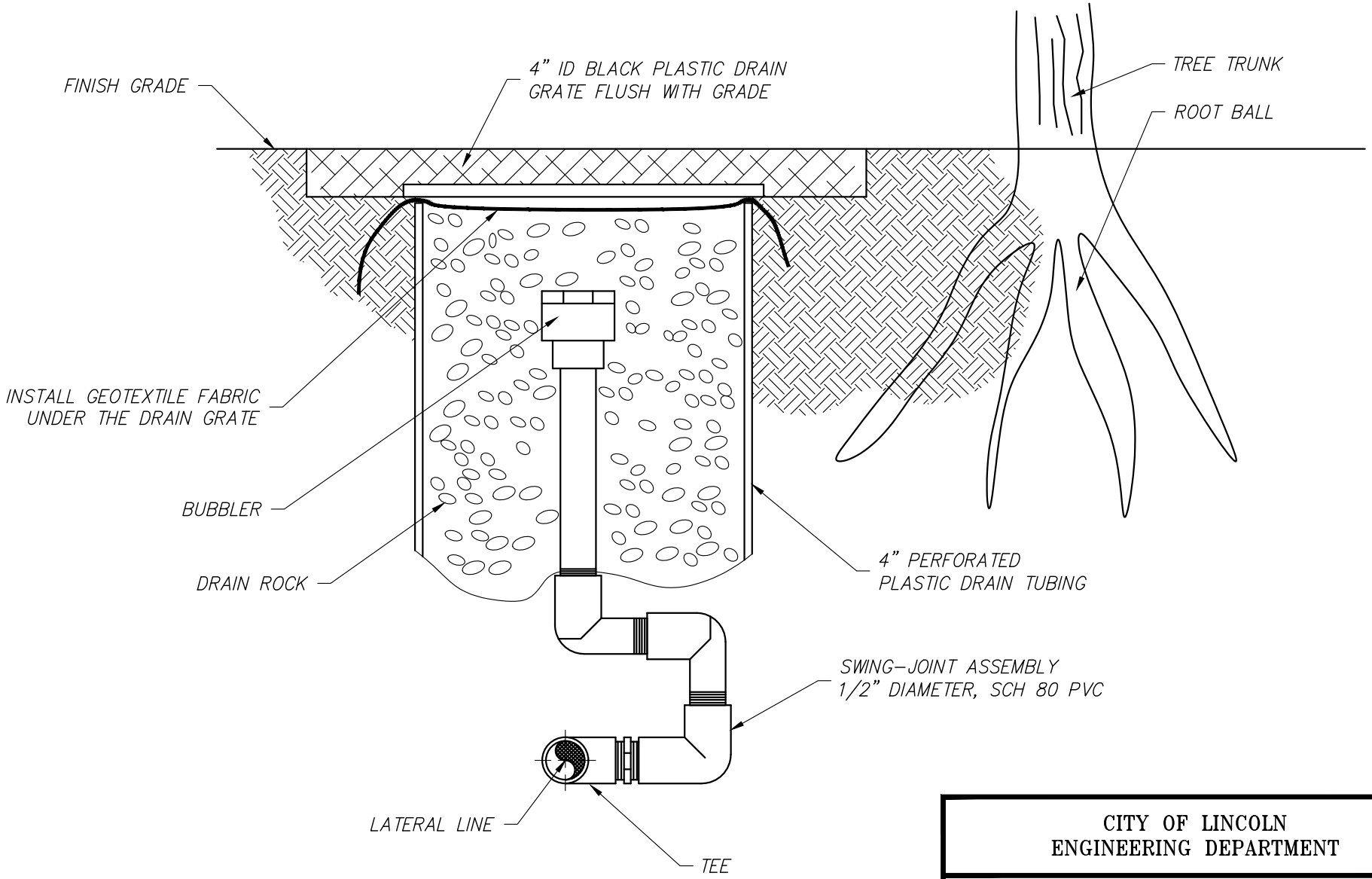

NOTE: ROOT BALL ADJACENT TO PERFORATED PIPE HOLES TO FACE ROOT BALL.

CITY OF LINCOLN
ENGINEERING DEPARTMENT

TREE BUBBLER

REVISIONS:	DATES:	APPROVED:
		CITY ENGINEER DATE

SCALE: NONE
DATE: SEPTEMBER 2019
DRAWN BY: C.G.

LSC-13

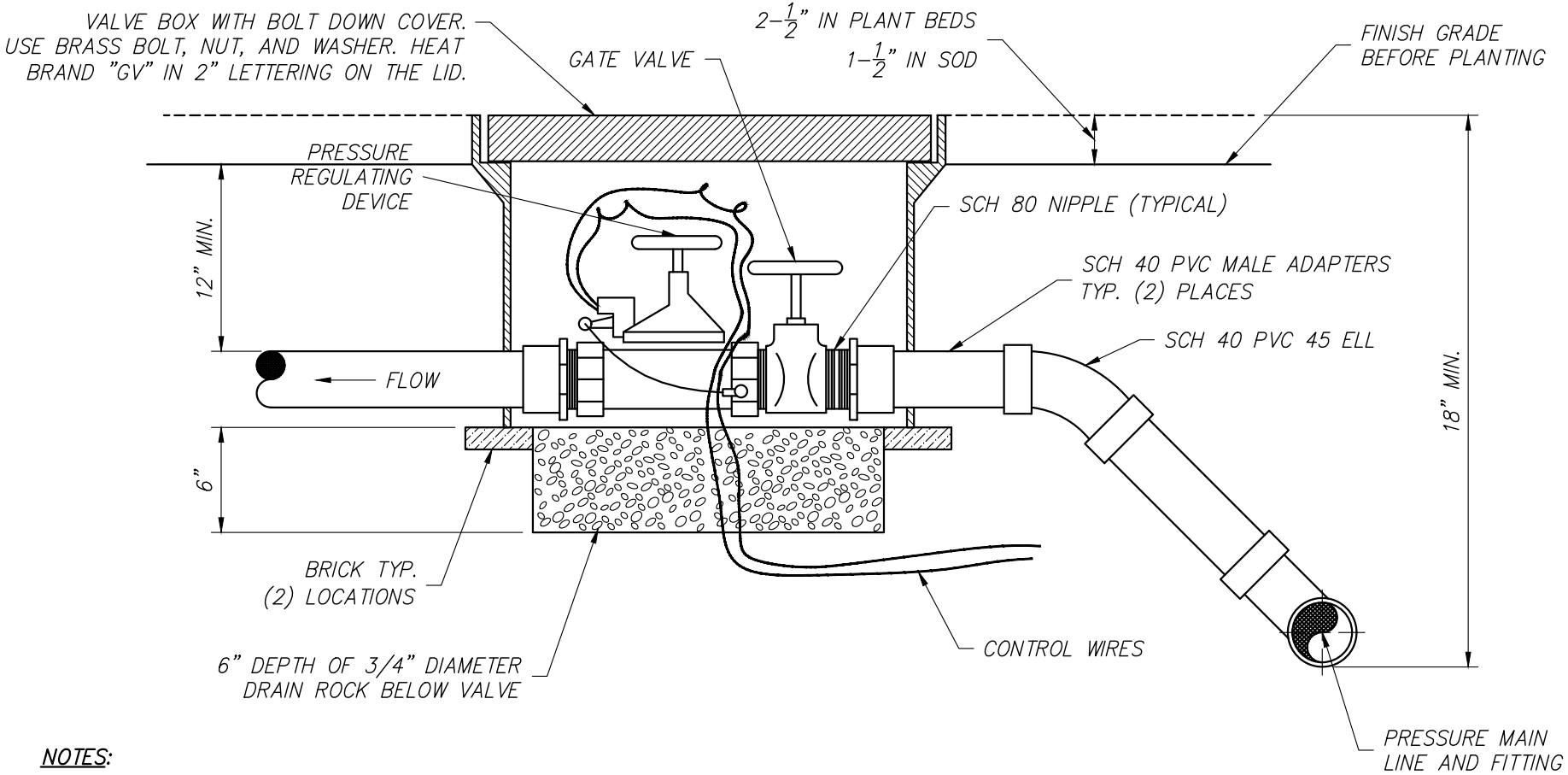

NOTES:

1. INSTALL CONTROL VALVES A MINIMUM OF 12" FROM STRUCTURES OR HARDSCAPE.
2. INSTALL VALVES IN PLANT BEDS WHEREVER POSSIBLE.
3. PLACE VALVE BOX AT RIGHT ANGLES TO STRUCTURES OR HARDSCAPE.
4. SEE 8-5 (I) FOR VALVE BOX INSTALLATION DETAILS.
5. USE TEFLON TAPE ON ALL MALE THREADS.

CITY OF LINCOLN
ENGINEERING DEPARTMENT

ELECTRIC CONTROL VALVE AND GATE VALVE

REVISIONS:	DATES:	APPROVED:
		CITY ENGINEER DATE

SCALE: NONE
DATE: SEPTEMBER 2019
DRAWN BY: C.G.

LSC-14

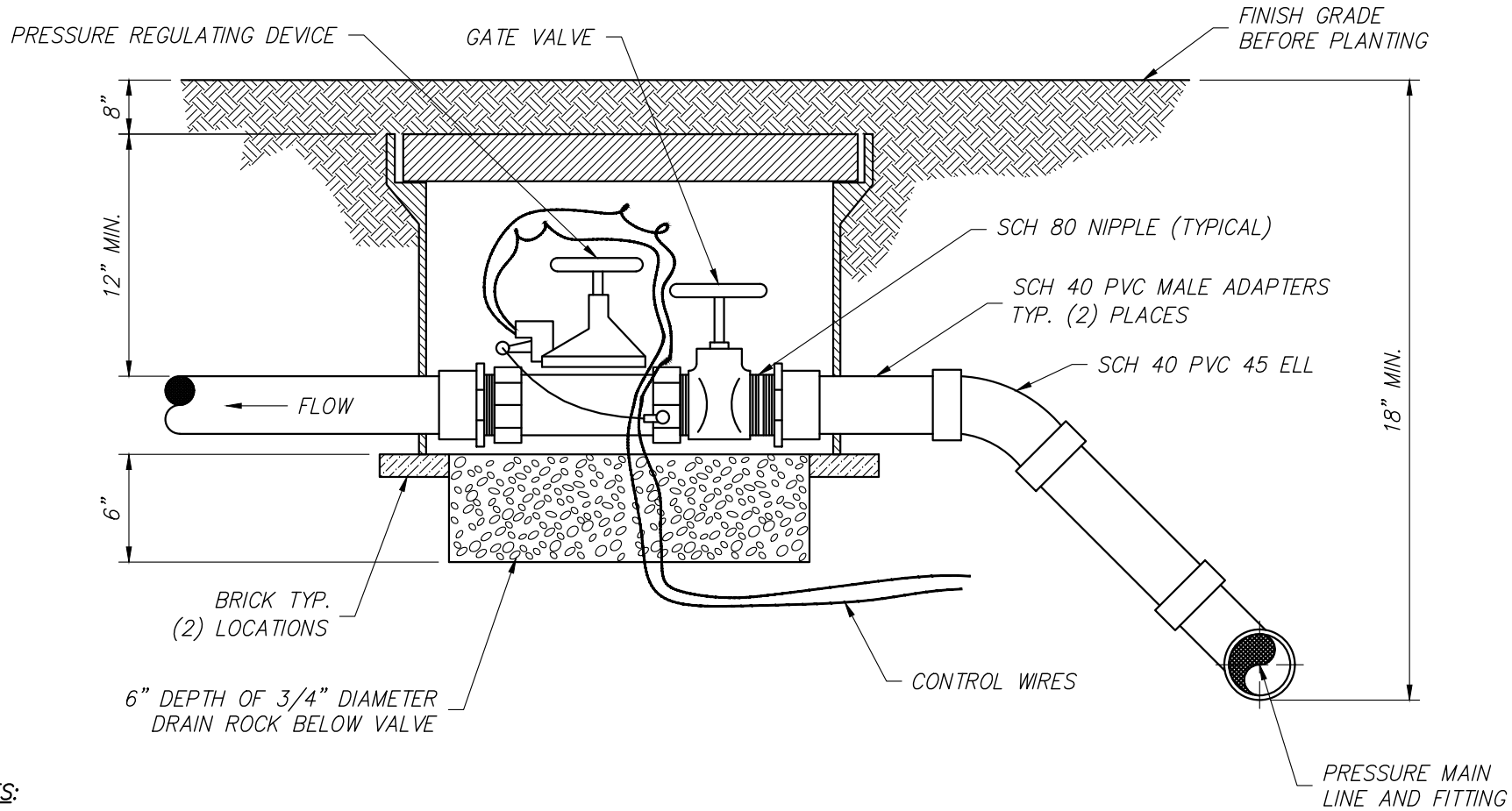

NOTES:

1. INSTALL CONTROL VALVES A MINIMUM OF 12" FROM STRUCTURES OR HARDSCAPE.
2. INSTALL VALVES IN PLANT BEDS WHEREVER POSSIBLE.
3. PLACE VALVE BOX AT RIGHT ANGLES TO STRUCTURES OR HARDSCAPE.
4. SEE 8-5 (I) FOR VALVE BOX INSTALLATION DETAILS
5. USE TEFLON TAPE ON ALL MALE THREADS.

CITY OF LINCOLN
ENGINEERING DEPARTMENT

BELOW GRADE ELECTRIC CONTROL AND GATE VALVE

REVISIONS:	DATES:	APPROVED:
		CITY ENGINEER DATE

SCALE: NONE
DATE: SEPTEMBER 2019
DRAWN BY: C.G.

LSC-15

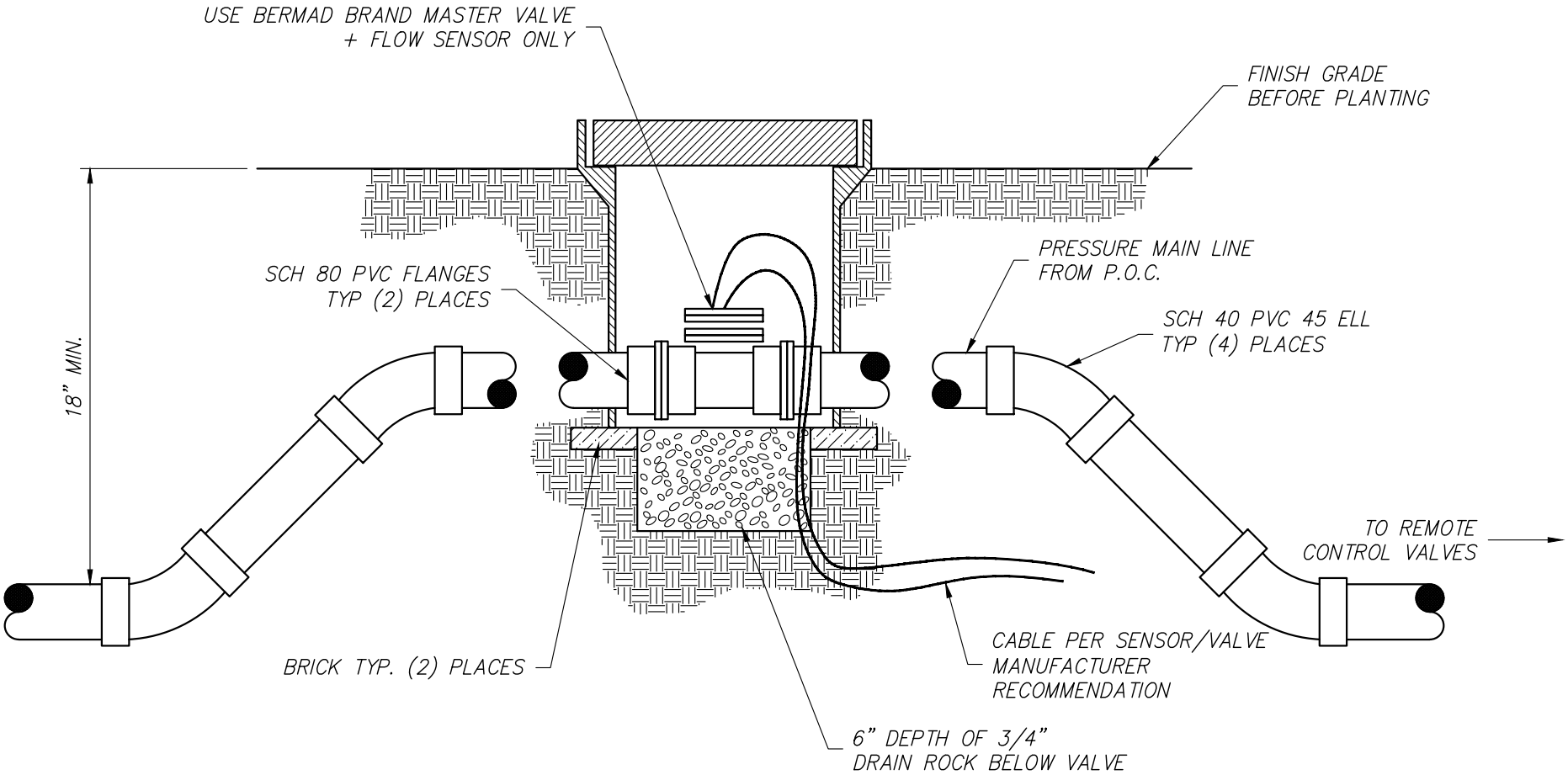

NOTES:

1. INSTALL FLOW SENSOR A MINIMUM OF 12" FROM STRUCTURES OR HARDSCAPING
2. INSTALL FLOW SENSOR IN PLANT BEDS WHEREVER POSSIBLE
3. PLACE VALVE BOX AT RIGHT ANGLE TO STRUCTURES OR HARDSCAPING
4. SENSOR CABLE SHALL BE BROUGHT BACK TO CONTROLLER IN 1" GRAY SCH 40 PVC CONDUIT

CITY OF LINCOLN
ENGINEERING DEPARTMENT

FLOW SENSOR DETAIL

REVISIONS:	DATES:	APPROVED:
		CITY ENGINEER DATE

SCALE: NONE
DATE: SEPTEMBER 2019
DRAWN BY: C.G.

LSC-16

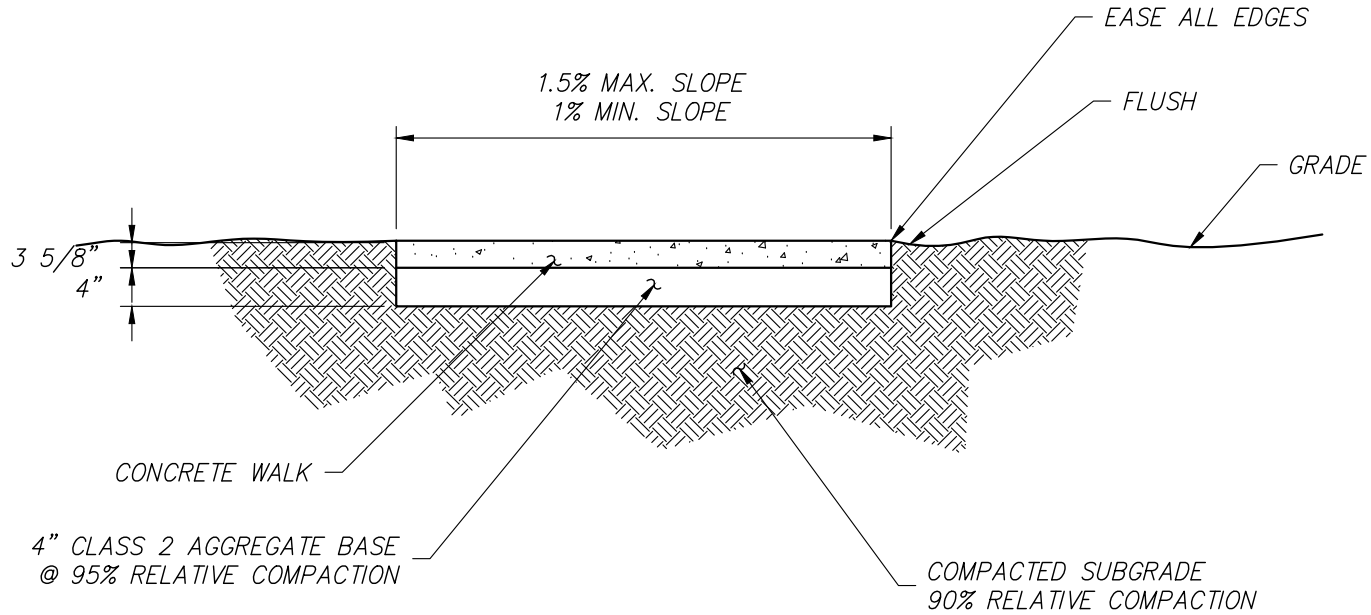

NOTES:

1. PROVIDE WEAKENED PLANE JOINTS 1" DEEP AT 10'-0" INTERVALS.
2. PROVIDE EXPANSION JOINT AT 20'-0" INTERVALS WHERE CONCRETE WALK JOINS ANOTHER.
3. CLASS "A" SIX SACK CONCRETE.
4. BROOM FINISHED UNLESS SPECIFIED OTHERWISE.

CITY OF LINCOLN
ENGINEERING DEPARTMENT

CONCRETE WALK

REVISIONS:	DATES:	APPROVED:
		CITY ENGINEER DATE

SCALE: NONE
DATE: SEPTEMBER 2019
DRAWN BY: C.G.

LSC-17

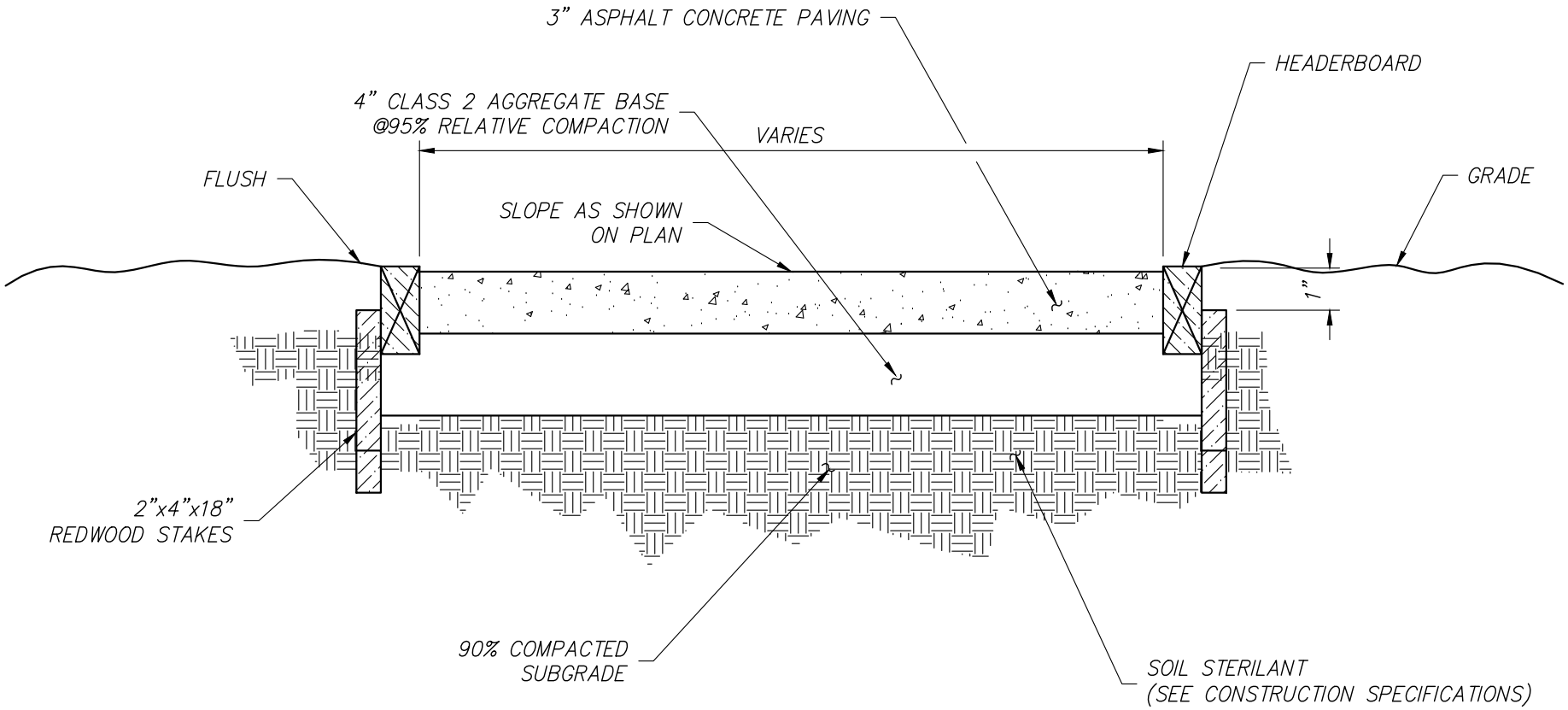

HEADER BOARD SHALL BE:

1. REDWOOD, ROUGH, CONSTRUCTION HEART GRADE, IN ACCORDANCE TO CALIFORNIA REDWOOD ASSOCIATION GRADING RULES.
2. DOUGLAS FIR, ROUGH, CONSTRUCTION GRADE, PRESSURE TREATED FOR UNDERGROUND USE.
3. ALL NAILS SHALL BE GALVANIZED – 16 PENNY.

CITY OF LINCOLN
ENGINEERING DEPARTMENT

ASPHALT CONCRETE WALK

REVISIONS:	DATES:	APPROVED:
		CITY ENGINEER DATE

SCALE: NONE
DATE: SEPTEMBER 2019
DRAWN BY: C.G.

LSC-18

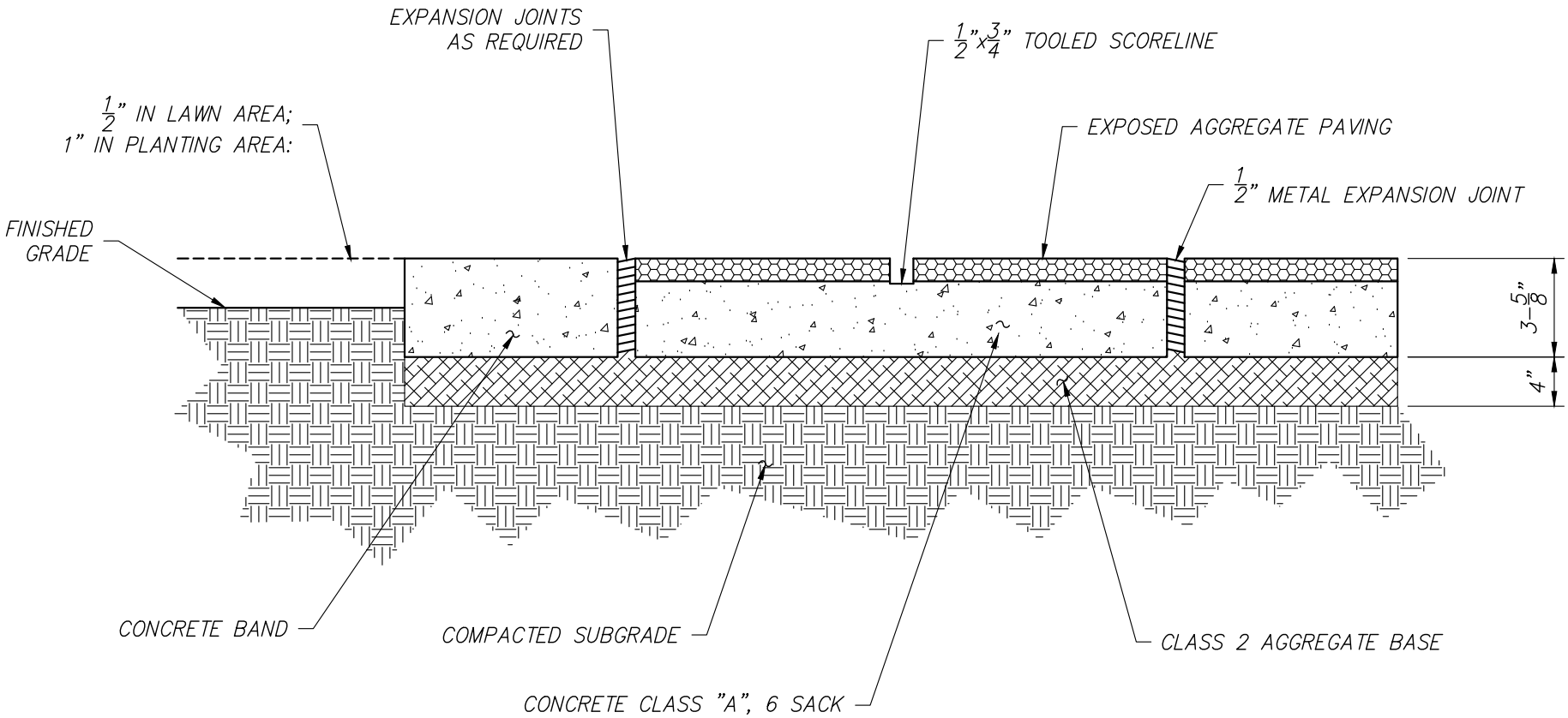

NOTES:

1. REFER TO APPROVED IMPROVEMENT PLANS FOR AGGREGATE SPECS.
2. REFER TO LAYOUT AND CONSTRUCTION PLANS AND APPROPRIATE DETAILS FOR LOCATION OF EXPANSION JOINTS AND SCORELINES.

CITY OF LINCOLN
ENGINEERING DEPARTMENT

EXPOSED AGGREGATE PAVING

REVISIONS:	DATES:	APPROVED:
		CITY ENGINEER DATE

SCALE: NONE
DATE: SEPTEMBER 2019
DRAWN BY: C.G.

LSC-19

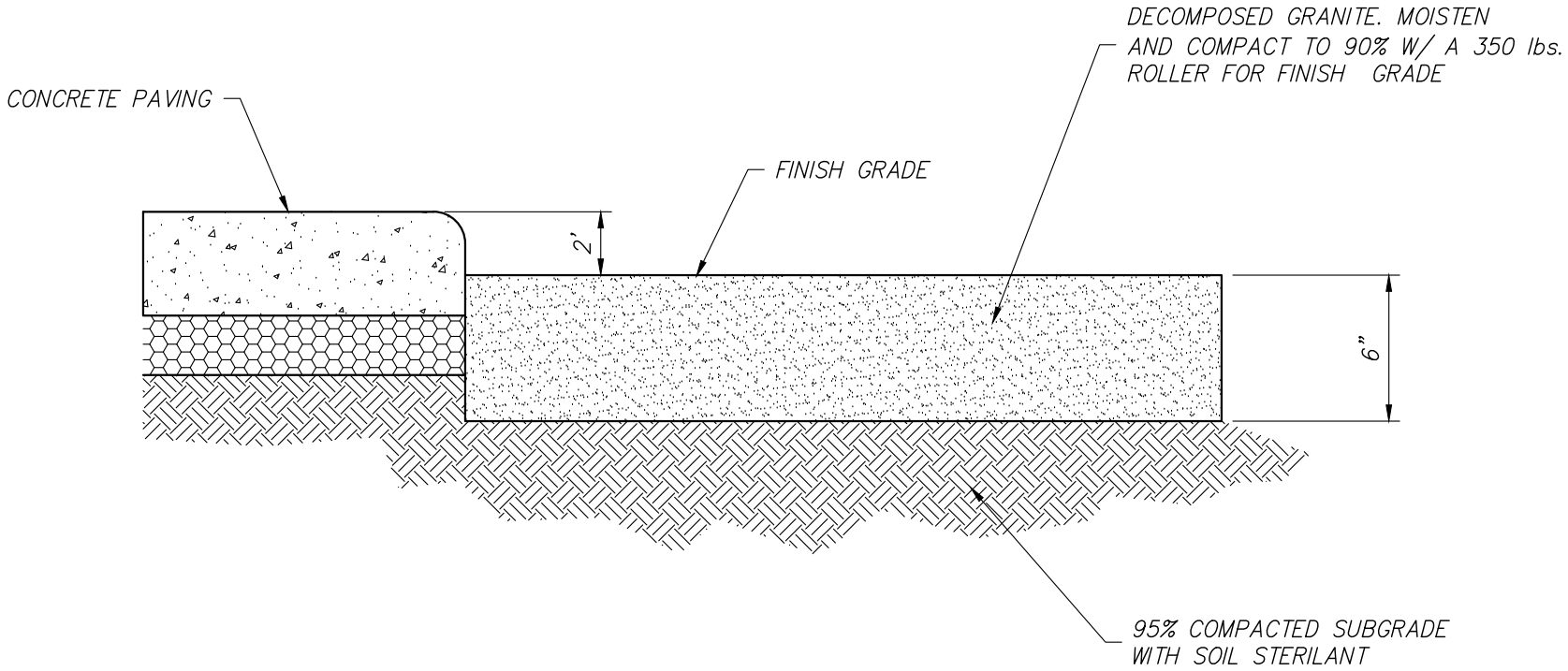

'SECTION'

CONTRACTOR TO SUBMIT SAMPLE OF LIGHT TAN DECOMPOSED GRANITE FOR APPROVAL BY CITY ENGINEER

CITY OF LINCOLN
ENGINEERING DEPARTMENT

DECOMPOSED GRANITE

REVISIONS:	DATES:	APPROVED:
		CITY ENGINEER DATE

SCALE: NONE
DATE: SEPTEMBER 2019
DRAWN BY: C.G.

LSC-20

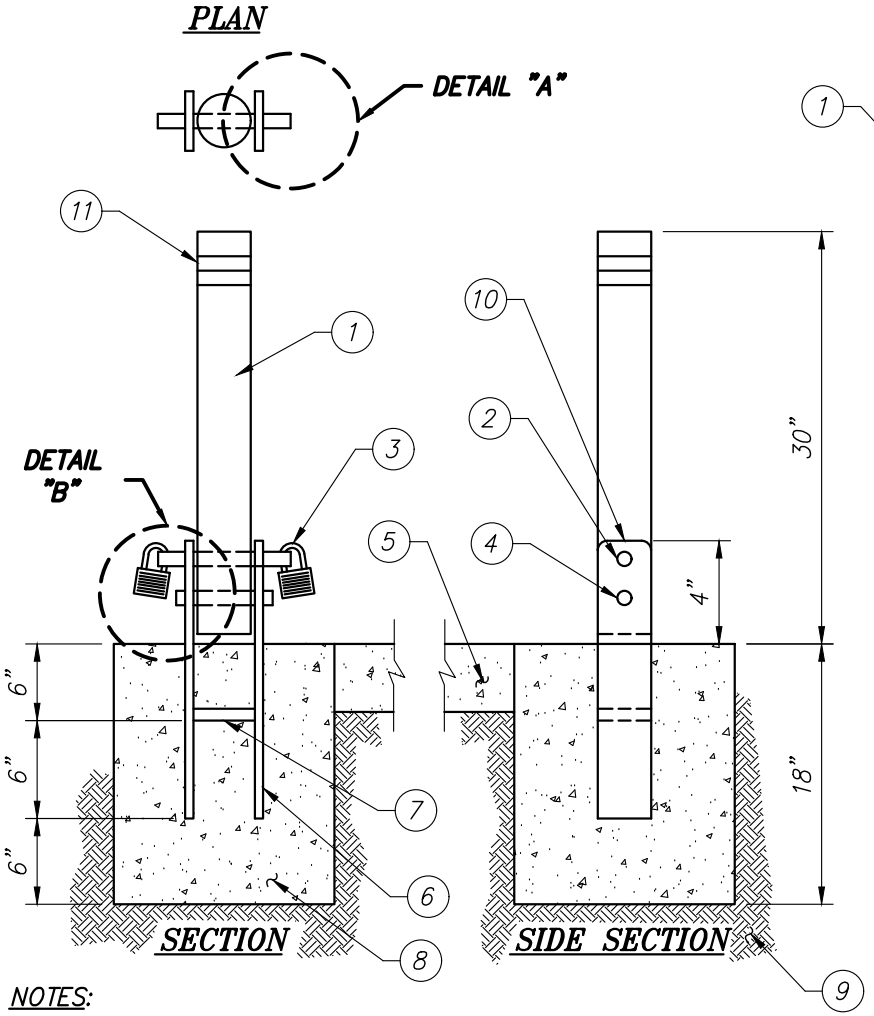

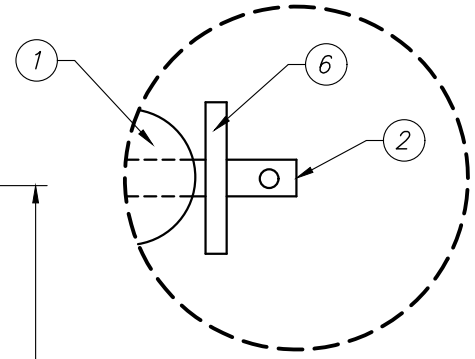

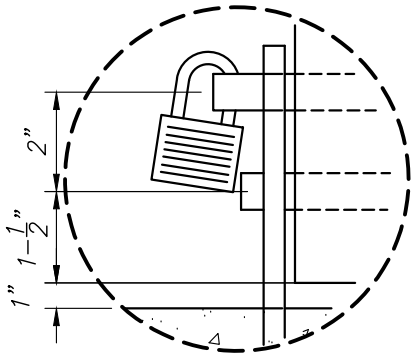

LEGEND:

1. 11 GAUGE, 2 3/4" O.D. ROUND STEEL POST WITH CAPPED TOP & 3/4" HOLES FOR SWIVEL ROD AND 9/16" HOLES FOR LOCKING PIN. EASE ALL EDGES OF STEEL POST.
2. 3/8" DIA x 6" LOCKING PIN WITH 9/16" HOLES 1/4" FROM EACH END OF PIN OR 3/4" DIA x 5" LOCKING PIN WITH WITH FLAT WASHER ON ONE END AND 9/16" HOLE 1/4" FROM END OF PIN.
3. PADLOCKS TO BE PROVIDED BY CONTRACTOR
4. 5/8" DIA STEEL SWIVEL ROD. WELD SWIVEL ROD TO SIDE PLATES – NO WASHERS.
5. CONCRETE PAVING / ASPHALT. HOLD CONCRETE 2" BELOW FINISHED GRADE. BLACK TOP REST.
6. 3/8" x 16" x 4" STEEL BASE PLATE WITH 1" RADIUS CORNERS. EASE ALL EDGES.
7. 3/8" STEEL BRACE. FILET WELD BOTH SIDES TO BASE PLATES.
8. 2" ROUND CONCRETE x 18" DEEP FOOTING.
9. COMPACTED SUBGRADE.
10. 1" RADIUS CORNERS, TYP.
11. 1" RED DIAMOND REFLECTIVE TAPE.

NOTES:

1. ALL PIPE SHALL BE BLACK STEEL PIPE.
2. ALL JOINTS SHALL BE WELDED IN ACCORDANCE W/ CA STATE STANDARD SPECIFICATIONS FOR WELDING STRUCTURAL STEEL.
3. ALL PARTS (EXCEPT PADLOCK) SHALL BE PAINTED W/ 2 COATS OF ZINC CHROMATE PRIMER AND 2 COATS OF EXTERIOR ENAMEL. COLOR: YELLOW PER CITY STANDARD.
4. BOLLARD SHALL BE INSTALLED SUCH THAT WHEN FOLDED IT LAYS FLAT.

CITY OF LINCOLN
ENGINEERING DEPARTMENT

COLLAPSIBLE BOLLARD

REVISIONS:	DATES:	APPROVED:
		CITY ENGINEER DATE

SCALE: NONE
DATE: SEPTEMBER 2019
DRAWN BY: C.G.

LSC-21

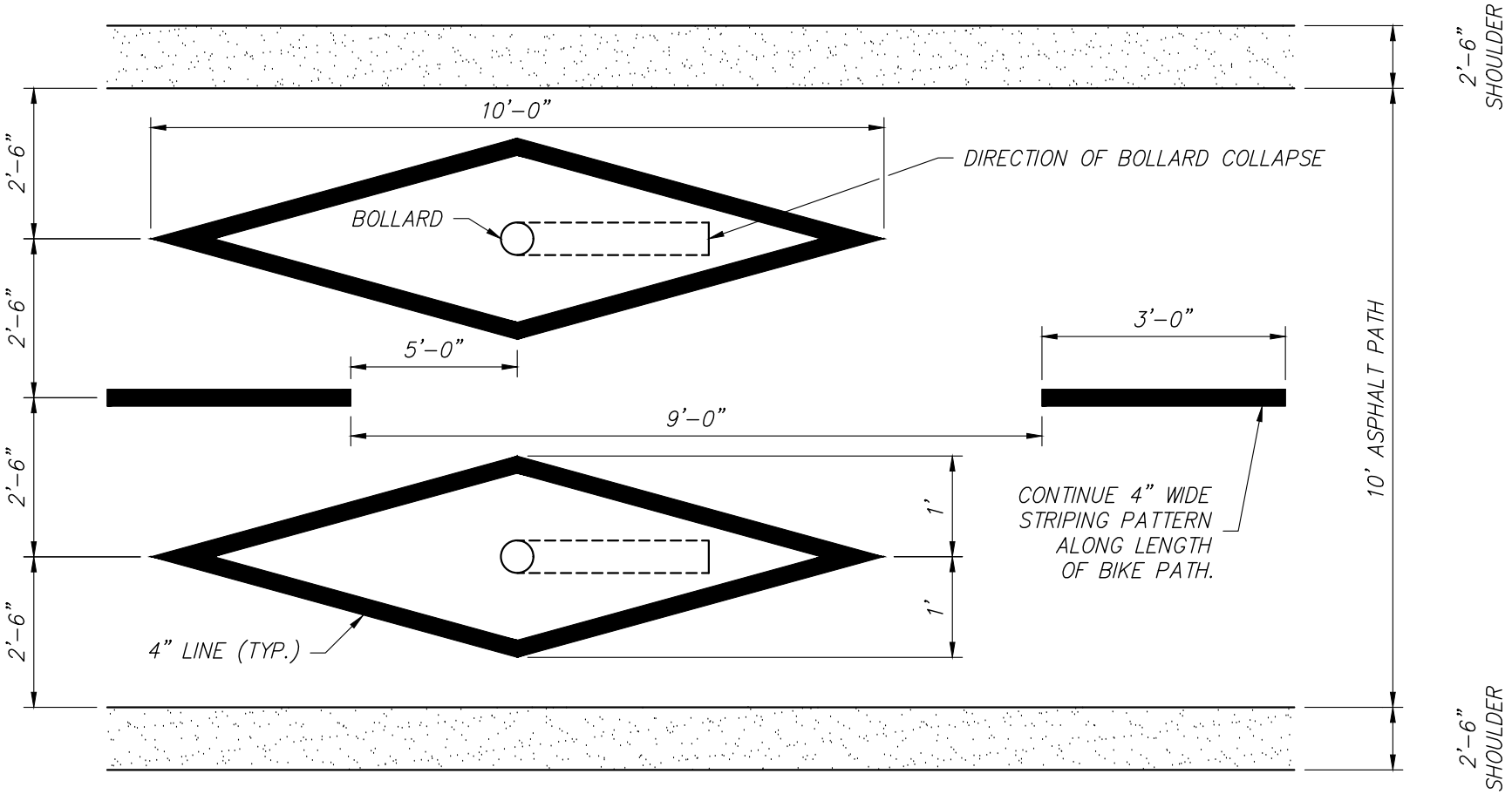

NOTES:

1. STRIPING SHALL CONFORM W/ CALTRANS STANDARD PLANS
2. STRIPING TO BE YELLOW.

CITY OF LINCOLN
ENGINEERING DEPARTMENT

BIKE PATH STRIPING/ BOLLARD INSTALLATION

REVISIONS:	DATES:	APPROVED:
		CITY ENGINEER DATE

SCALE: NONE
DATE: SEPTEMBER 2019
DRAWN BY: C.G.

LSC-22

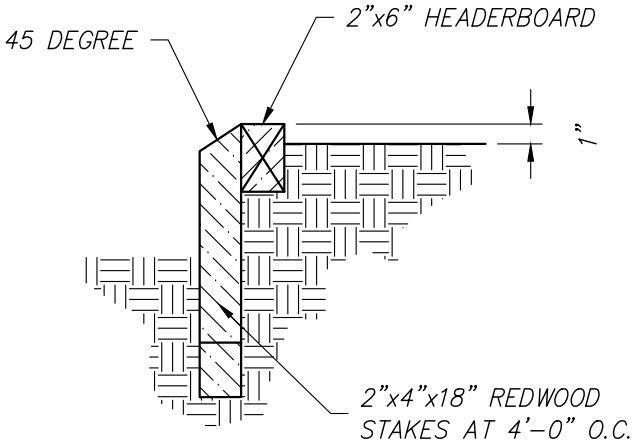

SECTION

TOP VIEW

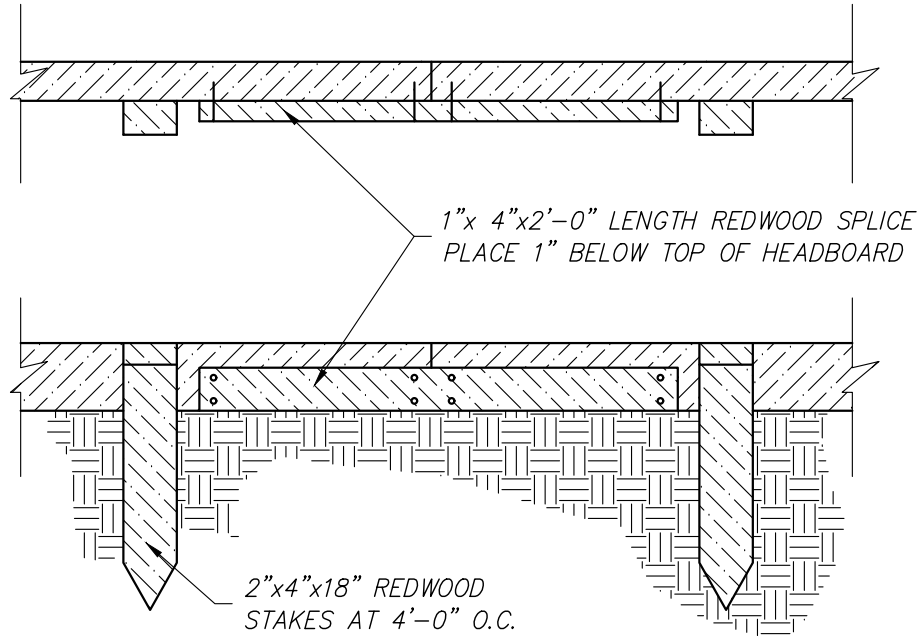

SPLICE DETAIL

NOTES:

1. USE TWO 1"x6" REDWOOD ON ALL CURVES (WHERE NECESSARY).
2. INSTALL ALL STAKES AND SPLICES ON PLANTING SIDE OF HEADER BOARD.
3. ALL NAILS SHALL BE GALVANIZED.
4. ALL LUMBER SHALL BE REDWOOD, ROUGH CONSTRUCTION HEART GRADE IN ACCORDANCE TO CALIFORNIA REDWOOD ASSOCIATION GRADING RULES.

CITY OF LINCOLN
ENGINEERING DEPARTMENT

REDWOOD HEADERBOARD

REVISIONS:	DATES:	APPROVED:
		CITY ENGINEER DATE

SCALE: NONE
DATE: SEPTEMBER 2019
DRAWN BY: C.G.

LSC-23

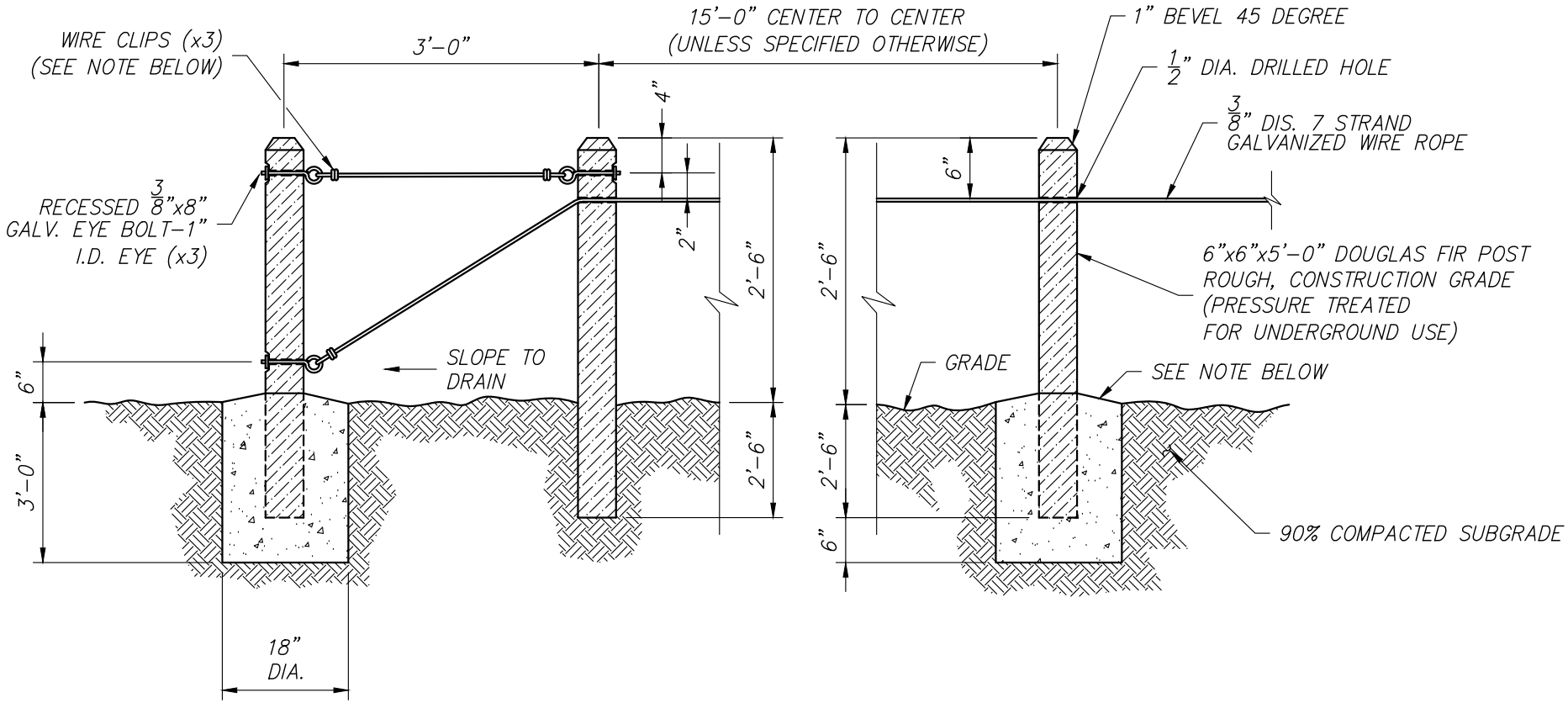

TERMINAL POST ANCHOR DETAIL

LINE POST DETAIL

NOTES:

1. *PROVIDE CONCRETE FOOTINGS AT ALL END POSTS, AT ALL BENDS AND AS SPECIFIED ON APPROVED PLANS.*

2. *USE 3/8"x 2" GALVANIZED WIRE ROPE CLIPS FOR CONNECTION AND SPLICES. ALL CLIPS SHALL BE PLACED WITH NUTS FACING DOWNWARD.*

CITY OF LINCOLN
ENGINEERING DEPARTMENT

POST & CABLE

REVISIONS:	DATES:	APPROVED:
		CITY ENGINEER DATE

SCALE: NONE
DATE: SEPTEMBER 2019
DRAWN BY: C.G.

LSC-24

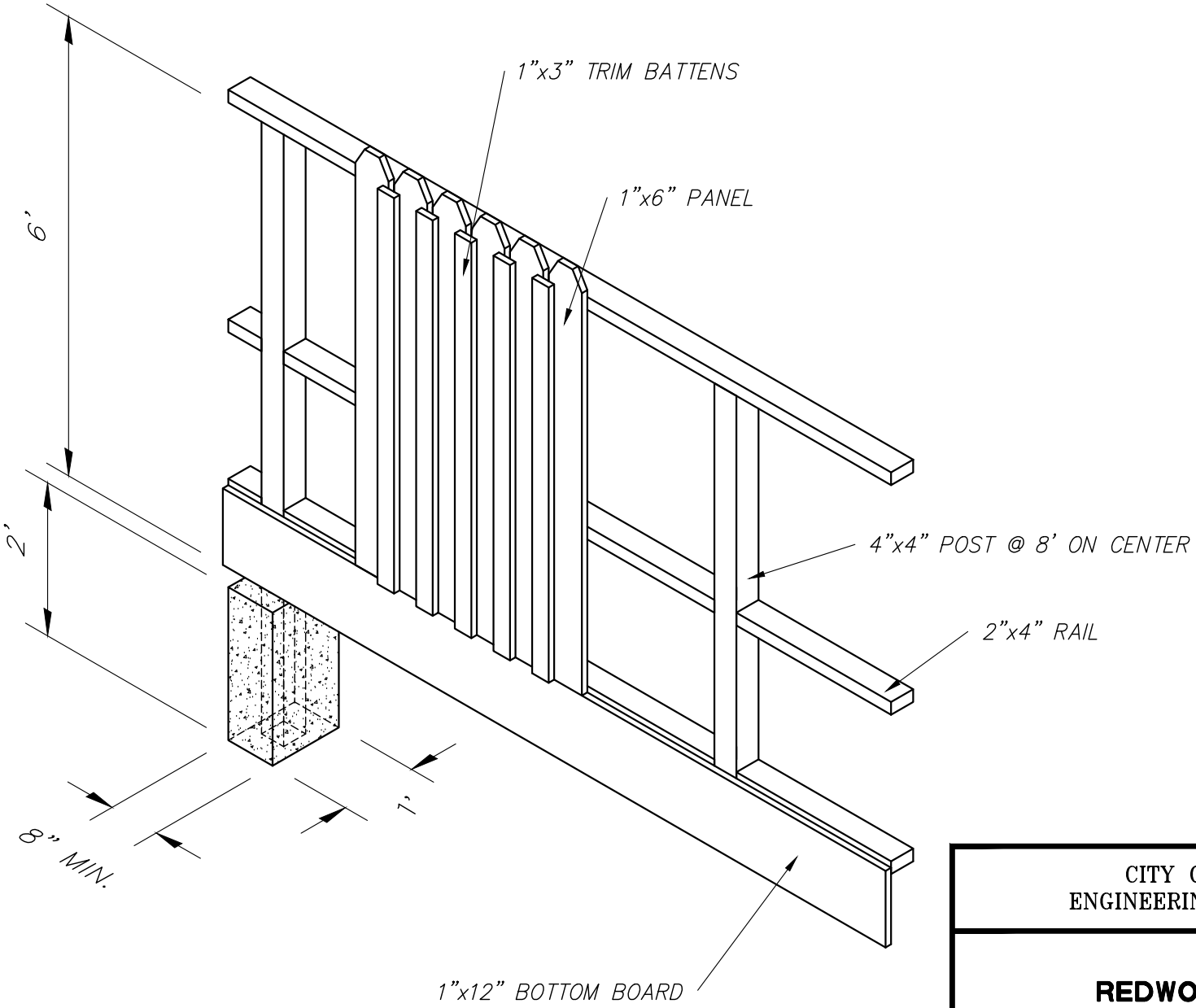

CITY OF LINCOLN
ENGINEERING DEPARTMENT

REDWOOD FENCE

REVISIONS:	DATES:	APPROVED:
		CITY ENGINEER DATE

SCALE: NONE
DATE: SEPTEMBER 2019
DRAWN BY: C.G.

LSC-25

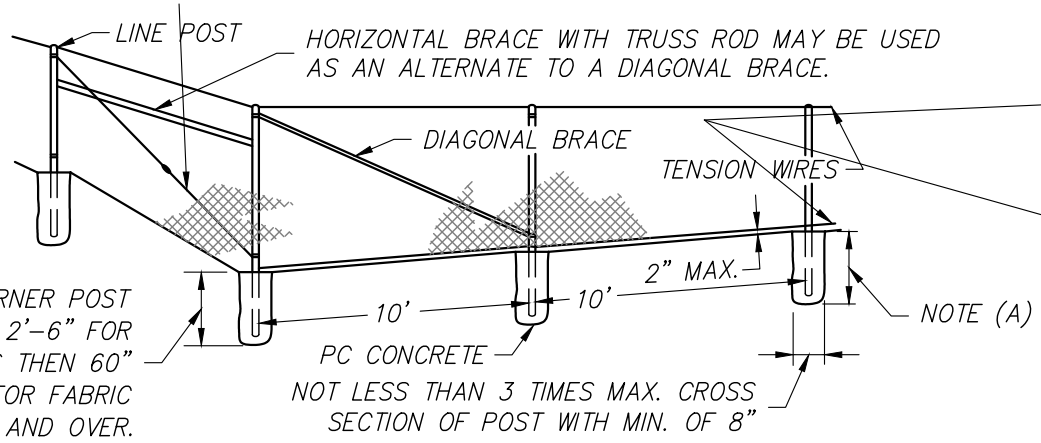

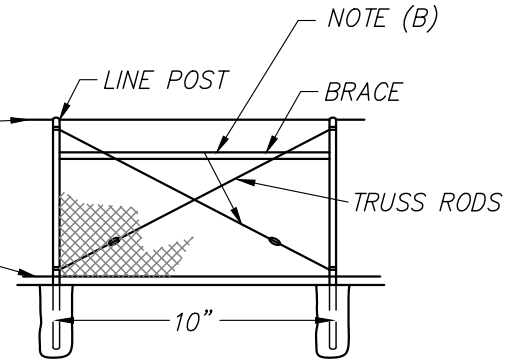

LINE POSTS AT 1000'MAX. INTERVALS BRACED AND TRUSSED IN BOTH DIRECTIONS EXCEPT THAT THIS BRACING AND TRUSSING MAY BE OMITTED WHEN THE FABRIC IS STRETCHED BY EQUIPMENT.

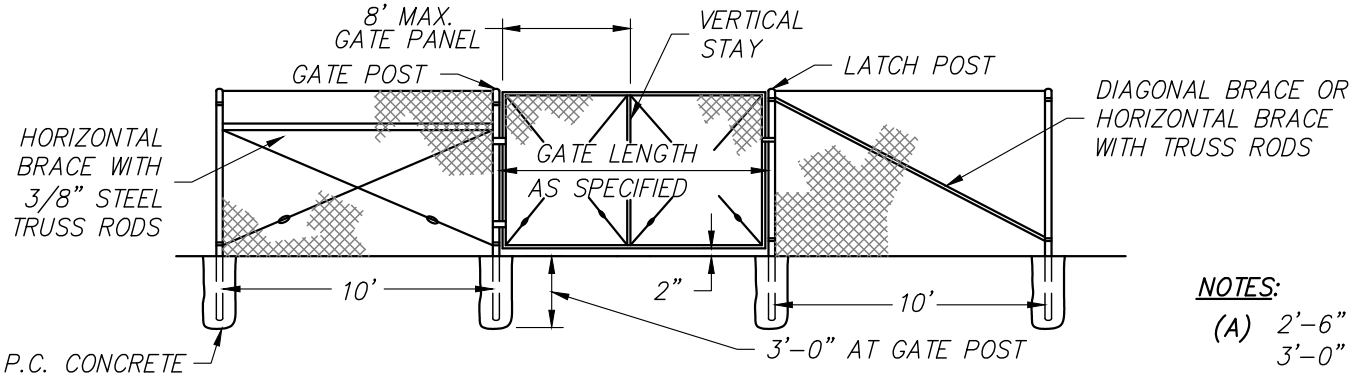

TYPE CL-4=48" FABRIC (11 GUAGE)
TYPE CL-6=72" FABRIC (9 GUAGE)

NOTES:

(A) 2'-6" FOR FABRIC LESS THAN 60" HIGH
3'-0" FOR FABRIC 60" AND OVER

(B) BRACE TO BE REMOVED AFTER ALL OTHER FENCE CONSTRUCTION IS COMPLETED UNLESS OTHERWISE DIRECTED BY THE ENGINEER.

NOTES:

1. THE ABOVE TABLE SHOWS EXAMPLES OF POST AND BRACE SECTIONS WHICH MAY COMPLY WITH THE SPECIFICATIONS.
2. SECTIONS SHOWN IN THE TABLES MUST ALSO COMPLY WITH THE STRENGTH REQUIREMENTS AND OTHER PROVISIONS OF THE SPECIFICATIONS.
3. OTHER SECTIONS WHICH COMPLY WITH THE STRENGTH REQUIREMENTS AND OTHER PROVISIONS OF THE SPECIFICATIONS MAY BE USED ON APPROVAL OF THE CITY ENGINEER.
4. OPTIONS EXERCISED SHALL BE UNIFORM ON ANY ONE PROJECT.
5. DIMENSIONS SHOWN ARE NOMINAL.
6. TYPICAL MEMBER DIMENSIONS AND GATE POST TABLES DETAIL (LSC-27A).

CITY OF LINCOLN
ENGINEERING DEPARTMENT

CHAIN LINK FENCE
DETAIL ONE

REVISIONS:	DATES:	APPROVED:
		CITY ENGINEER DATE

SCALE: NONE
DATE: SEPTEMBER 2019
DRAWN BY: C.G.

LSC-26

TYPICAL MEMBER DIMENSIONS

FENCH HEIGHT	LINE POSTS			END,LATCH & CORNER POSTS			BRACES			
	ROUND (I.D.)	H	ROLL FORMED	ROUND (I.D.)	ROLL FORMED		ROUND (I.D.)	H	ROLL FORMED	
					⊔	⊓ ⊓			⊔	⊓
LESS THEN 6'	1-1/2"	1-7/8"x1-5/8"	1-3/4"x1-3/4"	2"	3-1/2"x3-1/2"	2"x1-3/4"	1-1/4"	1-1/2"x1-5/16"	1-5/8"x1-1/4"	1-3/4"x1-1/4"
OVER 6'	2"	2-1/4"x2"	2"x1-3/4"	2"x2-1/2"	3-1/2"x3-1/2"	2"x1-3/4"	1-1/4"	1-1/2"x1-5/16"	1-5/8"x1-1/4"	1-3/4"x1-1/4"

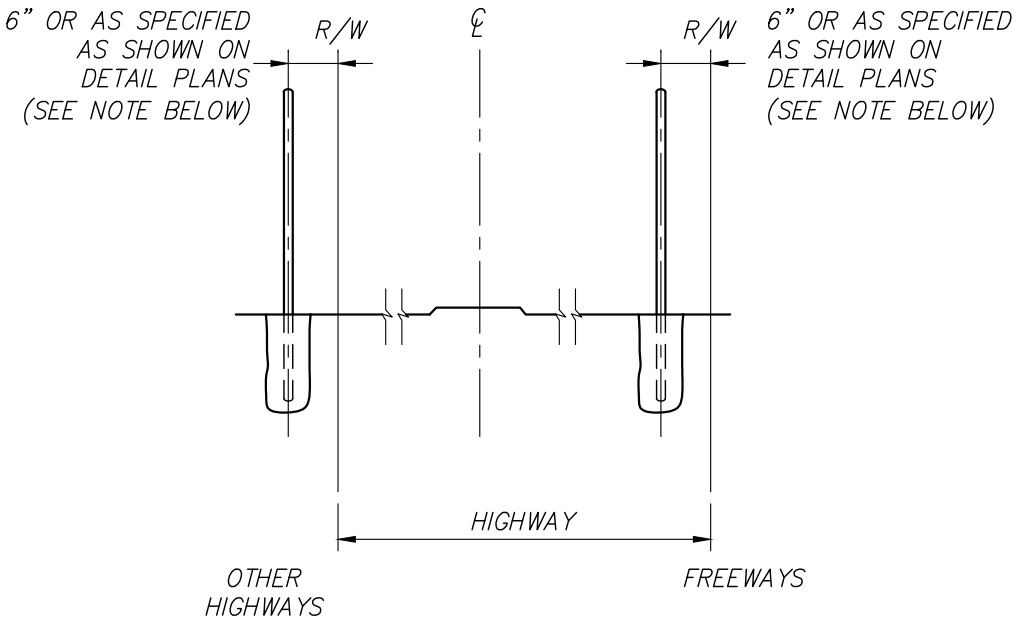

NOTE: OFFSET TO BE 2'-0" AT MONUMENT LOCATIONS, MEASURED AT RT. ANGLE TO R/W LINES. TAPER TO ACHIEVE OFFSET TO BE AT LEAST 20' LONG.

GATE POST

FENCE HEIGHT	GATE WIDTHS	NOMINAL I.D.	WEIGHT PER FOOT
6'-0" AND LESS	UP THRU 6'	2-1/2"	4.95
	OVER 6' THRU 12'	4"	10.79
	OVER 12' THRU 18'	5"	14.62
	OVER 18' TO 24' MAX.	6"	18.97
OVER 6'	UP THRU 6'	3"	7.58
	OVER 6' THRU 12'	5"	14.62
	OVER 12' THRU 18'	6"	18.97
	OVER 18' TO 24' MAX.	8"	28.55

NOTE: ABOVE POST DIMENSIONS AND WEIGHTS ARE MINIMUMS LARGER SIZES MAY BE USED ON APPROVAL OF ENGINEER.

CITY OF LINCOLN
ENGINEERING DEPARTMENT

CHAIN LINK FENCE DETAIL TWO

REVISIONS:	DATES:	APPROVED:
		CITY ENGINEER DATE

SCALE: NONE
DATE: SEPTEMBER 2019
DRAWN BY: C.G.

LSC-27

[THIS PAGE INTENTIONALLY LEFT BLANK]